ST49C101A-XX

High Frequency Clock Multiplier

January 1999 -3

FEATURES

- Mask Programmable Analog Phase Locked Loop
- Up to 200MHz Operation
- Preprogrammed Multiplication Factors of 2, 3, 4, 5, 6, 8, 10 and 12X
- Low Output Jitter
- Replace Expensive High Frequency Oscillator
- Crystal Oscillator Circuit On Chip
- Low Power Single Supply 5V or 3.3V CMOS Technology
- Small 8 Lead SOIC Package

APPLICATIONS

- Voltage Controlled Crystal Oscillator (VCXO)
- System Clock Multiplication in:
  - Computer Systems
  - Telecommunications Systems
  - Set-top Boxes

GENERAL DESCRIPTION

The ST49C101A-XX is a mask programmable monolithic analog phase locked loop device, designed to replace existing high frequency crystal oscillator with a low frequency crystal. The high performance ST49C101A-XX provides low jitter clock output and operates up to 180 MHz. at 3.3 volts power supply. The ST49C101A-XX supports preprogrammed multiplication factors of 2,3,4,5,6,8,10 and 12X.

ORDERING INFORMATION

Part Number.	Package	Operating Temperature Range
ST49C101ACF8-01	8 Lead 150 Mil Jedec SOIC	0°C to 70°C
ST49C101ACF8-03	8 Lead 150 Mil Jedec SOIC	0°C to 70°C
ST49C101ACF8-05	8 Lead 150 Mil Jedec SOIC	0°C to 70°C
ST49C101ACF8-06	8 Lead 150 Mil Jedec SOIC	0°C to 70°C
ST49C101ACF8-07	8 Lead 150 Mil Jedec SOIC	0°C to 70°C
ST49C101ACF8-08	8 Lead 150 Mil Jedec SOIC	0°C to 70°C
ST49C101ACF8-09	8 Lead 150 Mil Jedec SOIC	0°C to 70°C
ST49C101ACF8-10	8 Lead 150 Mil Jedec SOIC	0°C to 70°C
ST49C101ACF8-13	8 Lead 150 Mil Jedec SOIC	0°C to 70°C
ST49C101ACF8-15	8 Lead 150 Mil Jedec SOIC	0°C to 70°C
Consult Factory	Die	0°C to 70°C

EXAR Corporation, 48720 Kato Road, Fremont, CA 94538 • (510) 668-7000 • FAX (510) 668-7017

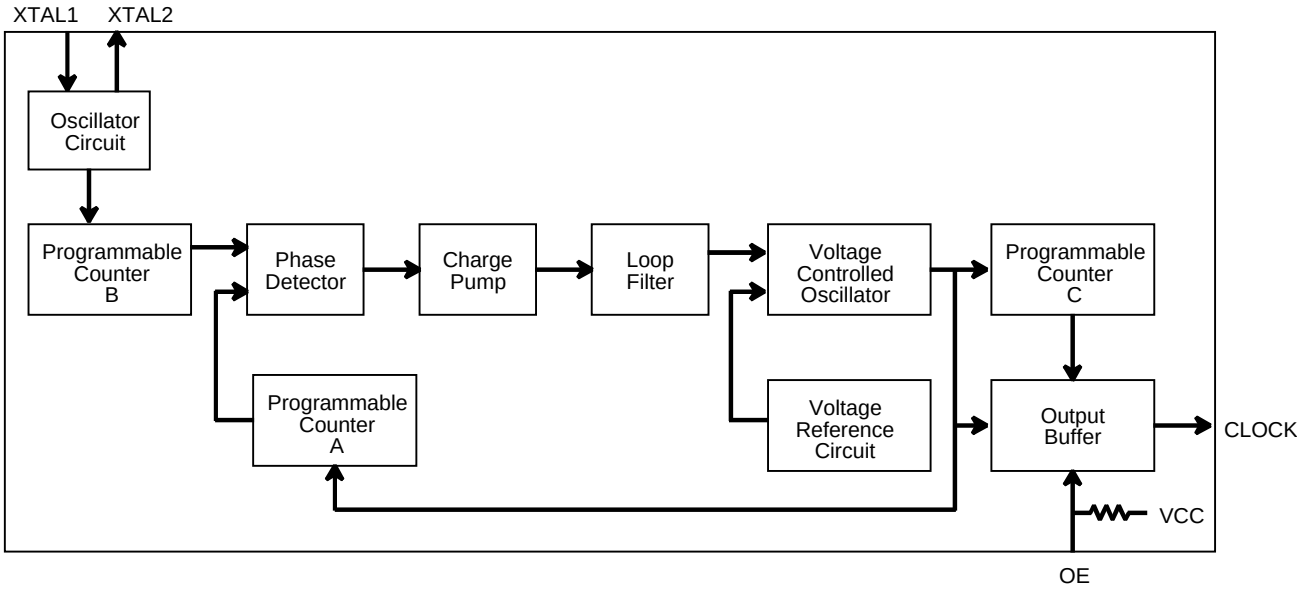

Figure 1. Block Diagram

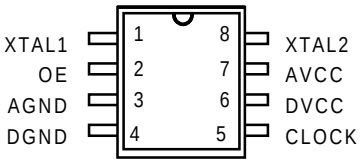

8 Pin SOIC (Jedec, 0.150")

PIN DESCRIPTION

Pin #	Symbol	Type	Description
1	XTAL1	I	**Crystal or External Clock Input.** A crystal can be connected to this pin and XTAL2 pin to generate internal phase locked loop reference clock. For external clock, XTAL2 is left open or used as buffered clock output.
2[1]	OE	I	**Clock Output Enable (Active high).** CLOCK output is three stated when this pin is low. Connect to DVCC for normal operation.
3	AGND	O	**Analog Ground.**
4	DGND	O	**Digital Ground.**
5	CLOCK	O	**Programmed Output Clock.**
6	DV_{CC}	I	**Positive Supply Voltage.** Single +5 or 3.3 volts.
7	AV_{CC}	I	**Analog Supply Voltage.** Single +5 or 3.3 volts.
8	XTAL2	O	**Crystal Output.**

Note: *[1]Has internal weak pull-up resistor*

MULTIPLICATION FACTOR AND OUTPUT FREQUENCY SELECTION

The ST49C101A-XX contains an analog phase locked loop (PLL) circuit with digital closed loop dividers and a final output divider to achieve the desired dividing ratios for the clock output. The preprogrammed multiplication factor and output frequency are shown on Table 1. The accuracy of the output frequency produced by the ST49C101A-XX depends on its input frequency and multiplication factor.

APPLICATIONS

Two application examples are shown in Figure 2 and 3. Figure 2 shows a lower cost high frequency crystal oscillator circuit using the ST49C101-xx to increase the fundamental crystal frequency. The crystal Y1 is connected to XTAL1 and XTAL2 pins to use the internal oscillator circuit. The oscillator provides the reference clock to the PLL circuit for clock rate multiplication. Figure 3 shows a similar circuit using external clock input on XTAL1 pin instead.

If a sinewave is used for external clock, it may be necessary to AC couple the signal with a 0.047uF capacitor to XTAL1 pin so that the internal circuitry can establish the proper bias. Also, keep the peak-to-peak signal, at XTAL pin, above ground level (AGND) and below AVCC.

As a general board layout rule, it is recommended to use two 0.01µF bypass capacitors on DVCC and AVCC power supply pins, and put them as closely as possible to the chip.

Table 1. Preprogrammed Options

ST49C101A-XX	Factor	Max. Output Frequency[1]	VCC[1]
ST49C101A-01	12	200 MHz 140 MHz	5.0 V 3.3 V
ST49C101A-03	8	200 MHz 140 MHz	5.0 V 3.3 V
ST49C101A-05	6	200 MHz 140 MHz	5.0 V 3.3 V
ST49C101A-06	4	120 MHz	5.0 or 3.3 V
ST49C101A-07	3	80 MHz 70 MHz	5.0 V 3.3 V
ST49C101A-08	2	80 MHz 70 MHz	5.0 V 3.3 V
ST49C101A-09	5	200 MHz 140 MHz	5.0 V 3.3 V
ST49C101A-10	10	180 MHz	3.3 V
ST49C101A-13	8	180 MHz	3.3 V
ST49C101A-15	6	180 MHz	3.3 V

Notes

[1]See AC electrical characteristics for maximum operating frequency.

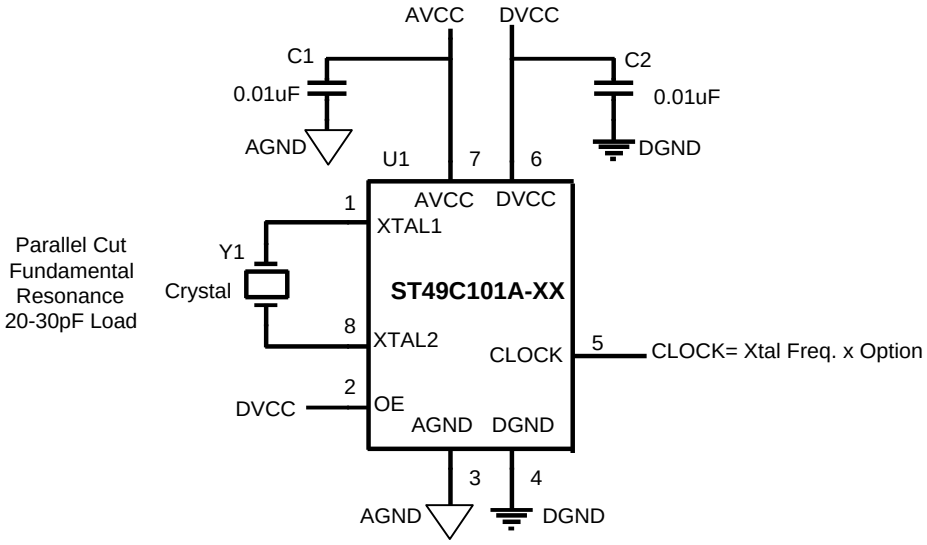

Figure 2. High Frequency Crystal Oscillator Using a Crystal for Reference.

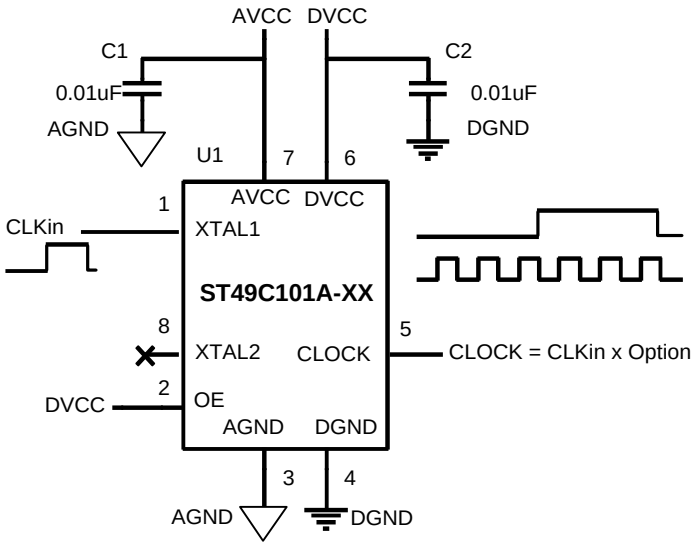

Figure 3. High Frequency Clock Rate Multiplication Using External Clock.

DC ELECTRICAL CHARACTERISTICS

Test Conditions: T_A = 25°C, V_{CC} = 5.0V + 10%, Operating Temperature Range 0°C to 70°C Unless Otherwise Specified

Symbol	Parameter	Min.	Typ.	Max.	Unit	Conditions
V_{IL}	Input Low Level			0.8	V	
V_{IH}	Input High Level	2.0			V	
V_{OL}	Output Low Level			0.5	V	I_{OL} = 8.0 mA
V_{OH}	Output High Level	2.8			V	I_{OH} = 8.0 mA
I_{IL}	Input Low Current			-100	µA	OE Pin only
I_{IH}	Input High Current			1	µA	V_{IN}=$V_{CC,}$ OE Pin only
I_{CC}	Operating Current		35	50	mA	No Load. CLOCK=100MHz
R_{IN}	Input Pull-up Resistance	75	110	155	kΩ	

AC ELECTRICAL CHARACTERISTICS

Test Conditions: T_A = 25°C, V_{CC} = 5.0V + 10%, Operating Temperature Range 0°C to 70°C Unless Otherwise Specified

Symbol	Parameter	Min.	Typ.	Max.	Unit	Conditions
T1,T2	CLOCK Rise/Fall Time		1.5	3	ns	Load=30 pF, 0.2 V_{CC} - 0.8 V_{CC}
$\frac{T4}{T4 + T5}$	Duty Cycle	45	50	55	%	V_{CC}/2 Switch Point Up To 100MHz, Load = 20pF
$\frac{T4}{T4 + T5}$	Duty Cycle	40	50	60	%	V_{CC}/2 Switch Point 100-150MHz, 95Ω (AC Terminated)
T3	Jitter 1 Sigma		±0.4	±1	%	Of Period
T3	Jitter Absolute		±1	±3	%	Of Period
T_{IN}	Input Reference Frequency	12	20	30	MHz	
T_{OUT}	Output Frequency	50		200	MHz	ST49C101A-01
		50		200	MHz	ST49C101A-03
		50		200	MHz	ST49C101A-05
		50		120	MHz	ST49C101A-06
		25		80	MHz	ST49C101A-07
		25		80	MHz	ST49C101A-08
		50		200	MHz	ST49C101A-09

DC ELECTRICAL CHARACTERISTICS

Test Conditions: T_A = 25°C, V_{CC} =3.3V +/- 10%, Operating Temperature Range 0°C to 70°C Unless Otherwise Specified

Symbol	Parameter	Min.	Typ.	Max.	Unit	Conditions
V_{IL}	Input Low Level			0.8	V	
V_{IH}	Input High Level	2.0			V	
V_{OL}	Output Low Level			0.5	V	I_{OL} = 4.0mA
V_{OH}	Output High Level	2.0			V	I_{OH} = 4.0mA
I_{IL}	Input Low Current			-100	µA	OE Pin Only
II_H	Input High Current			1	µA	V_{IN}=VCC, OE Pin only
I_{CC}	Operating Current		22	40	mA	No Load. CLOCK=100MHz
R_{IN}	Input Pull–up Resistance	75	110	155	kΩ	

AC ELECTRICAL CHARACTERISTICS

Test Conditions: T_A = 25°C, V_{CC} =3.3V +/- 10%, Operating Temperature Range 0°C to 70°C Unless Otherwise Specified

Symbol	Parameter	Min.	Typ.	Max.	Unit	Conditions
T1, T2	CLOCK Rise/Fall Time		2	4	ns	Load = 30 pF, 0.2 V_{CC} - 0.8 V_{CC}
$\frac{T4}{T4+T5}$	Duty Cycle	45	50	55	%	V_{CC}/2 switch point up to 100MHz, Load = 30 pF
$\frac{T4}{T4+T5}$	Duty Cycle	40	50	60	%	V_{CC}/2 switch point 100-150MHz, 95Ω (AC Terminated)
T3	Jitter 1 Sigma		± 0.4	± 1	%	Of Period
T3	Jitter Absolute		± 1	± 3	%	Of Period
T_{IN}	Input Reference Frequency	12	20	30	MHz	
T_{OUT}	Output Frequency	50		140	MHz	ST49C101A-01
		50		140	MHz	ST49C101A-03
		50		140	MHz	ST49C101A-05
		50		150	MHz	ST49C101A-05 at V_{CC}=3.13V min.
		50		120	MHz	ST49C101A-06
		25		70	MHz	ST49C101A-07
		25		70	MHz	ST49C101A-08
		50		140	MHz	ST49C101A-09
		25		180	MHz	ST49C101A-10 at V_{CC}=3.13V min.
		25		180	MHz	ST49C101A-13 at V_{CC}=3.13V min.
		25		180	MHz	ST49C101A-15 at V_{CC}=3.13V min.

ABSOLUTE MAXIMUM RATINGS

Supply Range . . . . . 7 V
Voltage at Any Pin . . . . GND-0.3V to V_{CC} +0.3V
Operating Temperature . . . . . 0°C to +70°C
Storage Temperature . . . . . -40°C to +150°C
Package Dissipation 500mW

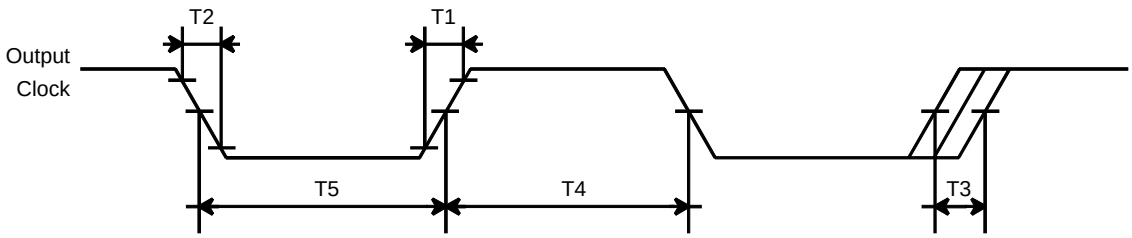

Figure 4. Timing Diagram

8 LEAD SMALL OUTLINE
(150 MIL JEDEC SOIC)

Rev. 1.00

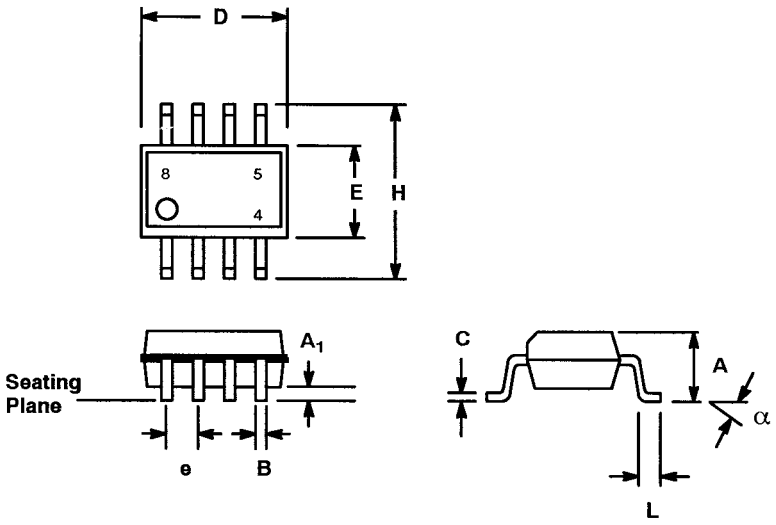

SYMBOL	INCHES		MILLIMETERS	
	MIN	MAX	MIN	MAX
A	0.053	0.069	1.35	1.75
A_1	0.004	0.010	0.10	0.25
B	0.013	0.020	0.33	0.51
C	0.007	0.010	0.19	0.25
D	0.189	0.197	4.80	5.00
E	0.150	0.157	3.80	4.00
e	0.050 BSC		1.27 BSC	
H	0.228	0.244	5.80	6.20
L	0.016	0.050	0.40	1.27
α	0°	8°	0°	8°

Note: The control dimension is the millimeter column

NOTICE

EXAR Corporation reserves the right to make changes to the products contained in this publication in order to improve design, performance or reliability. EXAR Corporation assumes no responsibility for the use of any circuits described herein, conveys no license under any patent or other right, and makes no representation that the circuits are free of patent infringement. Charts and schedules contained here in are only for illustration purposes and may vary depending upon a user's specific application. While the information in this publication has been carefully checked; no responsibility, however, is assumed for in accuracies.

EXAR Corporation does not recommend the use of any of its products in life support applications where the failure or malfunction of the product can reasonably be expected to cause failure of the life support system or to significantly affect its safety or effectiveness. Products are not authorized for use in such applications unless EXAR Corporation receives, in writing, assurances to its satisfaction that: (a) the risk of injury or damage has been minimized; (b) the user assumes all such risks; (c) potential liability of EXAR Corporation is adequately protected under the circumstances.

Copyright 1999 EXAR Corporation
Datasheet January 1999
Reproduction, in part or whole, without the prior written consent of EXAR Corporation is prohibited.