ST2L01

DUAL VOLTAGE REGULATOR

- V_{OUT1} = +3.3V FIXED
- V_{OUT2} = 1.25 TO 3.0V ADJUSTABLE
- GUARANTEED OUTPUT1 CURRENT: 1A
- GUARANTEED OUTPUT2 CURRENT: 1A
- ±2% OUTPUT TOLERANCE (AT 25°C)
- TYPICAL DROPOUT 1.1V (I_{OUT1} = I_{OUT2} =1A)
- INTERNAL POWER AND THERMAL LIMIT
- STABLE WITH LOW ESR OUTPUT CAPACITOR
- OPERATING TEMPERATURE RANGE: 0°C TO 125°C
- AVAILABLE IN PPAK AND SPAK-5L (PowerFlex™) PACKAGE

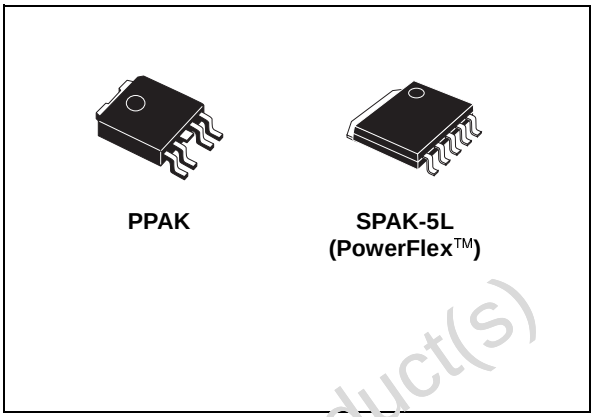

PPAK **SPAK-5L (PowerFlex™)**

DESCRIPTION

Specifically designed for data storage applications, this device integrates two voltage regulators, each one able to supply 1A. It is assembled in PPAK and in a new surface mounting package named SPAK (PowerFlex™) at 5 pins. The first regulator block supply 3.3V to power the Read Channel and Memory Chips requiring this voltage. The second one is an Adjustable output voltage from 1.25V to 3.0V that could power several kind of different micro-controllers.

Both outputs are current limited and overtemperature protected.

The very good thermal performances of the package SPAK with only 2°C/W of Thermal Resistance Junction to Case is important to underline.

Obsolete Product(s) - Obsolete Product(s)

SCHEMATIC DIAGRAM

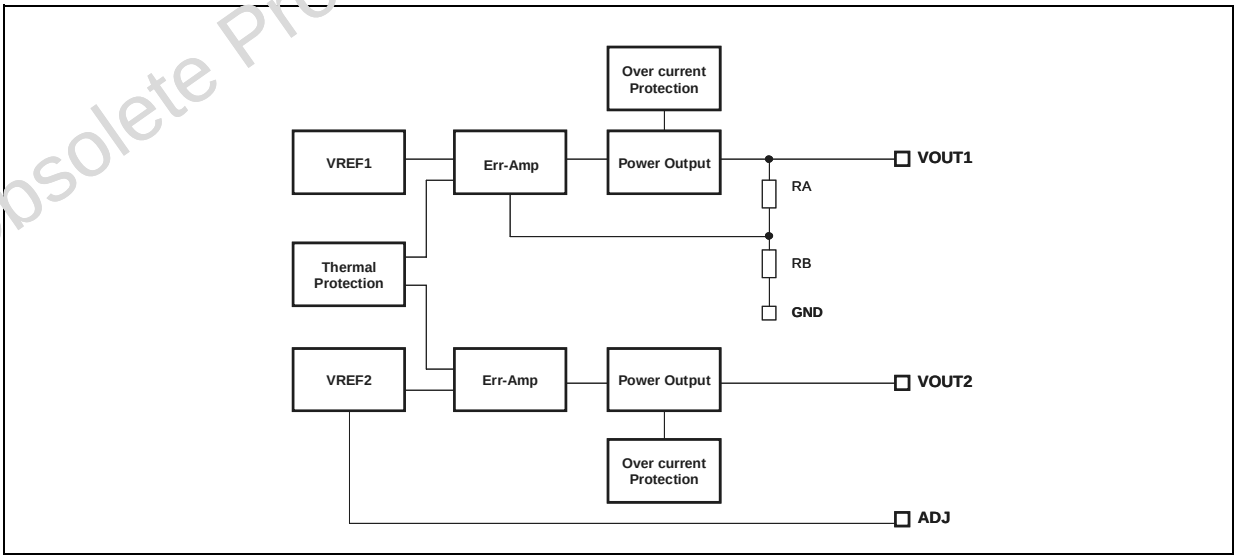

ABSOLUTE MAXIMUM RATINGS

Symbol	Parameter	Value	Unit
V_{IN}	Input Voltage	10	V
V_{ESD}	ESD Tolerance (Human Body Model)	4	KV
T_{stg}	Storage Temperature Range	-55 to +125	°C
T_J	Operating Junction Temperature Range	0 to +125	°C

GENERAL OPERATING CONDITION

Symbol	Parameter	Value	Unit
V_{IN}	Input Voltage	4.75 to 5.25	V
ΔV_{IN}	Input Voltage Ripple	±0.15	V
t_r	Input Voltage Rise Time (10% to 90%)	≥ 1	µs
t_f	Input Voltage Fall Time (90% to 10%)	≥ 1	µs

THERMAL DATA

Symbol	Parameter	SPAK-5L	PPAK	Unit
$R_{thj\text{-}case}$	Thermal Resistance Junction-case	2	8	°C/W

CONNECTION DIAGRAM (top view)

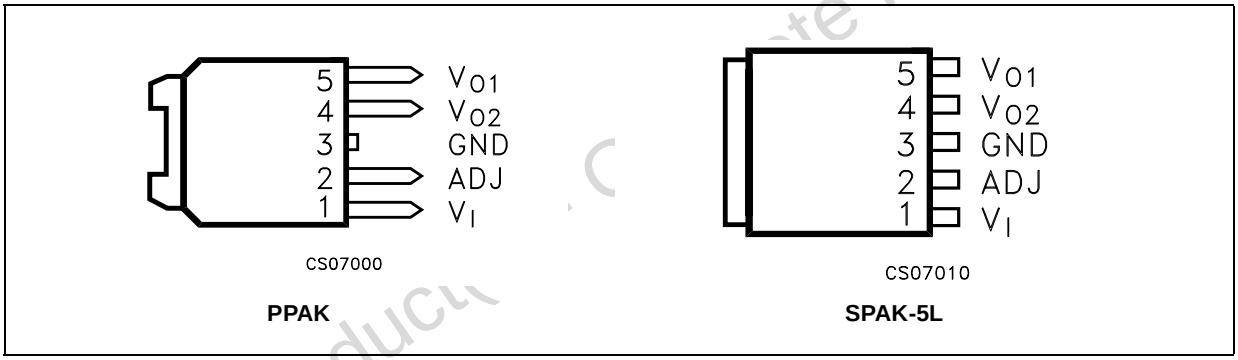

PIN DESCRIPTION

Pin N°	Symbol	Name and Function
1	V_I	Input pin: bypass with a 1µF capacitor to GND
2	ADJ	ADJ pin: resistor divider connection
3	GND	Ground pin
4	V_{O2}	Output Pin: adjustable output voltage; bypass with a 1µF capacitor to GND
5	V_{O1}	Output Pin: fixed (3.3V) output voltage; bypass with a 1µF capacitor to GND

ORDERING INFORMATION

TYPE	SPAK (Power Flex™) 5 leads (*)	PPAK (*)
ST2L01	ST2L01K5	ST2L01PT

(*) Available in Tape & Reel with the suffix "R"

Obsolete Product(s)

TYPICAL APPLICATION CIRCUIT

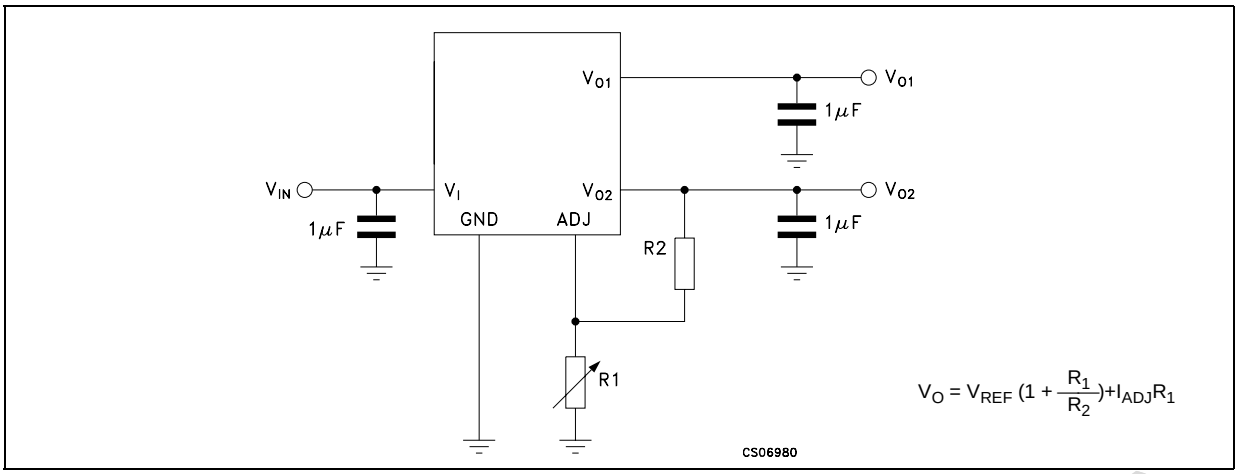

Note:
C_{O1} value could be lowered down to 470nF Ceramic Capacitor (X7R);
C_I, C_{O1} and C_{O2} capacitors must be located not more than 0.5" from the outputs pins of the device.
For more details about Capacitors read the "Application Hints"

ELECTRICAL CHARACTERISTICS OF OUTPUT 1 (V_I=5V, I_{O1}=10mA T_j = 0 to 125°C unless otherwise specified. Typical values are referred at T_j = 25°C, C_I = 1µF (Tantalum), C_{O1} = C_{O1} =1µF (X7R)

Symbol	Parameter	Test Conditions		Min.	Typ.	Max.	Unit
I_I	Input Current	I_{O1} = I_{O2} =0 T_j = 0 to 125°C			15	28	mA
V_{O1}	Output Voltage 1	T_j = 25°C		3.23	3.3	3.37	V
		I_{O1} = 5mA to 1A V_I = 4.75 to 5.25V T_j = 0 to 125°C		3.2	3.3	3.4	
ΔV_{O1}	Line Regulation 1	V_I = 4.75 to 5.25V			0.1	6	mV
ΔV_{OUT1}	Load Regulation 1	I_O = 0.01 to 1A (Note 1)			3	12	mV
V_{D1}	Dropout Voltage 1	I_O = 1A T_j = 0 to 125°C (Note 2)			1.1	1.3	V
t_{TR}	Transient Response	I_O = 10 to 500mA t_{rise} = t_{fall} = 1µs (Note 3, 5)			<1		µs
I_{SC1}	Current Limit 1	R_L = 0 T_j = 0 to 125°C		1			A
I_{O1}	Minimum Load Current 1	T_j = 0 to 125°C (Note 4)		0			mA
SVR1	Supply Voltage Rejection	V_I = 5 ±0.25V I_{O1} = 100 mA T_j = 0 to 125°C (Note 5)	f_I = 100Hz	60	68		dB
			f_I = 1KHz	60	70		
			f_I = 10KHz	50	65		
			f_I = 100KHz	30	38		
	Thermal Regulation	I_O = 1A, t_{PULSE} = 30ms (Note 5)			0.1		%/W
eN1	Output Noise	B= 10Hz to 10KHz (Note 5)			40		µVrms
ΔV_{O1}	Temperature Stability	T_j = 0 to 125°C (Note 5)			0.5		%V_O
ΔV_{O1}	Long Term Stability	T_j = 125°C, 1000Hrs (Note 5)			0.3		%V_O

Note 1: Low duty cycle pulse testing with Kelvin connections are required in order to maintain accurate data
Note 2: Dropout Voltage is defined as the minimum differential voltage between V_I and V_O required to maintain regulation at V_O. It is measured when the output voltage drops 1% below its nominal value.
Note 3: Transient response is defined with a step change in load from 10mA to 500mA as the time from the load step until the output voltage reaches it's minimum value.
Note 4: Minimum load current is defined as the minimum current required at the output in order for the output voltage to maintain regulation.
Note 5: Guaranteed by design, not tested in production.

Obsolete Product(s) - Obsolete Product(s)

ELECTRICAL CHARACTERISTICS OF OUTPUT 2 (V_I=5V, I_{O2}=10mA T_j = 0 to 125°C unless otherwise specified. Typical values are referred at T_j = 25°C, C_I = 1µF (Tantalum), C_{O1} = C_{O1} =1µF (X7R). Refer to "Typical Application Circuit "figure with R_1=R_2=120Ω".

Symbol	Parameter	Test Conditions		Min.	Typ.	Max.	Unit
V_I	Operating Input Voltage	I_{O2} =5mA to 1A T_j = 0 to 125°C		4.5			V
V_{O2}	Output Voltage 2	T_j = 25°C		2.45	2.5	2.55	V
V_{REF}	Reference Voltage (measured between pins 4 and 2)	T_j = 25°C		1.225	1.25	1.275	V
		I_{O1} = 5mA to 1A V_I = 4.75 to 5.25V T_j = 0 to 125°C		1.2125	1.25	1.2875	
ΔV_{O2}	Line Regulation 2	V_I = 4.75 to 5.25V			0.004	0.2	%
ΔV_{O2}	Load Regulation 2	I_O = 0.01 to 1A (Note 1)			0.08	0.4	%
V_{D2}	Dropout Voltage 2	I_O = 1A T_j = 0 to 125°C (Note 2)			1.1	1.3	V
t_{TR}	Transient Response	I_O = 10 to 500mA t_{rise} = t_{fall} = 1µs (Note 3, 5)			<1		µs
I_{SC2}	Current Limit 2	R_L = 0 T_j = 0 to 125°C		1			A
I_{O2}	Minimum Load Current 2	T_j = 0 to 125°C (Note 4)		1			mA
I_{ADJ}	Adjust Pin Current	T_j = 0 to 125°C			35	120	µA
ΔI_{ADJ}	Adjust Pin Current	I_{O1} = 5mA to 1A V_I = 4.75 to 5.25V T_j = 0 to 125°C			0	5	µA
SVR2	Supply Voltage Rejection	V_I = 5 ±0.25V I_{O1} = 100 mA T_j = 0 to 125°C (Note 5)	f_I = 100Hz	70	77		dB
			f_I = 1KHz	70	80		
			f_I = 10KHz	50	65		
			f_I = 100KHz	30	43		
	Thermal Regulation 2	I_O = 1A, t_{PULSE} = 30ms (Note 5)			0.1		%/W
eN2	Output Noise 1	B= 10Hz to 10KHz (Note 5)			30		µVrms
ΔV_{REF}	Temperature Stability	T_j = 0 to 125°C (Note 5)			0.5		$\%V_O$
ΔV_{REF}	Long Term Stability	T_j = 125°C, 1000Hrs (Note 5)			0.3		$\%V_O$

Note 1: Low duty cycle pulse testing with Kelvin connections are required in order to maintain accurate data

Note 2: Dropout Voltage is defined as the minimum differential voltage between V_I and V_O required to maintain regulation at V_O. It is measured when the output voltage drops 1% below its nominal value.

Note 3: Transient response is defined with a step change in load from 10mA to 500mA as the time from the load step until the output voltage reaches it's minimum value.

Note 4: Minimum load current is defined as the minimum current required at the output in order for the output voltage to maintain regulation.

Note 5: Guaranteed by design, not tested in production.

Obsolete Product(s) - Obsolete Product(s)

APPLICATION HINTS

EXTERNAL CAPACITORS

Like any low-dropout regulator, the ST2L01 requires external capacitors for stability. We suggest to solder both capacitors as close as possible to the relative pins (1, 2 and 5).

INPUT CAPACITORS

An input capacitor, whose value is at least 1µF, is required; the amount of the input capacitance can be increased without limit if a good quality tantalum or aluminum capacitor is used.

SMS X7R or Y5V ceramic multilayer capacitors could not ensure stability in any condition because of their variable characteristics with Frequency and Temperature; the use of this capacitor is strictly related to the use of the output capacitors. For more details read the "OUTPUT CAPACITOR SECTION".

The input capacitor must be located at a distance of not more than 0.5" from the input pin of the device and returned to a clean analog ground.

OUTPUT CAPACITOR

The ST2L01 is designed specifically to work with Ceramic and Tantalum capacitors.

Special care must be taken when a Ceramic multilayer capacitor is used.

Special care must be taken when a Ceramic multilayer capacitor is used.

Due to their characteristics they can sometimes have an ESR value lower than the minimum required by the ST2L01 and their relatively large capacitance can change a lot with the ambient temperature.

The test results of the ST2L01 stability using multilayer ceramic capacitors show that a minimum value of 1µF is needed for the adjustable regulator (set to 2.5V). This value can be increased up to 10µF when a tantalum capacitor is used on the input. A higher value C_O can have an ESR lower than the accepted minimum.

When a ceramic capacitor is used on the input the output capacitance must be in the range from 1µF to 2.2µF if C_I=1µF, and from 1µF to 4.7µF if C_I=2.2µF.

The 3.3V regulator stable with a 470nF capacitor. This value can be increased up to 10µF if a tantalum capacitor is used on the input. A higher value C_O can have an ESR lower than the accepted minimum.

When a ceramic capacitor is used in the input the output capacitance must be in the range from 1µF to 2.2µF if C_I=1µF, and from 1µF to 4.7µF if C_I=2.2µF.

Surface-mountable solid tantalum capacitors offer a good combination of small physical size for the capacitance value and ESR in the range needed by the ST2L01. The test results show good stability for both outputs with values of at least 1µF. The value can be increased without limit for even better performance such a transient response and noise.

IMPORTANT; The output capacitor must maintain its ESR in the stable region over the full operating temperature to assure stability. Also, capacitor tolerance and variation with temperature must be considered to assure that the minimum amount of capacitance is provided at all times. For this reason, when a ceramic multilayer capacitor is used, the better choice for temperature coefficient is the X7R type, which holds the capacitance within ±15%. The output capacitor should be located not more than 0.5" from the output pins of the device and returned to a clean analog ground.

ADJUSTABLE REGULATOR

The ST2L01 has a 1.25V reference voltage between the output and the adjustable pins (respectively pin 4 and 2). When a resistor R2 is placed between these two terminals a constant current flows through R2 and down to R1 to set the overall (V_{O2} to GND) output voltage.

Minimum load current is 1mA.

I_{ADJ} is very small (typically 35µA) and constant; in the V_O calculation it can be ignored.

Obsolete Product(s) - Obsolete Product

TYPICAL CHARACTERISTICS (C_I=1µF, C_O=1µF (X7R))

Figure 1 : Input Current vs Temperature

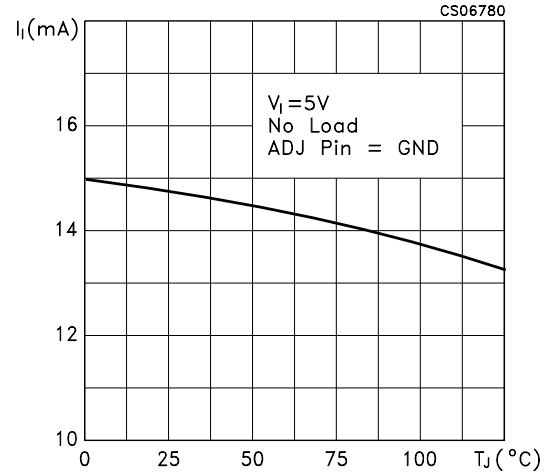

Figure 2 : Input Current vs Input Voltage

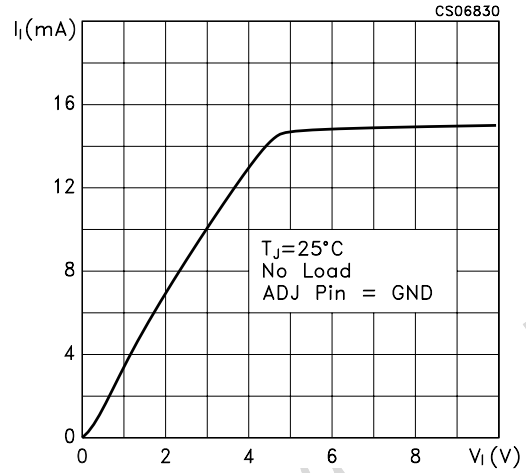

Figure 3 : Output Voltage vs Temperature

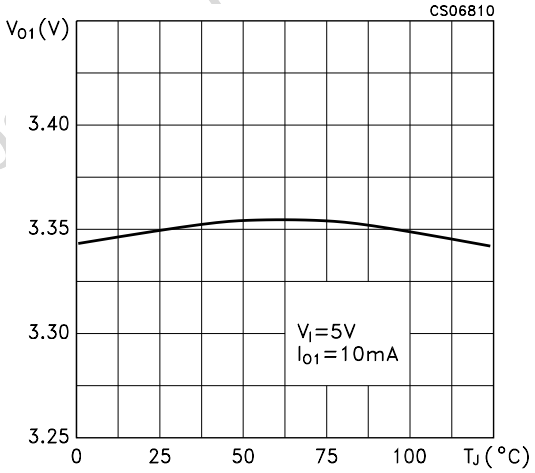

Figure 4 : Load Regulation vs Temperature

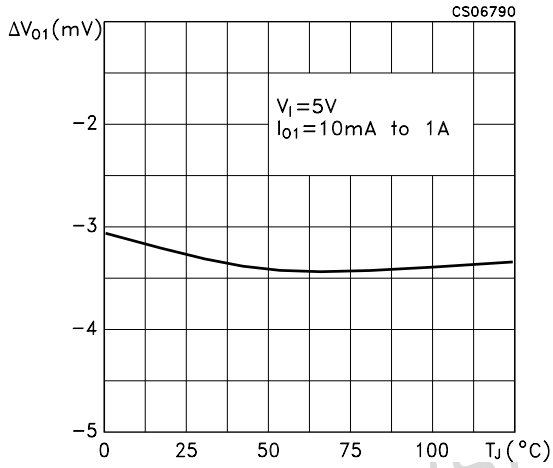

Figure 5 : Output Voltage vs Input Voltage

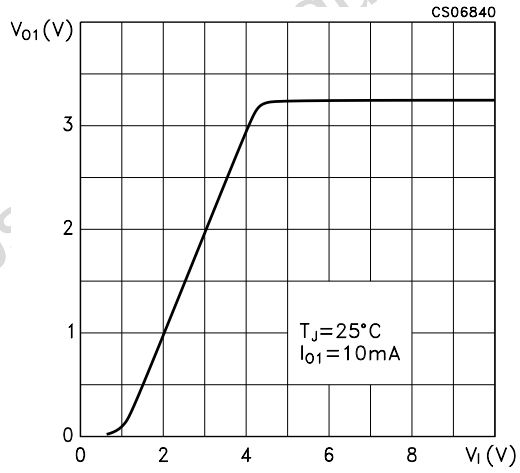

Figure 6 : Dropout Voltage vs Temperature

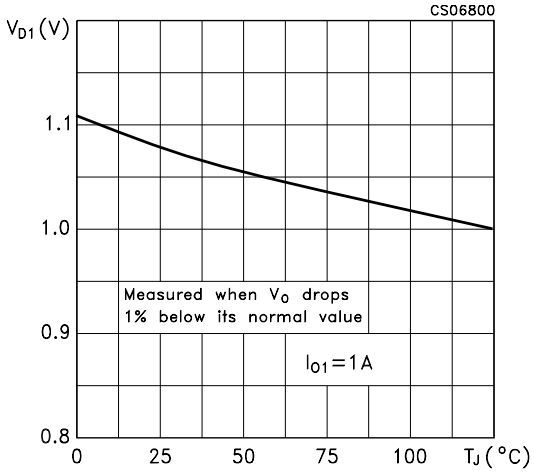

Figure 7 : Line Regulation vs Temperature

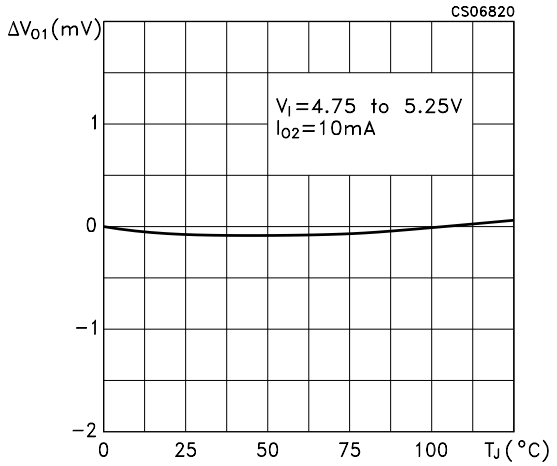

Figure 8 : Supply Voltage Rejection vs Frequency

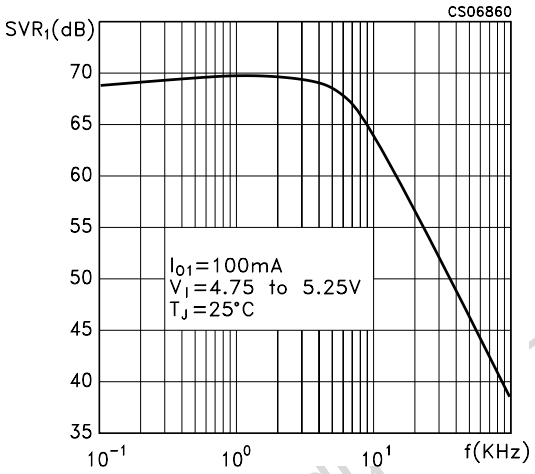

Figure 9 : Supply Voltage Rejection vs Temperature

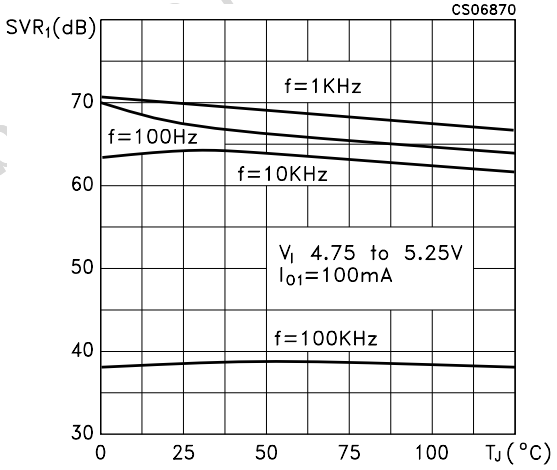

Figure 10 : Dropout Voltage vs Output Current

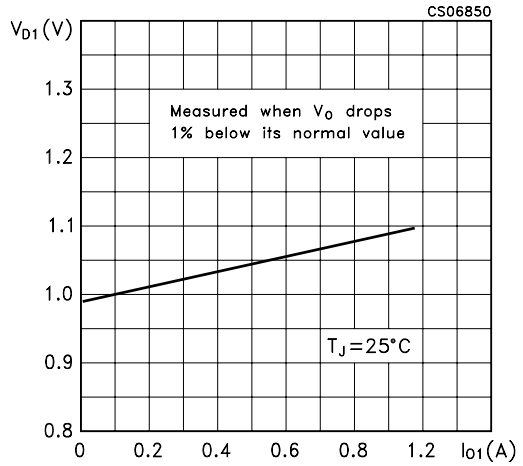

Figure 11 : Reference Voltage vs Temperature

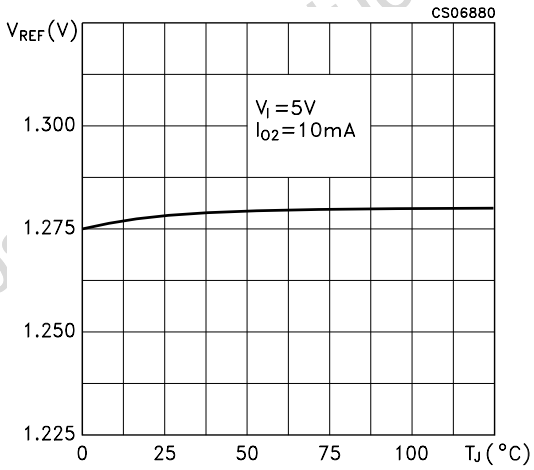

Figure 12 : Output Voltage vs Input Voltage

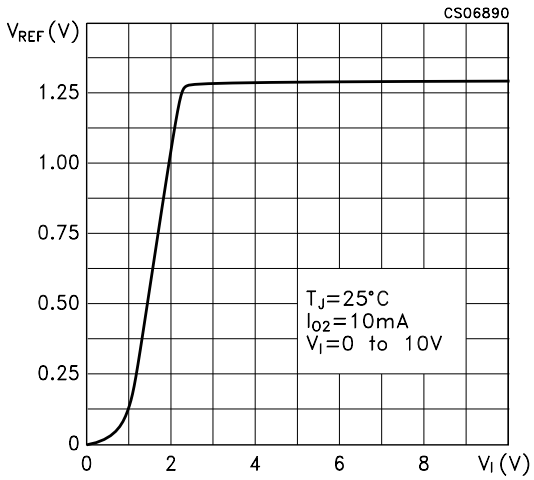

Figure 13 : Line Regulation vs Temperature

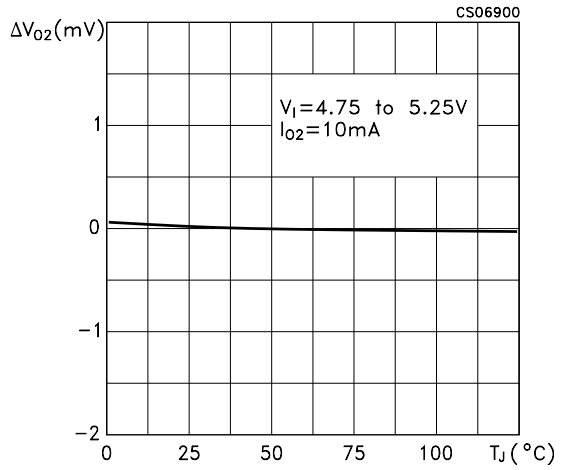

Figure 14 : Load Regulation vs Temperature

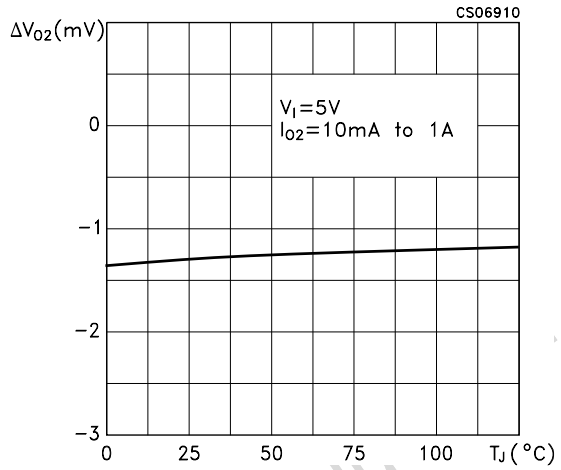

Figure 15 : Supply Voltage Rejection vs Temperature

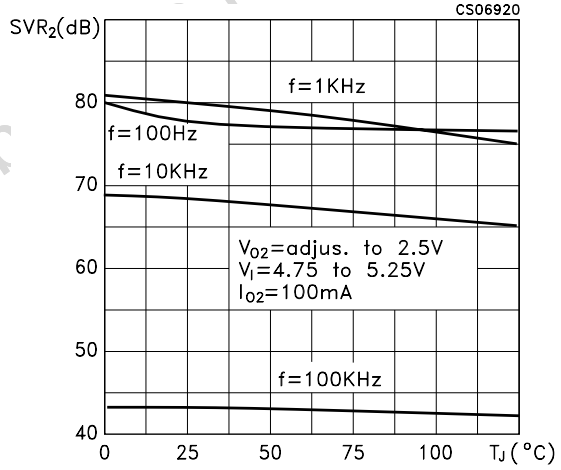

Figure 16 : Dropout Voltage vs Temperature

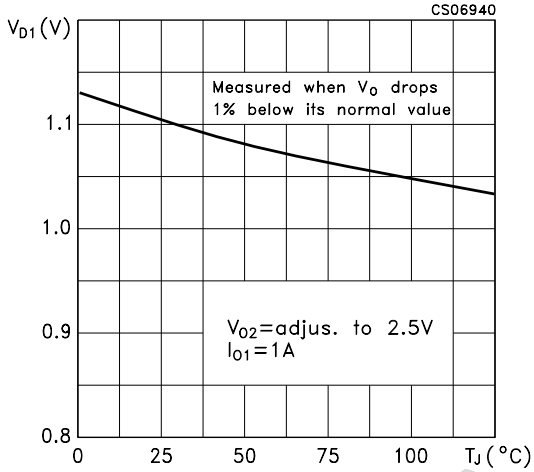

Figure 17 : Dropout Voltage vs Output Current

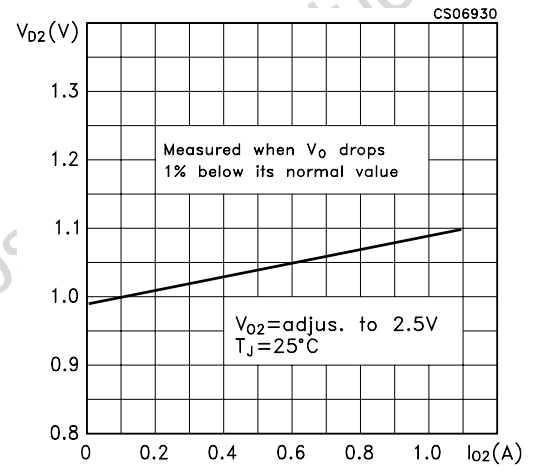

Figure 18 : Supply Voltage Rejection vs Frequency

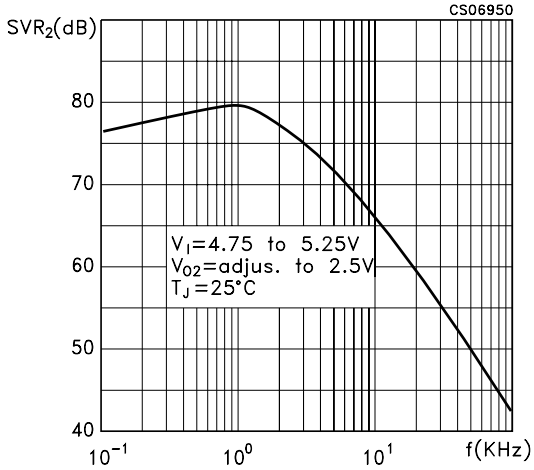

Figure 19 : Adjustable pin vs Temperature

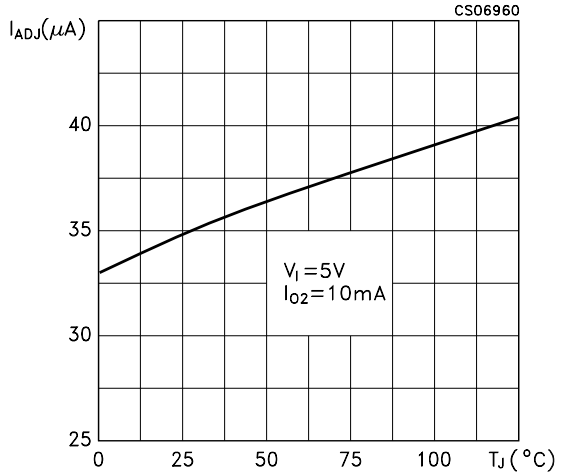

Figure 20 : Minimum Load Current vs Temperature

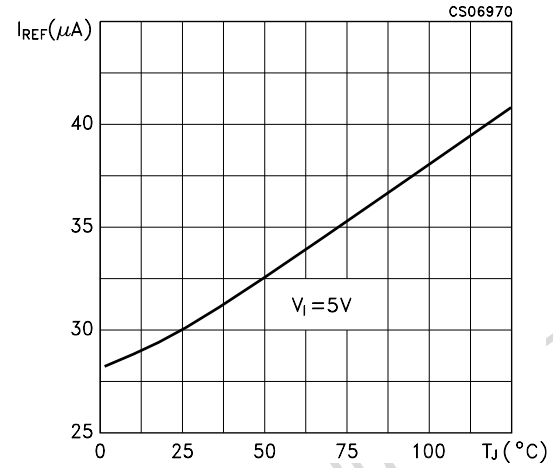

Figure 21 : Load Transient

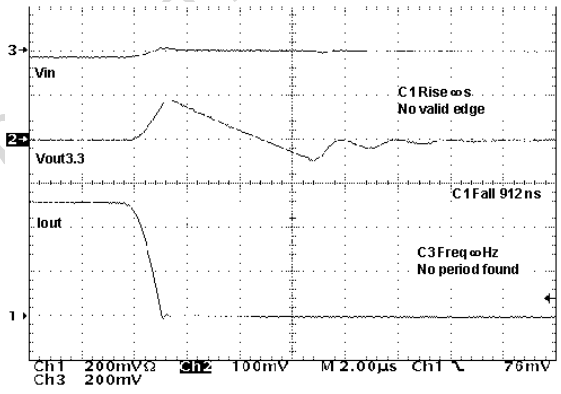

V_I=5V, I_{O1}=500 to 10mA, C_O=1µF(X7R), T_J=25°C

Figure 22 : Load Transient

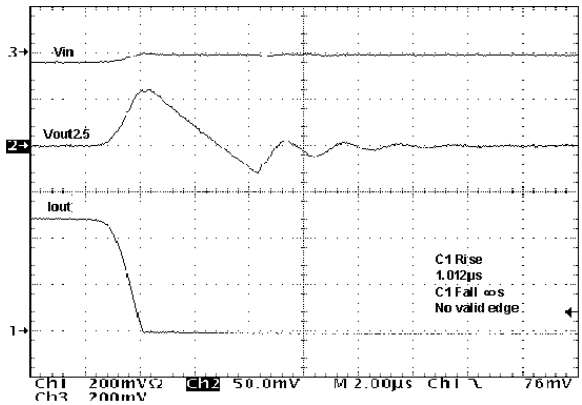

V_I=5V, V_O=adjusted to 2.5V, I_O=500 to 10mA, C_O=1µF(X7R)
T_J=25°C

Figure 23 : Load Transient

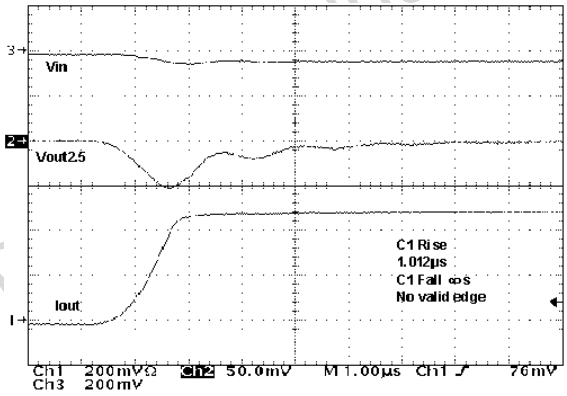

V_I=5V, V_O=adjusted to 2.5V, I_{O2}=10 to 500mA, C_O=1µF(X7R)

Figure 24 : Load Transient

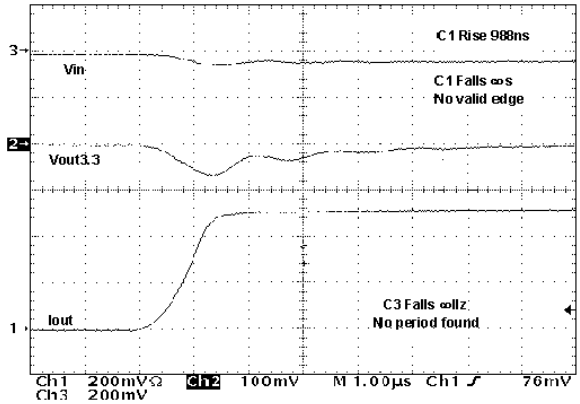

V_I=5V, I_{O1}=10 to 500mA, C_O=1µF(X7R)

Obsolete Product(s) - Obsolete Product(s)

SPAK-5L MECHANICAL DATA

DIM.	mm.			inch		
	MIN.	TYP	MAX.	MIN.	TYP.	MAX.
A	1.78		2.03	0.070		0.080
A2	0.03		0.13	0.001		0.005
C		0.25			0.010	
C1		0.25			0.010	
D	1.02		1.27	0.040		0.050
D1	7.87		8.13	0.310		0.320
F	0.63		0.79	0.025		0.031
G		1.69			0.067	
G1		6.8			0.268	
H1		5.59			0.220	
H2	9.27		9.52	0.365		0.375
H3	8.89		9.14	0.350		0.360
L	10.41		10.67	0.410		0.420
L1		7.49			0.295	
L2	8.89		9.14	0.350		0.360
M	0.79		1.04	0.031		0.041
N		0.25			0.010	
V	3°		6°	3°		6°

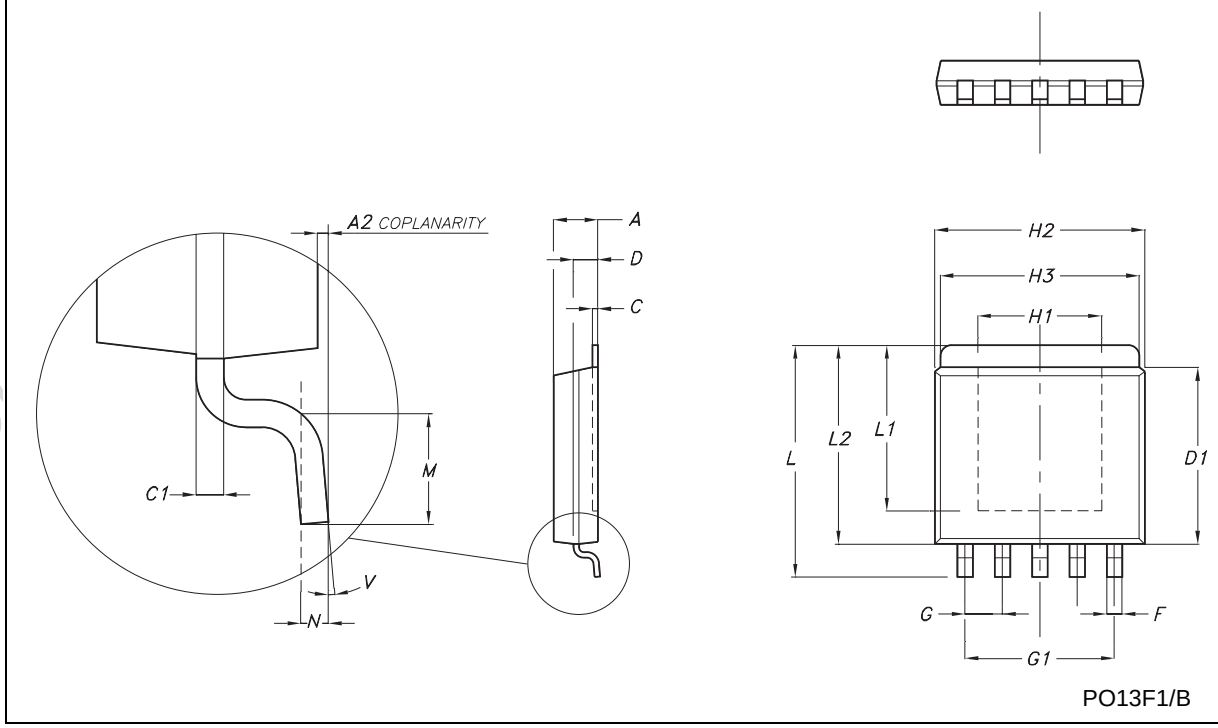

PO13F1/B

PPAK MECHANICAL DATA

DIM.	mm.			inch		
	MIN.	TYP	MAX.	MIN.	TYP.	MAX.
A	2.2		2.4	0.086		0.094
A1	0.9		1.1	0.035		0.043
A2	0.03		0.23	0.001		0.009
B	0.4		0.6	0.015		0.023
B2	5.2		5.4	0.204		0.212
C	0.45		0.6	0.017		0.023
C2	0.48		0.6	0.019		0.023
D	6		6.2	0.236		0.244
E	6.4		6.6	0.252		0.260
G	4.9		5.25	0.193		0.206
G1	2.38		2.7	0.093		0.106
H	9.35		10.1	0.368		0.397
L2		0.8			0.031	
L4	0.6		1	0.023		0.039

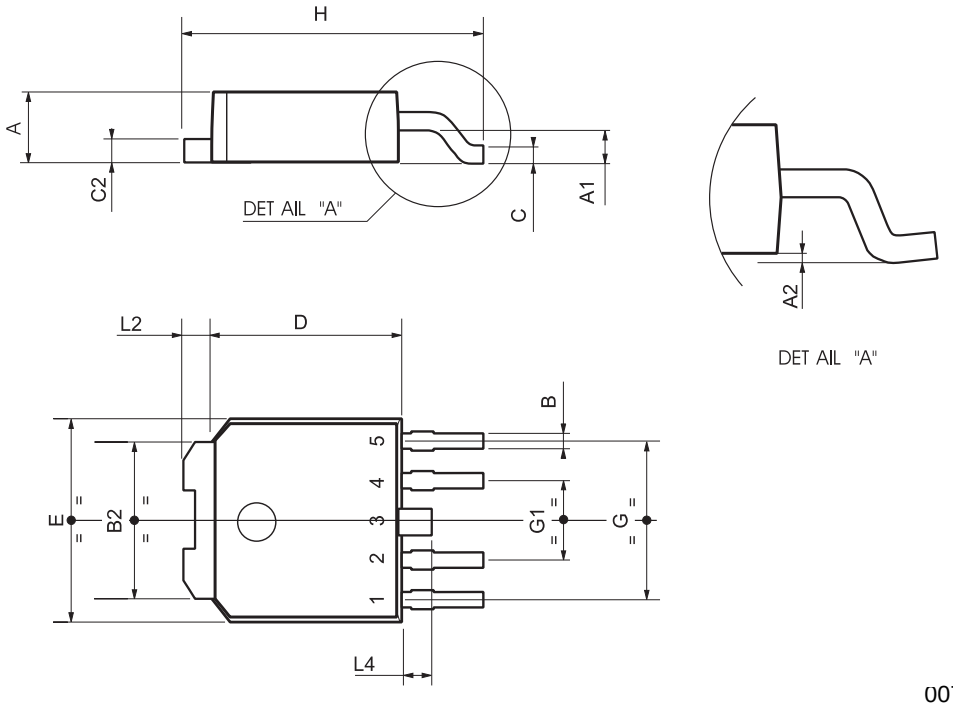

Tape & Reel SPAK-xL MECHANICAL DATA

DIM.	mm.			inch		
	MIN.	TYP	MAX.	MIN.	TYP.	MAX.
A			180			7.086
C	12.8	13.0	13.2	0.504	0.512	0.519
D	20.2			0.795		
N	60			2.362		
T			14.4			0.567
Ao	9.70	9.80	9.90	0.382	0.386	0.390
Bo	10.85	10.95	11.05	0.423	0.427	0.431
Ko	2.30	2.40	2.50	0.090	0.094	0.098
Po	3.9	4.0	4.1	0.153	0.157	0.161
P	11.9	12.0	12.1	0.468	0.472	0.476

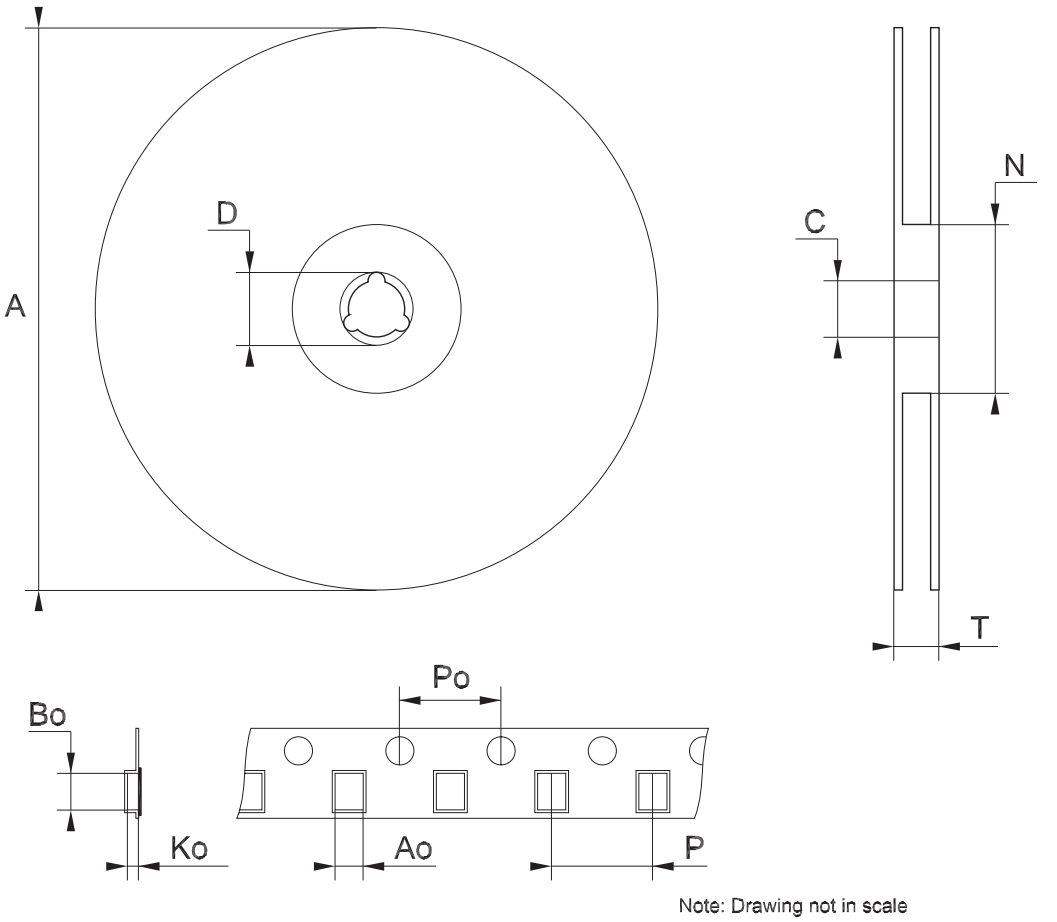

Note: Drawing not in scale

Tape & Reel DPAK-PPAK MECHANICAL DATA

DIM.	mm.			inch		
	MIN.	TYP	MAX.	MIN.	TYP.	MAX.
A			330			12.992
C	12.8	13.0	13.2	0.504	0.512	0.519
D	20.2			0.795		
N	60			2.362		
T			14.4			0.567
Ao	6.80	6.90	7.00	0.268	0.272	0.2.76
Bo	10.40	10.50	10.60	0.409	0.413	0.417
Ko	2.55	2.65	2.75	0.100	0.104	0.105
Po	3.9	4.0	4.1	0.153	0.157	0.161
P	7.9	8.0	8.1	0.311	0.315	0.319

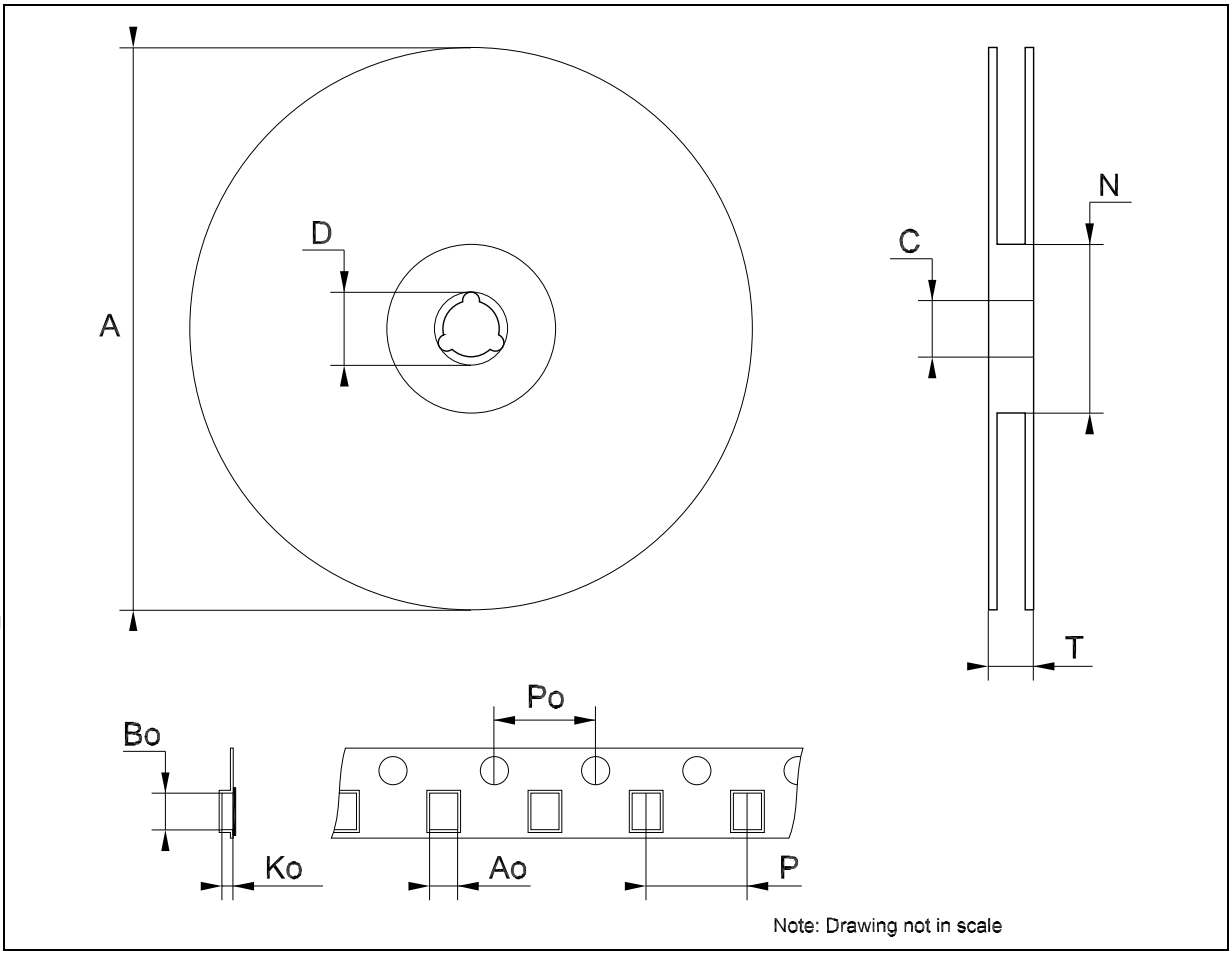

Note: Drawing not in scale

Information furnished is believed to be accurate and reliable. However, STMicroelectronics assumes no responsibility for the consequences of use of such information nor for any infringement of patents or other rights of third parties which may result from its use. No license is granted by implication or otherwise under any patent or patent rights of STMicroelectronics. Specifications mentioned in this publication are subject to change without notice. This publication supersedes and replaces all information previously supplied. STMicroelectronics products are not authorized for use as critical components in life support devices or systems without express written approval of STMicroelectronics.

The ST logo is a registered trademark of STMicroelectronics

All other names are the property of their respective owners

© 2003 STMicroelectronics - All Rights Reserved

STMicroelectronics GROUP OF COMPANIES

Australia - Belgium - Brazil - Canada - China - Czech Republic - Finland - France - Germany - Hong Kong - India - Israel - Italy - Japan - Malaysia - Malta - Morocco - Singapore - Spain - Sweden - Switzerland - United Kingdom - United States.

http://www.st.com