ST25R95

Datasheet

Near field communication transceiver

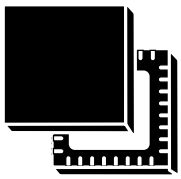

VFQFPN32
(5x5 mm)

Product status link
ST25R95

Features

- Belonging to ST25 family that includes all NFC/RF ID tag and reader products from STMicroelectronics
- Operating modes supported:
  - Reader/Writer
  - Card emulation (ISO/IEC 14443-3 Type A)
- Hardware features
  - Dedicated internal frame controller
  - Highly integrated analog front end (AFE) for RF communications
  - Transmission and reception modes
  - Optimized power management
  - Tag detection mode
  - Field detection mode
- RF communication at 13.56 MHz
  - NFC-A / ISO14443A reader mode
  - NFC-B / ISO14443B reader mode
  - NFC-F / FeliCa™ reader mode
  - NFC-V / ISO15693 reader mode
  - NFC-A / ISO14443A card emulation
  - MIFARE® Classic compatible
- Communication interfaces with a host controller
  - Serial peripheral interface (SPI) slave interface up to 2 Mbps
  - Up to 528-byte command/reception buffer (FIFO) depending on communication protocol
- 32-lead, 5x5 mm, very thin fine pitch quad flat (VFQFPN) ECOPACK2 package

Applications

Typical protocols supported:

- ISO/IEC 14443-3 Type A and B tags
- ISO/IEC 15693 tags
- ISO/IEC 18000-3M1 tags
- NFC Forum tags: Types 1, 2, 3, 4 and 5

Typical ST25R95 applications include:

- Consumer electronics
- Gaming
- Healthcare
- Industrial

Typical ST25R95 use cases include:

- NFC-enabled Wi-Fi® pairing
- NFC-enabled Bluetooth® pairing
- Data exchange
- Communication with NFC/RFID tags (reader mode)

1 Description

The ST25R95 is an integrated transceiver IC for contactless applications.

The ST25R95 manages frame coding and decoding in Reader and card emulation modes for standard applications such as near field communication (NFC), proximity and vicinity standards.

The ST25R95 supports ISO/IEC 14443 Type A communication in reader and card emulation modes, and ISO/IEC 14443 Type B, ISO/IEC15693, and FeliCa in reader mode.The ST25R95 embeds an analog front end to provide the 13.56 MHz air interface.

The ST25R95 also supports the detection, reading and writing of NFC Forum Type 1, 2, 3, 4, and 5 tags, and an SPI interface to communicate with the host controller.

Figure 1. ST25R95 application overview

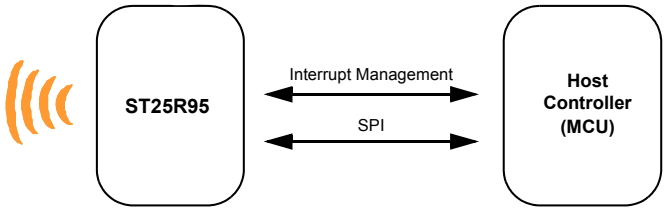

1.1 Block diagram

Figure 2. ST25R95 block diagram

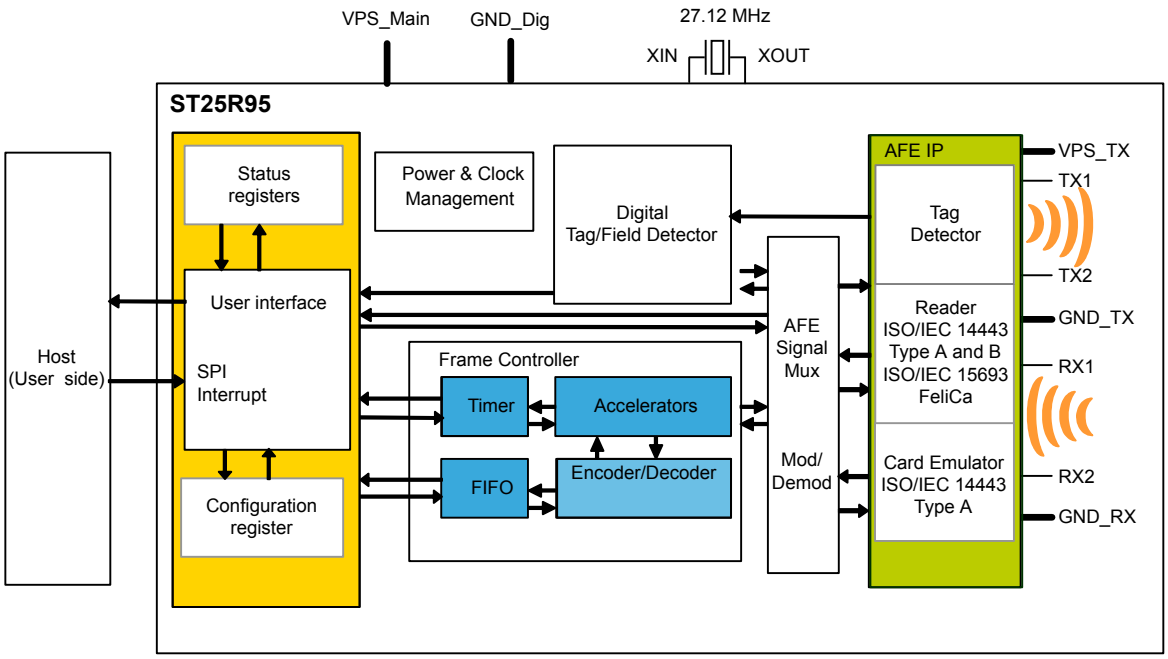

1.2 Clock management

The ST25R95 incorporates two clock sources, a high frequency oscillator (HFO) and a low frequency oscillator (LFO).

The HFO uses an external 27.12 MHz crystal to generate the internal system clock and the clock for the drivers to generate the RF field.

The LFO uses an internal 32 kHz RC oscillator to generate a slow system clock for low power operation modes.

In card emulation mode, a built-in clock recovery block is available which recovers the clock from the external HF field. This block can be selected instead of HFO by setting the ClkRec bit in the Protocol Select command.

1.3 Power supply

The ST25R95 has two power supply pins:

- VPS: supply of digital and analog blocks
- VPS_TX: direct supply of the driver stage

1.4 List of terms

Table 1. List of terms

Term	Meaning
AFE	Analog front end
DAC	Digital analog converter
FDT	Frame delay time
FWT	Frame waiting time
GND	Ground
HFO	High frequency oscillator
LFO	Low frequency oscillator
MCU	Microcontroller unit
MIFARE (1)	Communication protocol
NFC	Near field communication
RFID	Radio frequency identification
RFU	Reserved for future use
RWT	Response waiting time
SPI	Serial peripheral interface
t_L	Low frequency period
t_{REF}	Reference time
WFE	Wait for event

1. *MIFARE® and MIFARE® Classic are registered trademarks of NXP BV.*

2 Pin and signal descriptions

Figure 3. **ST25R95 pinout description**

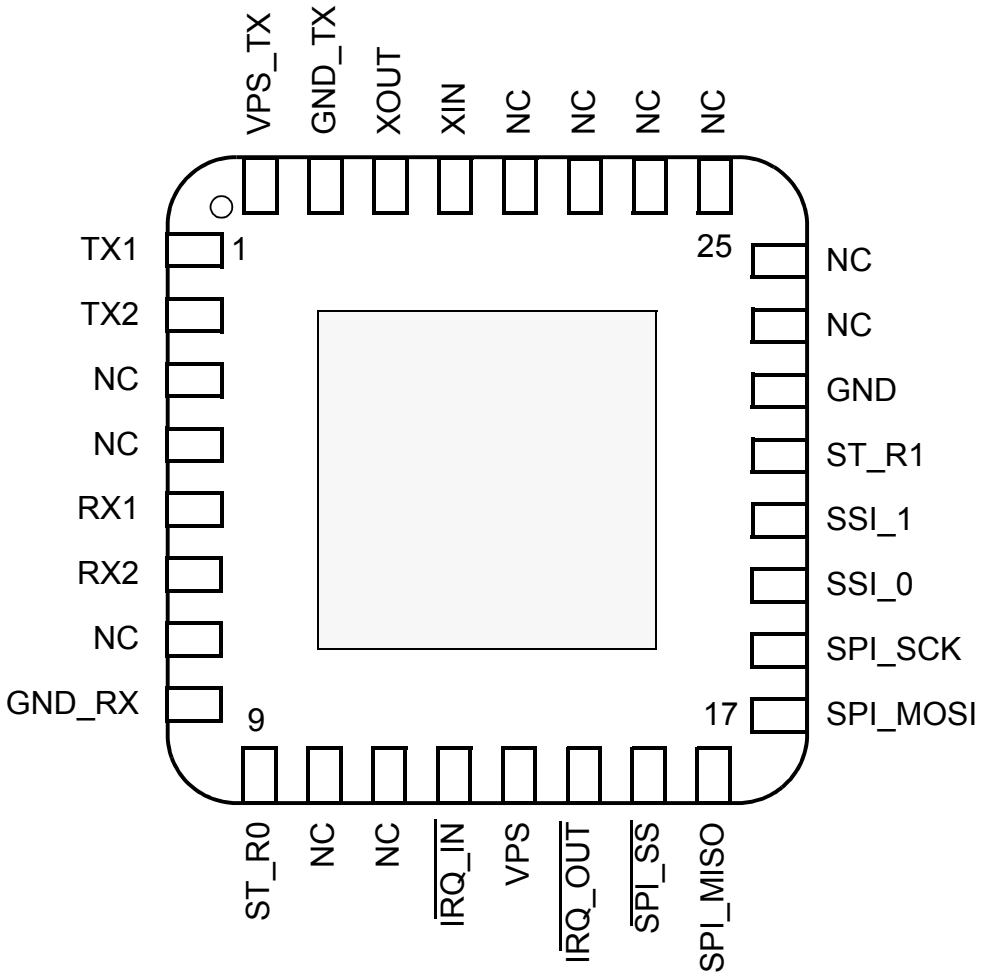

Note: Shaded area represents the dissipation pad (it must be connected to ground).

Table 2. ST25R95 pin descriptions

Pin	Pin name	Type [1]	Main function	Alternate function
1	TX1	O	Driver output 1	-
2	TX2	O	Driver output 2	-
3	NC	-	Not connected	-
4	NC	-	Not connected	-
5	RX1	I	Receiver input 1	-
6	RX2	I	Receiver input 2	-
7	NC	-	Not connected	-
8	GND_RX	P	Ground (analog)	-
9	ST_R0	O	ST reserved [2]	-
10	NC	-	Not connected	-
11	NC	-	Not connected	-
12	$\overline{\text{IRQ_IN}}$	I [3]	Interrupt input	-
13	VPS	P	Main power supply	-
14	$\overline{\text{IRQ_OUT}}$	O [4]	Interrupt output	-
15	$\overline{\text{SPI_SS}}$	I [5]	SPI slave select (active low)	-
16	SPI_MISO	O [5]	SPI data, slave output	-
17	SPI_MOSI	I [5]	SPI data, slave input [5]	-
18	SPI_SCK	I [6]	SPI serial clock	-
19	SSI_0	I [5]	Select serial communication interface	-
20	SSI_1	I [5]	Select serial communication interface	-
21	ST_R1	I [7]	ST reserved	-
22	GND	P	Ground (digital)	-
23	NC	-	Not connected	-
24	NC	-	Not connected	-
25	NC	-	Not connected	-
26	NC	-	Not connected	-
27	NC	-	Not connected	-
28	NC	-	Not connected	-
29	XIN	-	Crystal oscillator input	-
30	XOUT	-	Crystal oscillator output	-
31	GND_TX	P	Ground (RF drivers)	-
32	VPS_TX	P	Power supply (RF drivers)	-

1. *I: Input, O: Output, and P: Power*
2. *Must add a capacitor to ground (~1 nF).*
3. *Pad internally connected to a very weak pull-up to VPS.*
4. *Pad internally connected to a weak pull-up to VPS.*
5. *Must not be left floating.*
6. *Pad internally connected to a weak pull-down to GND.*
7. *Pad input in High impedance. Must be connected to VPS.*

3 Power management and operating modes

3.1 Operating modes

The ST25R95 has two operating modes: Wait for event (WFE) and Active. In Active mode, the ST25R95 communicates actively with a tag or an external host (an MCU, for example). WFE mode includes four low consumption states: Power-up, Hibernate, Sleep/Field detector and Tag detector.

The ST25R95 can switch from one mode to another.

Table 3. ST25R95 operating modes and states

Mode	State	Description
Wait for event (WFE)	Power-up	This mode is accessible directly after POR. Low level on $\overline{\text{IRQ_IN}}$ pin (longer than 10 µs) is the only wakeup source. LFO (low-frequency oscillator) is running in this state.
	Hibernate	Lowest power consumption state. The ST25R95 has to be woken-up in order to communicate. Low level on $\overline{\text{IRQ_IN}}$ pin (longer than 10 µs) is the only wakeup source.
	Sleep/Field detector	Low power consumption state. Wakeup source is configurable: • Timer • $\overline{\text{IRQ_IN}}$ pin • $\overline{\text{SPI_SS}}$ pin • Field Detector LFO (low-frequency oscillator) is running in this state.
	Tag detector	Low power consumption state with tag detection. Wakeup source is configurable: • Timer • $\overline{\text{IRQ_IN}}$ pin • $\overline{\text{SPI_SS}}$ pin • Tag detector LFO (low-frequency oscillator) is running in this state.
Active	Ready	In this mode, the RF is OFF and the ST25R95 waits for a command (ProtocolSelect, ...) from the external host via the selected serial interface (SPI).
	Reader	The ST25R95 can communicate with a tag using the selected protocol or with an external host using the SPI interface.
	Card emulation	The ST25R95 can communicate as a Card or Tag with an external reader. The Card or Tag application is located in the Host and communicates with the ST25R95 via the SPI interface.

Hibernate, Tag detector and Sleep/Field detector states can only be activated by a command from the external host. As soon as any of these three states are activated, the ST25R95 can no longer communicate with the external host. It can only be woken up.

The behaviour of the ST25R95 in 'Tag detector' state is defined by the Idle command.

Figure 4. **ST25R95 initialization and operating state change**

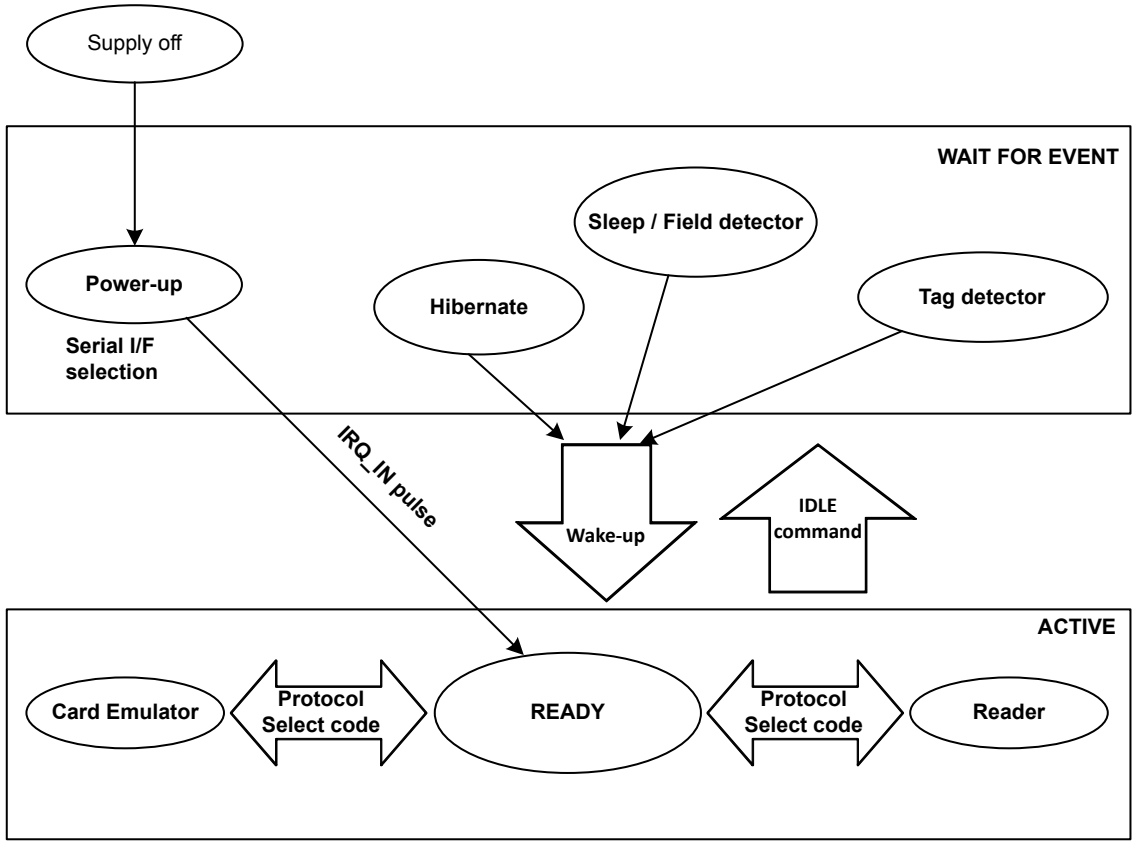

3.2 Startup sequence

After the power supply is established at power-on, the ST25R95 waits for a low pulse on the pin $\overline{\text{IRQ_IN}}$ (t_1) before automatically selecting the external interface (SPI) and entering Ready state after a delay (t_3).

Figure 5. **Power-up sequence**

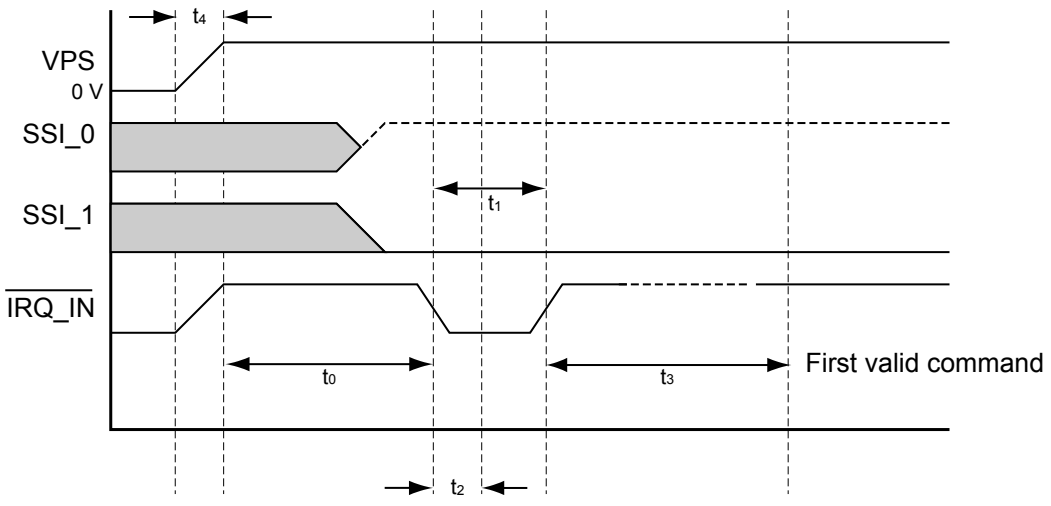

1. Pin $\overline{\text{IRQ_IN}}$ low level < 0.2 VPS_Main.

Figure 5 shows the power-up sequence for a ST25R95 device; where:

- t_0 is the initial wake-up delay — 100 µs (minimum)
- t_1 is the minimum interrupt width — 10 µs (minimum)
- t_2 is the delay for the serial interface selection — 250 ns (typical)
- t_3 is the HFO setup time ($t_{SU(HFO)}$) — 10 ms (maximum)
- t_4 is the VPS ramp-up time from 0V to VPS — 10 ms (max. by design validation)

Note: VPS must be 0V before executing the start-up sequence.

The serial interface is selected after the following falling edge of pin $\overline{IRQ_IN}$ when leaving from POR or Hibernate state.

Table 4 lists the signal configuration used to select the SPI communication interface.

Table 4. Select serial communication interface selection table

Pin	SPI interface
SSI_0	1
SSI_1	0

4 Communication protocols

4.1 Serial peripheral interface (SPI)

4.1.1 Polling mode

To send commands and receive replies, the application software has to perform three steps.

1. Send the command to the ST25R95.
2. Poll the ST25R95 until it is ready to transmit the response.
3. Read the response.

After a command, the application software needs to wait for the ST25R95 to be ready to send the response. Not following this procedure may cause unpredictable behaviour.

The maximum allowed SPI communication speed is f_{SCK}. The ST25R95 supports SPI communication configured for CPOL = CPHA = 1 and SPI communication configured for CPOL = CPHA = 0.

A control byte is used to specify a communication type and direction:

- 0x00: Send command to the ST25R95
- 0x03: Poll the ST25R95
- 0x02: Read data from the ST25R95
- 0x01: Reset the ST25R95

The $\overline{\text{SPI_SS}}$ line is used to select a device on the common SPI bus. The $\overline{\text{SPI_SS}}$ pin is active low.

When the $\overline{\text{SPI_SS}}$ line is inactive, all data sent by the Master device is ignored and the MISO line remains in High Impedance state.

In Slave mode, the phase and polarization are defined with CPOL = 1 and CPHA = 1 or CPOL = 0 and CPHA = 0.

Figure 6. Sending command to ST25R95

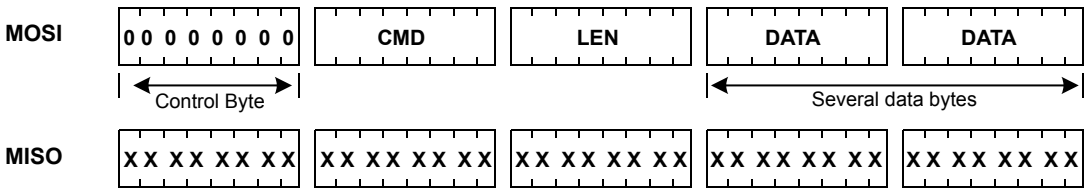

Figure 7. Polling the ST25R95 until it is ready

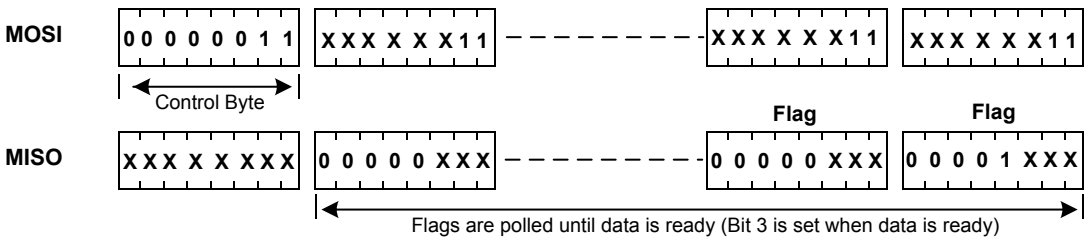

Table 5. Interpretation of flags

Bit	Meaning (application point of view)
[7:4]	Not significant
3	Data can be read from the ST25R95 when set.
2	Data can be sent to the ST25R95 when set.
[1:0]	Not significant

Figure 8. Reading data from ST25R95

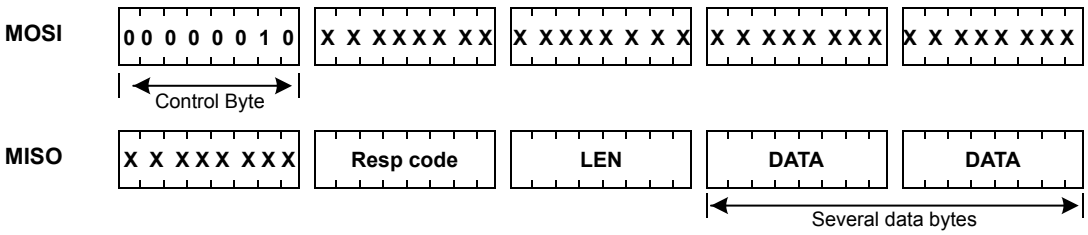

Data must be sampled at the rising edge of the SCK signal.

'Sending', 'Polling' and 'Reading' commands must be separated by a high level of the SPI_SS line. For example, when the application needs to wait for data from the ST25R95, it asserts the SPI_SS line low and issues a 'Polling' command. Keeping the SPI_SS line low, the Host can read the Flags Waiting bit which indicates that the ST25R95 can be read. Then, the application has to assert the SPI_SS line high to finish the polling command. The Host asserts the SPI_SS line low and issues a 'Reading' command to read data. When all data is read, the application asserts the SPI_SS line high.

The application is not obliged to keep reading Flags using the Polling command until the ST25R95 is ready in one command. It can issue as many 'Polling' commands as necessary. For example, the application asserts SPI_SS low, issues 'Polling' commands and reads Flags. If the ST25R95 is not ready, the application can assert SPI_SS high and continue its algorithm (measuring temperature, communication with something else). Then, the application can assert SPI_SS low again and again issue 'Polling' commands, and so on, as many times as necessary, until the ST25R95 is ready. Alternatively the application can also poll the IRQ_OUT pin (see Section 4.1.2 Interrupt mode).

Note: At the beginning of communication, the application does not need to check flags to start transmission. The ST25R95 is assumed to be ready to receive a command from the application.

Figure 9. Reset the ST25R95

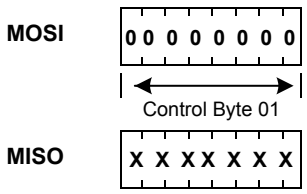

To reset the ST25R95 using the SPI, the application sends the SPI Reset command (control byte 01, see Figure 9. Reset the ST25R95) which starts the internal controller reset process and puts the ST25R95 into Power-up state. The ST25R95 will wake up when pin IRQ_IN goes low. The ST25R95 reset process is delayed until when the SPI_SS pin returns to high level.

Caution: SPI communication is MSB first.

4.1.2 Interrupt mode

When the ST25R95 is ready to send back a reply, it sends an Interrupt Request by setting a low level on pin IRQ_OUT, which remains low until the host reads the data.

The application can use the Interrupt mode to skip the polling stage.

4.2 Error codes

Table 6. Possible error codes and their meaning

Code	Name	Meaning
0X63	EEmdSOFerror23	SOF error in high part (duration 2 to 3 etu) in ISO/IEC 14443B
0x65	EEmdSOFerror10	SOF error in low part (duration 10 to 11 etu) in ISO/IEC 14443B
0x66	EEmdEgt	Error Extennded Guard Time error in ISO/IEC 14443B
0x67	ETr1 Too Big	Too long TR1 send by the card, reception stopped in ISO/IEC 14443BT
0x68	ETr1Too small	Too small TR1 send by the card in ISO/IEC 14443B
0x71	EinternalError	Wong frame format decodes
0x80	EFrameRecvOK	Frame correctly received (additionally see CRC/Parity information)
0x82	EInvalidCmdLen	Invalid command length
0x83	EInvalidProto	Invalid protocol
0x85	EUserStop	Stopped by user (used only in Card mode)
0x86	ECommError	Hardware communication error
0x87	EFrameWaitTOut	Frame wait time out (no valid reception)
0x88	EInvalidSof	Invalid SOF
0x89	EBufOverflow	Too many bytes received and data still arriving
0x8A	EFramingError	if start bit = 1 or stop bit = 0
0x8B	EEgtError	EGT time out
0x8C	EInvalidLen	Valid for FeliCa™, if Length <3
0x8D	ECrcError	CRC error, Valid only for FeliCa™
0x8E	ERecvLost	When reception is lost without EOF received (or subcarrier was lost)
0x8F	ENoField	When Listen command detects the absence of external field
0x90	EUnintByte	Residual bits in last byte. Useful for ACK/NAK reception of ISO/IEC 14443 Type A.

Note: In response to some commands the ST25R95 may provide data in addition to the error code. It is therefore necessary to always read the length byte and any appended data even if the response code indicates an error condition.

4.3 Support of long frames

In Reader mode it is possible to receive up to 528 bytes of frame data from VICC and Type-B cards and up to 256 bytes of frame data from Type-A cards. In this case, the device sends a reply to the external MCU in the following format:

`<ResultCode> + <Len> + <N bytes of data>`

Table 7. Format of ResultCode

Bit	Meaning	
7	Always 1	
6	Bit 9 of Length	See examples and explanation below
5	Bit 8 of Length	
4	If set, there are residual bits in the last byte. Applicable only for Type-A protocol.	
3:0	Always 0	

Figure 10. Long frame format

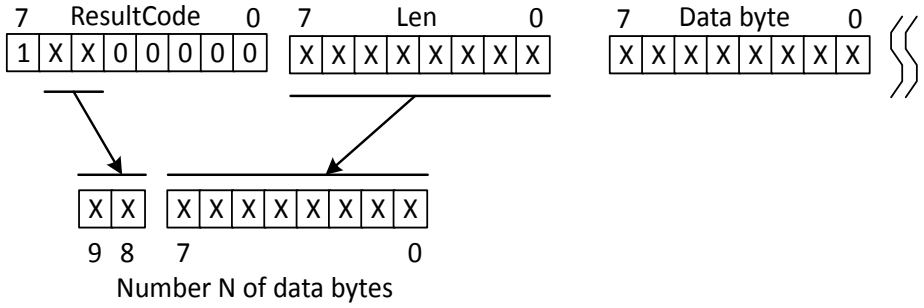

The number of databytes is 10-bit long.

Table 8. Examples of ResultCode: Len pairs

Result code	Len	Effective length of data
0x80	0x00 - 0xFF	0 - 255 bytes
0xA0	0x00 - 0xFF	256 - 511 bytes
0xC0	0x00 - 0x10	512 - 528 bytes
0x90	0x00 - 0xFF	0 - 255 bytes (1)
0xB0	0x00 - 0xFF	256 - 511 bytes(1)
0xD0	0x00 - 0x10	512 - 528 bytes(1)

1. *In ISO 14443A only in case of none integer number of bytes*

5 Commands

5.1 Command format

- The frame from the Host to the ST25R95 has the following format:
  `<CMD><Len><Data>`
- The frame from the ST25R95 to Host has the following format:
  `<RespCode><Len><Data>`

Fields <Cmd>, <RespCode> and <Len> are always 1 byte long. <Data> can be from 0 to 528 bytes.

Note: The Echo command is an exception as it has only one byte (0x55).

The following symbols correspond to:
>>> Frame sent by the Host to ST25R95
<<< Frame sent by the ST25R95 to the Host

5.2 List of commands

Table 9 summarizes the available commands.

Table 9. List of ST25R95 commands

Code	Command	Description
0x01	IDN	Requests short information about the ST25R95 and its revision.
0x02	ProtocolSelect	Selects the RF communication protocol and specifies certain protocol-related parameters.
0x03	Pollfield	Returns the current value of the Field Detector (FieldDet) flag (used in card emulation mode).
0x04	SendRecv	Sends data using the previously selected protocol and receives the tag response.
0x05	Listen	Listens for data using previously selected protocol (used in card emulation mode).
0x06	Send	Sends data using previously selected protocol (used in card emulation mode).
0x07	Idle	Switches the ST25R95 into a low consumption Wait for Event (WFE) mode (Power-up, Hibernate, Sleep/Field or Tag detection), specifies the authorized wake-up sources and waits for an event to exit to Ready state.
0x08	RdReg	Reads Wake-up event register or the Analog Register Configuration (ACC_A or ARC_B) register.
0x09	WrReg	Writes Analog Register Configuration (ACC_A or ARC_B)) register or writes index of ACC_A or ARC_B register address. Writes the Timer Window (TimerW) value dedicated to ISO/IEC 14443 Type A tags. Writes the AutoDetect Filter enable register dedicated to FeliCa™ tags.
0x0B	SubFreqRes	Returns the most recent subcarrier frequency detected for FeliCa™ communication.
0x0D	AC filter	Enables or disables the anti-collision filter for ISO/IEC 14443 Type A protocol.
0x55	Echo	performs a serial interface Echo command (reply data 0x55 or stops the Listening state when a listen command has been sent without error).
Other codes		ST reserved

5.3 IDN command (0x01) description

The IDN command (0x01) gives brief information about the ST25R95 and its revision.

Table 10. IDN command description

Direction	Data	Comments	Example
Host to ST25R95	0x01	Command code	>>>0x0100
	0x00	Length of data	
ST25R95 to Host	0x00	Result code	<<<0x000F4E4643204653324A41535434002ACE In this example, <<<0x4E464320465332 4A4153543400: 'NFC FS2JAST4', #4 (Last Character of NFC FS2JAST4 means ROM code revision 4.) 0x2ACE : CRC of ROM (real CRC may differ from this example)
	<Len>	Length of data	
	<Device ID>	Data in ASCII format (13 bytes)	
	<ROM CRC>	CRC calculated for ROM content (2 bytes)	

It takes approximately 6 ms to calculate the CRC for the entire ROM. The application must foresee an adequate time when waiting for a response to this command.

5.4 Protocol select command (0x02) description

This command selects the RF communication protocol and prepares the ST25R95 for communication with a reader or contactless tag.

Table 11. Protocol Select command description

Direction	Data	Comments	Example
Host to ST25R95	0x02	Command code	See Table 12. List of <Parameters> values for the ProtocolSelect command for different protocols (Reader).
	<Len>	Length of data	
	<Protocol>	Protocol codes (Reader): • 00: Field OFF • 01: ISO/IEC 15693 • 02: ISO/IEC 14443-A • 03: ISO/IEC 14443-B • 04: FeliCa	
		Protocol codes (card emulation): • 12: ISO/IEC 14443-A	See Table 13. List of <Parameters> values for different protocols (card emulation)
	<Parameters>	Each protocol has a different set of parameters.	See Table 12 and Table 13.
ST25R95 to Host	0x00	Result code	<<<0x0000 Protocol is successfully selected
	0x00	Length of data	
ST25R95 to Host	0x82	Error code	<<<0x8200 Invalid command length
	0x00	Length of data	
ST25R95 to Host	0x83	Error code	<<<0x8300 Invalid protocol
	0x00	Length of data	

Note: There is no 'Field ON' command. When the application selects an RF communication protocol, the field automatically switches ON if the Reader state is selected.

When the application selects a protocol, the ST25R95 performs all necessary settings: it will choose the appropriate reception and transmission chains, switch ON or OFF the RF field and connect the antenna accordingly.

Different protocols have different sets of parameters. Values for the `<Parameters>` field are listed in Table 12.

Table 12. List of <Parameters> values for the ProtocolSelect command for different protocols (Reader)

Protocol	Code	Parameters			Examples of commands
		Byte	Bit	Function	
Field OFF	0x00	0	7:0	RFU	>>>0x020100
ISO/IEC 15693 NFC Forum Tag Type 5	0x01	0	7:6	RFU	H 100 S: >>>0x02 02 01 01 H 100 D: >>>0x02 02 01 03 H 10 S: >>>0x02 02 01 05 H 10 D: >>>0x02 02 01 07 L 100 S: >>>0x02 02 01 21 L 100 D: >>>0x02 02 01 23 L 10 S: >>>0x02 02 01 25 L 10 D: >>>0x02 02 01 27 In these examples, the CRC is automatically appended.
			5:4	00: 26 Kbps (H) 01: 52 Kbps 10: 6 Kbps (L) 11: RFU	
			3	0: Respect 312-µs delay 1: Wait for SOF	
			2	0: 100% modulation (100) 1: 10% modulation (10)	
			1	0: Single subcarrier (S) 1: Dual subcarrier (D)	
			0	0: no CRC appended 1: automatically append CRC	
ISO/IEC 14443 Type A NFC Forum Tag Type 1 (Topaz) NFC Forum Tag Type 2 NFC Forum Tag Type 4A	0x02	0	7:6	Transmission data rate 00: 106 Kbps 01: 212 Kbps 10: 424 Kbps 11: RFU	>>>0x02020200: ISO/IEC 14443 Type A tag, 106 Kbps transmission and reception rates, FDT 86/90 µs
			5:4	Reception data rate 00: 106 Kbps 01: 212 Kbps 10: 424 Kbps 11: RFU	
			3:0	RFU	
		1	7:0	PP (0x00 - 0x0E, other values RFU) When there is PP, MM must also be provided.	These 3 bytes are optional. The default PP:MM:DD value is 0 (corresponds to FDT 86/90µs). For other values, FDT = (2^PP)*(MM +1)*(DD+128) *32/13.56 µs
		2	7:0	MM	
		3	7:0	DD (0x00 - 0x7F, other values RFU)	

Protocol	Code	Parameters			Examples of commands
		Byte	Bit	Function	
ISO/IEC 14443 Type B NFC Forum Tag Type 4B	0x03	0	7:6	Transmition data rate 00: 106 Kbps 01: 212 Kbps 10: 424 Kbps 11: 428 Kbps	>>>0x02020301: ISO/IEC 14443 Type B tag with CRC appended
			5:4	Reception data rate 00: 106 Kbps 01: 212 Kbps 10: 424 Kbps 11: 848 Kbps	
			3:1	RFU	
			0	0: no CRC appended 1: automatically append CRC	
		1	7:0	PP (0x00 - 0x0E, other values RFU) When there is PP, MM must also be provided.	These 9 bytes are optional. Default value of PP:MM:DD is 0 and corresponds to FWT ~302µs. FWT = (2^PP)*(MM+1)*(DD+128)* 32/13.56 µs
		2	7:0	MM	
		3	7:0	DD (0x00 - 0x7F, other values RFU)	
		5:4	7:0	TTTT (Optional)	TR0 = TTTT/FC (LSB first), default 1023 = 0x3FF
		6	7:0	YY (Optional)	PCD Min TR1 (Min_TR1 = 8 * XX / f_S), default = 0
		7	7:0	ZZ (Optional)	PCD Max TR1 (Max_TR1 = 8 * ZZ / f_S), default = 26 = 0x1A

Protocol	Code	Parameters			Examples of commands
		Byte	Bit	Function	
FeliCa NFC Forum Tag Type 3	0x04	0	7:6	Transmission data rate 00: 106 Kbps 01: 212 Kbps 10: 424 Kbps 11: RFU	>>>0x02020451: FeliCa tag, 212 Kbps transmission and reception rates with CRC appended.
			5:4	Reception data rate 00: RFU 01: 212 Kbps 10: 424 Kbps 11: RFU	
			3:1	RFU	
			0	0: no CRC appended 1: automatically append CRC	
		1	7:0	RFU must be set to 0x10	
		2	7:0	PP (0x00 - 0x0E, other values RFU) When there is PP, MM must also be provided.	These 2 bytes are optional. The default PP:MM value is 0 (corresponds to RWT ~302µs).
		3	7:0	MM	RWT = (2^PP)*(MM+1)*4096/13.56 µs

Note: The protocol select command for Felica does not contain a DD parameter.

Table 13. List of <Parameters> values for different protocols (card emulation)

Protocol (Card)	Code	Parameters			Examples of commands Comments
		Byte	Bit	Function	
ISO/IEC 14443 Type A (1)	0x12	0	7:6	Transmission data rate 00: 106 Kbps 01: RFU 10: RFU 11: RFU	>>>0x02021208 <<<0x0000 Card emulation for ISO/IEC 14443 Type A, Data rate is 106 Kbps for both up- and down-links.
			5:4	Reception data rate 00: 106 Kbps 01: RFU 10: RFU 11: RFU	
			3	0: Return an error, if no RF field 1: Wait for RF field	
			2	RFU	
			1	Clock source 0: HFO 1: Clock recovered from the field	
			0	RFU	

1. *Topaz is not supported in card emulation mode.*

5.5 Pollfield command (0x03) description

This command can be used to detect the presence/absence of an HF field by monitoring the field detector (FieldDet) flag. It can be used as well to wait for HF field appearance or disappearance until a defined timeout expires. The answer to the PollField command is the value of the FieldDet flag.

Table 14. Pollfield command description

Direction	Data	Comments	Example
Host to ST25R95	03	Command code	>>>0x0300 Check if RF Field is ON or OFF >>> 0x0303010FFF - Wait for RF Field appearance for (16*256)/13.56 µs Flags, Presc and Timer parameters are optional. They must be specidfied if the application has to wait for RF field appearance or disappearance. The time to wait is (Presc+1)*(Timer+1)/13.56 µs.
	<Len>	Length of data	
	<Flags>	RF field presence (Optional): 01: Wait for RF field appearance 00: Wait for RF field disappearance	
	<Presc>	Timer prescaler (Optional)	
	<Timer>	Timer time-out (Optional)	
ST25R95 to Host	00	Result code	<<<0x0000 No RF field detected
	00	Length of data	
ST25R95 to Host	00	Result code	<<<0x0000 or 0x000100 (No RF field detected) or 0x000101 (RF field detected)
	01	Length of data	
	<FieldDet>	[7:1]: RFU 0: No field detect 1: Field detect	
ST25R95 to Host	82	Error code	<<<0x8200 Invalid command length
	00	Length of data	

The result of this command depends on the protocol selected. If a reader mode protocol is selected, the flag FieldDet is set to ‘1’ because the RF field is turned ON by the reader.

5.6 Send receive (SendRecv) command (0x04) description

This command sends data to a contactless tag and receives its reply.

Before sending this command, the Host must first send the ProtocolSelect command to select an RF communication protocol.

If the tag response was received and decoded correctly, the <Data> field can contain additional information which is protocol-specific. This is explained in Table 16. List of <DATA> send values for the SendRecv command for different protocols.

Note: Before issuing a new SendRecv command, the previous one must be completed (for instance, either when a response from the tag is received or when a timeout error or any other error response is received)

Table 15. SendRecv command description

Direction	Data	Comments	Example
Host to ST25R95	0x04	Command code	See Table 16 and Table 17 for detailed examples.
	<Len>	Length of data	
	<Data>	Data to be sent	
ST25R95 to Host	0x80	Result code	<<<0x800F5077FE01B3000000000071718EBA00 The tag response is decoded. This is an example of an ISO/IEC 14443 ATQB response (Answer to Request Type B)
	<Len>	Length of data	
	<Data>	Data received. Interpretation depends on protocol	
ST25R95 to Host	0x90	Result code	<<<0x90040x240000 (exception for 4-bit frames where 'x' represents ACK or NAK value) • 90: Result code for "non-integer number of bytes are received" • 04: total length of data • 0A or 00: Data 24: "2" means no CRC, "4" means 4 significant bits in Data byte. • 00 00: No collision in response Example ACK <<< 0x90040A240000 Example NAK <<< 0x900400240000
	<Len>	Length of data	
	ACK or NAK	ISO 14443-A ACK or NAK detection	
	xx yy zz	3-byte response flag analysis	xx: Error type and number of significant bits in first data byte yy: First byte collision zz: First bit collision(1)
ST25R95 to Host	X0 + <Len> + Data (see Section 4.3 Support of long frames)		
ST25R95 to Host	0x86	Error code	<<<0x8600 Communication error
	0x00	Length of data	
ST25R95 to Host	0x87	Error code	<<<0x8700 Frame wait time out or no tag
	0x00	Length of data	
ST25R95 to Host	0x88	Error code	<<<0x8800 Invalid SOF
	0x00	Length of data	
ST25R95 to Host	0x89	Error code	<<<0x8900 Receive buffer overflow (too many bytes received)
	0x00	Length of data	

Direction	Data	Comments	Example
ST25R95 to Host	0x8A	Error code	<<<0x8A00 Framing error (start bit = 0, stop bit = 1)
	0x00	Length of data	
ST25R95 to Host	0x8B	Error code	<<<0x8B00 EGT time out (for ISO/IEC 14443-B)
	0x00	Length of data	
ST25R95 to Host	0x8C	Error code	<<<0x8C00 Invalid length. Used in NFC Forum Tag Type 3, when field Length < 3
	0x00	Length of data	
ST25R95 to Host	0x8D	Error code	<<<0x8D00 CRC error (Used in NFC Forum Tag Type 3 protocol)
	0x00	Length of data	
ST25R95 to Host	0x8E	Error code	<<<0x8E00 Reception lost without EOF received
	0x00	Length of data	

1. *See Table 16 for details.*

Table 16 gives examples of communication between the ST25R95 and a contactless tag. The ST25R95 receives a SendRecv command (>>> 0x04...) from the host and returns its response to the host (<<< 0x80...). Table 16 provides more details on the ST25R95 response format.

Table 16. List of <DATA> send values for the SendRecv command for different protocols

Protocol	Explanation	Command example			Comments
ISO/IEC 15693 NFC Forum Tag Type 5	Send example	04	03	022000	Example of an Inventory command using different protocol configuration: Uplink: 100% ASK, 1/4 coding Downlink: High data rate, Single sub-carrier >>> 0x0403260100 (Inventory - 1 slot) <<< 0x800D0000CDE0406CD62902E0057900 If length of data is '0', only the EOF will be sent. This can be used for an anti-collision procedure.
	Command code				
	Length of entire data field				
	Data				

<table>
<tr><th>Protocol</th><th>Explanation</th><th colspan="4">Command example</th><th>Comments</th></tr>
<tr><td rowspan="5">ISO/IEC 14443 Type A
NFC Forum Tag Type 4A
NFC Forum Tag Type 1 (Topaz)
NFC Forum Tag Type 2</td><td>Send example</td><td>04</td><td>07</td><td>9370800F 8C8E</td><td>28</td><td rowspan="5">Example of an NFC Forum Type 2 request sequence:
>>>0x04022607 (REQA)
<<<0x800544002800 (ATQA)
>>>0x0403932008 (Anti-collision CL1)
<<<0x80088804A8D5F1280000 (UID CL1)...
Example of an NFC Forum Type 1 (Topaz) request sequence:
>>>0x04022607 (REQA)
<<<0x8005000C280000 (ATQ0 ATQ1)
>>>0x040878000000000000A8 (RID)
<<<0x800B11486E567A003E45080000 (Header0 Header1 UID0 UID 1 UID2 UID3 CRC0 CRC1Signifcant bits indexColbyte IndexColbit)
Application SW must specify how many bits to send in the last byte. If flag SplitFrame is set, ST25R95 will expect 8 – <significant bit count> bits in the 1st byte during reception.
In this case, the first byte received is padded with zeros in lsb to complete the byte, while the last byte received is padded with zeros in msb.
Example of an anti-collision command / response in ISO/IEC 14443_A communication using a Split frame:
>>> 0x0403932008 (Anticol)
<<< 0x800888047B75B7 B8 0204 (Collision Detected B8)
>>> 0x0406934588040B 45 (Anticol Split frame request 45)
<<< 0x80064074B3 23 0000 (Spilt frame Answer 23)
This command is useful for anti-collision.</td></tr>
<tr><td colspan="4">Command code</td></tr>
<tr><td colspan="4">Length of entire data field</td></tr>
<tr><td colspan="4">Data</td></tr>
<tr><td>Transmission flags:
7: Topaz send format. Use EOF instead of parity bit and use SOF at beginning of each byte. Pause between bytes and assume 1st byte is 7 bits.
6: SplitFrame
5: Append CRC
4: Parity Framing mode(1)
[3:0]: Number of significant bits in last byte</td></tr>
<tr><td rowspan="4">ISO/IEC 14443 Type B
NFC Forum Tag Type 4B</td><td>Send example</td><td>04</td><td>03</td><td>050000</td><td></td><td rowspan="4">Example of an NFC Forum Type 4B request sequence:
>>>0x0403050000 (REQB)
<<<0x800F5077FE01B3000000000071718EBA00 (ATQB)</td></tr>
<tr><td colspan="4">Command code</td></tr>
<tr><td colspan="4">Length of entire data field</td></tr>
<tr><td colspan="4">Data</td></tr>
</table>

Protocol	Explanation	Command example			Comments
FeliCa™ NFC Forum Tag Type 3	Send example	04	05	00FFFF0000	Example of an FeliCa™ / NFC Forum Type 3 request sequence: >>>0x040500FFFF0000 (SENSF_REQ) <<<0x801201010102148E0DB413100B4B428485D0FF00 (SENSF_RES)
	Command code				
	Length of entire data field				
	Data				

1. *If parity framing mode is used (Bit 4 of transmission flag byte is set to '1'), then the parity bit must be coded inside the data for each byte to be sent using the send/receive command in transmit mode, and is not decoded by the ST25R95 in receive mode. In Receive mode, each data byte is accompanied by an additional byte which encodes the parity: <data byte> <parity byte> <data byte > . Examples of data received by send / receive in Parity Framing mode:*
   - *80 05 32 80 34 00 00*

   meaning: if the ST25R95 received 2 data bytes:
   - *0x32 with parity = '1' (0x80) and 0x34 with parity = '0' (0x0) in parity framing mode.*
     The parity framing mode is compatible with MIFARE® classic requirements. However, access to authenticated state must be supported by the external secure host which embeds the MIFARE® classic library.

Figure 11. Data transfer (in both command and response) when Parity Framing mode is enabled

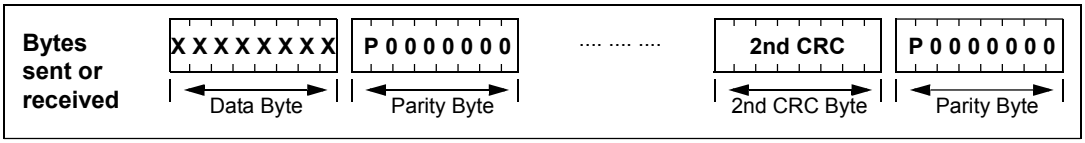

Table 17. List of <Data> response values for the SendRecv command for different protocols

Protocol	Explanation	Response example					Comments
ISO/IEC 15693 NFC Forum Tag Type 5	Response example	80	08	0000000000	77CF	00	This is a response to Read Single Block command for ISO/IEC 15693 TAG. Actual TAG response is <<<0x000000000077CF, other fields are added by the ST25R95.
	Result code						
	Length of entire data field						
	Data received from tag						
	Original (received) value of CRC						
	[7:2]: RFU 1: CRC error if set 0: Collision is detected if set						

Protocol	Explanation	Response example						Comments
ISO/IEC 14443 Type A NFC Forum Tag Type 4A NFC Forum Tag Type 1 (Topaz) NFC Forum Tag Type 2	Response example	80 or 90 [1]	09	80B30B8DB500	00	00	00	ISO/IEC 14443-A is bit oriented protocol, so we can receive non-integer amount of bytes. Number of significant bits in the 1st byte is the same as indicated in the command sent. To calculate a position of a collision, application has to take index of byte first. Index of bit indicates a position inside this byte. Note that both indexes start from 0 and bit index can be 8, meaning that collision affected parity. Note that collision information is only valid when bit 'Collision is detected' is set [2].
	Result code							
	Length of entire data field							
	Data received from TAG (including CRC if present)							
	7: Collision is detected 6: RFU 5: CRC error 4: Parity error [3:0]: Shows how many significant bits are there in the first byte							
	7:0: Index of the first byte where collision is detected							
	[7:4]: RFU [3:0]: Index of the first bit where collision is detected							
ISO/IEC 14443 Type B NFC Forum Tag Type 4B	Response example	80	0F	5092036A8D0000000000 7171	3411	00		-
	Result code							
	Length of entire data field							
	Data received from tag							
	Original (received) value of CRC							
	[7:2]: RFU 1: CRC error if set 0: RFU							
FeliCa™ NFC Forum Tag Type 3	Response example	80	12	01010105017B0...93FF		00		<<<0x801201010105017B06941004014B024F4993FF00
	Result code							
	Length of entire data field							
	Data received from tag (not including CRC)							
	[7:2]: RFU 1: CRC error if set 0: RFU							

1. *Result code 90: Response is decoded but number of byte is not an integer.*
2. *The collision information is only present for ISO14443A protocol with a bit rate of 106 kbps for transmission and reception. When other protocols or bit rates are selected, the two additional bytes are not transmitted.*

If Parity Framing mode is used, the parity bit stays unchanged. On transmission, it is not encoded and on reception it is not decoded. The length of Data must be even. Each data byte is accompanied by an additional byte which encodes the parity:

`<DataByte>, <Parity>, <DataByte>, <Parity> …`

Table 18. Structure of Parity byte

Bit	Description
7	Parity bit
[6:0]	Reserved for future use

On reception, bits [6:0] of the parity byte are zeroes; on transmission, bits [6:0] are ignored.

5.7 Listen command (0x05) description

In card emulation mode, this command waits for a command from an external reader.

Before sending this command, the application must select a protocol.

Table 19. Listen command description

Direction	Data	Comments	Example
Host to ST25R95	05	Command code	0x0500: Enters a Listening mode where the ST25R95 waits for a command from an external reader.
	00	Length of data	
ST25R95 to Host	00	Result code	0x0000: No error. Confirmation that ST25R95 now is in Listening mode.
	00	Length of data	
ST25R95 to Host	82	Error code	0x8200: Invalid command length
	00	Length of data	
ST25R95 to Host	83	Error code	0x8300: Invalid protocol or protocol is not supported. For example, application selects protocol ISO/IEC 15693 using command select protocol and then executes the Listen command. ISO/IEC 15693 is not supported in card emulation mode.
	00	Length of data	
ST25R95 to Host	8F	Error code	0x8F00: No field. Command cannot be executed because there is no external field.
	00	Length of data	

After reception of the Listen command and the return of a 'No error' confirmation, the ST25R95 enters Listening mode. The host controller has to use SPI Poll mode or $\overline{\text{IRQ_OUT}}$ pin to detect when a receive frame is available in the ST25R95 buffer. The ST25R95 will exit Listening mode as soon it receives the Echo command (0x55) from the Host Controller (MCU) or a command from an external reader (not including commands supported by the AC filter command listed in Table 41. Commands to which the device is able to react).

In all cases, the ST25R95 will send data or an error code to the Host controller (MCU).

If no command from an external reader has been received, then the Echo command (0x55) must be used to exit the Listening mode prior to sending a new command to the ST25R95. In response to the Echo command, the ST25R95 sends 0x55 + 0x8500 (error code of the Listening state cancelled by the MCU).

Possible return codes are listed in Table 20. Response codes from the ST25R95 in Listening mode.

Table 20. Response codes from the ST25R95 in Listening mode

Direction	Data	Comments	Example
ST25R95 to Host	80	Result code	<<<0x80022627 The frame from the reader is decoded. This is an example of an ISO/IEC 14443 Type A frame (REQA) received in card emulation mode.
	<Len>	Length of data	
	<Data>	Data received. Interpretation depends on protocol	
ST25R95 to Host	85	Error code	<<<0x8500 Listening mode was cancelled by the application
	00	Length of data	
ST25R95 to Host	86	Error code	<<<0x8600 Communication error
	00	Length of data	
ST25R95 to Host	88	Error code	<<<0x8800 Invalid SOF
	00	Length of data	
ST25R95 to Host	89	Error code	<<<0x8900 Receive buffer overflow (too many bytes received)
	00	Length of data	
ST25R95 to Host	8A	Error code	<<<0x8A00 Framing error (start bit=0, stop bit=1)
	00	Length of data	
ST25R95 to Host	8B	Error code	<<<0x8B00 EGT time out (for ISO/IEC 14443B)
	00	Length of data	
ST25R95 to Host	8D	Error code	<<<0x8D00 CRC error (Used in NFC Forum Tag Type 3 protocol)
	00	Length of data	
ST25R95 - Host	8E	Error code	<<<0x8E00 Reception lost without EOF received
	00	Length of data	

If the request from the Reader was received and decoded correctly, the ST25R95 will send data back to the Host (card emulation application). This is explained in Table 21.

Table 21. Data format sent to the Host in Listening mode

Protocol	Explanation	Response example	Comments
ISO/IEC-14443 Type A	Request example Result code Length of entire data field Data received from reader Received value of BCC (if any) Received value of CRC (if any) 7: RFU 6: RFU 5: CRC error 4: Parity error 3:0: number of significant bits in last byte	80 0A 9370800F8C8E 8D 4E01 08	<<<0x80 0A 9370800F8C8E 8D 4E01 08

5.8 Send command (0x06) description

This command immediately sends data to the reader using the Load Modulation method without waiting for a reply.

Before sending this command, the application must select a communication protocol.

Table 22. Send command description

Direction	Data	Comments	Example
Host to ST25R95	06	Command code	>>>0x0x0603040008 : Response in ISO/IEC 14443 type A card emulation
	<Len>	Length of data	
	<Data>	Data and additional parameter to be sent	
ST25R95 to Host	00	Result code	<<<0x0000 Data was successfully sent
	00	Length of data	
ST25R95 to Host	82	Error code	<<<0x8200 Invalid length (for example, Length=0 where it is not possible)
	00	Length of data	
ST25R95 to Host	83	Error code	<<<0x8300 Invalid protocol previously selected by Select Protocol command
	00	Length of data	

Table 23. Format of data to be sent using Send command

Protocol	Explanation	Response example				Comments
ISO/IEC-14443 Type A	Send example	06	03	0400	08	>>>0x0603040008
	Command code					
	Length of entire data field					
	Data					
	Parameter: 7:6: RFU 5: Append CRC 4: RFU 3:0: Number of significant bits in first byte					

5.9 Idle command (0x07) description

This command switches the ST25R95 into low power consumption mode and defines the way to return to Ready state.

The Result code contains the Wake-up flag register value indicating to the application the wake-up event that caused the device to exit WFE mode.

Caution: **In low power consumption mode the device does not support SPI poll mechanism. Application has to rely on IRQ_OUT before reading the answer to the Idle command.**

Table 24. Idle command description

Direction	Data	Comments	Example
Host to ST25R95	07	Command code	Example of switch from Active mode to Hibernate state: >>>0x07 0E 08 04 00 04 00 18 00 00 00 00 00 00 00 00 Example of switch from Active to WFE mode (wake-up by low pulse on IRQ_IN pin): >>>0x07 0E 08 01 00 38 00 18 00 00 60 00 00 00 00 00 Example of switch from Active to WFE mode (wake-up by low pulse on SPI_SS pin): >>>0x07 0E 10 01 00 38 00 18 00 00 60 00 00 00 00 00 Example of wake-up by Timeout (7 seconds): Duration before Timeout = 256 * t_L * (WU period + 2) * (MaxSleep + 1) >>>0x07 0E 01 21 00 38 00 18 00 60 60 00 00 00 00 08 Example of switch from Active to Tag detector mode (wake-up by tag detection or low pulse on IRQ_IN pin) (32 kHz, inactivity duration = 272 ms, DAC oscillator = 3 ms, Swing = 63 pulses of 13.56 MHz): >>>0x07 0E 0A 21 00 79 01 18 00 20 60 60 64 74 3F 08 Example of a basic Idle command used during the Tag detection Calibration process: >>>0x07 0E 03 A1 00 F8 01 18 00 20 60 60 00 xx 3F 01 where xx is the DacDataH value.
	0E	Length of data	
	<WU Source>	Specifies authorized wake-up sources and the LFO frequency	
	EnterCtrlL	Settings to enter WFE mode	
	EnterCtrlH		
	WUCtrlL	Settings to wake-up from WFE mode	
	WUCtrlH		
	LeaveCtrlL	Settings to leave WFE mode (default value = 0x1800)	
	LeaveCtrlH		
	<WUPeriod>	Period of time between two tag detection bursts. Also used to specify the duration before Timeout.	
	<OscStart>	Defines the wait time for HFO to stabilize: <OscStart> * tL (Default value = 0x60)	
	<DacStart>	Defines the wait time for DAC to stabilize: <DacStart> * tL (Default value = 0x60)	
	<DacDataL>	Lower compare value for tag detection (1) . This value must be set to 0x00 during tag detection calibration.	
	<DacDataH>	Higher compare value for tag detection (1). This is a variable used during tag detection calibration.	
	<SwingsCnt>	Number of swings HF during tag detection (Default value = 0x3F)	
	<MaxSleep>	Max. number of tag detection trials before Timeout (1). This value must be set to 0x01 during tag detection calibration. Also used to specify duration before Timeout. MaxSleep must be: 0x00 < MaxSleep < 0x1F	

Direction	Data	Comments	Example
ST25R95 to Host	0x00	Result code	This response is sent only when ST25R95 exits WFE mode. <<<0x000101 Wake-up by Timeout <<<0x000102 Wake-up by tag detect <<<0x000108 Wake-up by low pulse on IRQ_IN pin
	0x01	Length of data	
	<Data>	bits function • 7:6 LFO prescaler: – 00: 1 (f_{LFO} =32 kHz) – 01: 2 (f_{LFO} =16 kHz) – 10: 4 (f_{LFO} =8 kHz) – 11: 8 (f_{LFO} =4 kHz) • 5 RFU • 4 Wake-up source: low pulse on SPI_SS • 3 Wake-up source: low pulse on IRQ_IN • 2 Wake-up source: field detected • 1 Wake-up source: tag detected • 0 Wake-up source: timeout	
ST25R95 to Host	0x82	Error code	<<<0x8200 Invalid command length
	0x00	Length of data	

1. *An initial calibration is necessary to determine DacDataL and DacDataH values required for leaving Tag Detector state. For more information, contact your ST sales office for the corresponding application note.*

5.9.1 Idle command parameters

The Idle command (Host to ST25R95) has the following structure (all values are hexadecimal):

Table 25. Idle command structure

07	0E	xx	yy zz	yy zz	yy zz	aa	bb	cc	dd ee	ff	gg
Command code	Data length	WU source	Enter Control	WU Control	Leave Control	WU Period	Osc Start	DAC Start	DAC Data	Swing Count	Max Sleep

Table 26. Summary of Idle command parameters

Parameter	Description	
Command code	This byte is the command code. ‘07’ represents the Idle command. This command switches the device from Active mode to WFE mode.	
Data length	This byte is the length of the command in bytes. Its value depends on the following parameter values.	
WU source	7:6	LFO Prescaler • 00: 1 (f_{LFO} = 32 kHz) • 01: 2 (f_{LFO} = 16 kHz) • 10: 4 (f_{LFO} = 8 kHz) • 11: 8 (f_{LFO} = 4 kHz)
	5	RFU
	4	Wake-up sources: Low pulse on SPI_SS
	3	Wake-up sources: Low pulse on IRQ_IN
	2	Wake-up sources: Field detection
	1	Wake-up sources: Tag detection
	0	Wake-up sources: Timeout

Parameter	Description
Enter control	These two bytes (EnterCtrlL and EnterCtrlH) define the resources when entering WFE mode (see Table 27. Ener, WU, and Leave Control resource configuration). Recommended values: • 0x0400: Hibernate • 0x0100: Sleep (or 0x2100 if Timer source is enabled) • 0x0142: Sleep (if Field detector source is enabled) • 0xA200: Tag detector calibration • 0x2100: Tag detection
WU control	These two bytes (WuCtrlL and WuCtrlH) define the wake-up resources (see Table 27. Ener, WU, and Leave Control resource configuration). • 0x0400: Hibernate • 0x3800: Sleep/Field detector • 0xB801: Tag detector calibration • 0x3801: Tag detection
Leave control	These two bytes (LeaveCtrlL and LeaveCtrlH) define the resources when returning to Ready state (see Table 27. Ener, WU, and Leave Control resource configuration). Recommended values: • 0x1800: Hibernate • 0x1800: Sleep/Field detector • 0x1800: Tag detector calibration • 0x1800: Tag detection
WU period	This byte is the coefficient used to adjust the time allowed between two tag detections. Also used to specify the duration before Timeout (Typical value: 0x20). Duration before Timeout = 256 * t_L * (WU period + 2) * (MaxSleep + 1)
Osc start	This byte defines the delay for HFO stabilization (recommended value: 0x60). Defines the Wait time for HFO to stabilize: <OscStart> * tL
DAC start	This byte defines the delay for DAC stabilization. (Recommended value: 0x60) Defines the Wait time for DAC to stabilize: <DacStart> * tL
DAC data	These two bytes (DacDataL and DacDataH) define the lower and higher comparator values, respectively. These values are determined by a calibration process. When using the demonstration board these values should be set to approximately 0x64 and 0x74, respectively.
Swing count	This byte defines the number of HF swings allowed during Tag detection. (Recommended value: 0x3F)
Max sleep	This byte defines the maximum number of tag detection trials or the coefficient to adjust the maximum inactivity duration before Timeout. MaxSleep must be: 0x00 < MaxSleep < 0x1F This value must be set to 0x01 during tag detection calibration. Also used to specify duration before Timeout. Duration before Timeout = 256 * t_L * (WU period + 2) * (MaxSleep + 1) (Typical value: 0x28)

Table 27. Ener, WU, and Leave Control resource configuration

Byte/bit		Function	Comments
CtlrL (byte YY)	7:2	RFU	Must be set to '0'
	1	Field detector disabled • 0 = Field detector disabled • 1 = Field detector enabled	-
	0	IREF • 0 = IREF disabled • 1 = IREF enabled	Must to be set to 1 in WUCtrLl for tag detection operations, otherwise must be put to 0
CtlrH (byte ZZ)	7	DAC compare index for the first comparison • 0 = DacDataL • 1 = DacDataH	-
	6	RFU	Must be set to '0'
	5	LFO enable • 0 = LFO disabled • 1 = LFO enabled	Must be set to 1 in WUCtrlH
	4	HFO enable • 0 = HFO disabled • 1 = HFO enabled	Must be set to 1 in WUCtrll
	3	VDDA enable • 0 = VDDA disabled • 1 = VDDA enabled	Must be set to use HFO
	2	Hibernate state enable • 0 = Hibernate state disabled • 1 = Hibernate state enabled	-
	1	RFU	-
	0	Sleep state enable • 0 = Sleep state disabled • 1 = Sleep state enabled	-

5.9.2 Using LFO frequency setting to reduce power consumption

In WFE mode, the high frequency oscillator (HFO) is stopped and most processes being executed are clocked by the low frequency oscillator (LFO). To minimize the ST25R95 power consumption in WFE mode select the lowest LFO frequency.

Example 1: Setting a lower LFO frequency

The following equation defines a basic timing reference:

t_{REF} = 256*t_L ms (where t_L = 1/f_{LFO})

t_{REF} = 8 ms (when <WU Source> bits [7:6] are set to “00”, or 32 kHz)

t_{REF} = 64 ms (when <WU Source> bits [7:6] are set to “11”, or 4 kHz)

5.9.3 Optimizing wake-up conditions

Using the Wake-up source register, it is possible to accumulate sources for a wake-up event. It is strongly recommended to always set an external event as a possible wake-up source.

To accumulate wake-up sources, simply set the corresponding bits in the Wake-up source register. For example, to enable a wake-up when a tag is detected (bit 1 set to ‘1’) or on a low pulse on pin $\overline{\text{IRQ_IN}}$ (bit 3 set to ‘1’), set the register to 0x0A.

5.9.4 Using various techniques to return to ready state

The Idle command and reply set offers several benefits to users by enabling various methods to return the ST25R95 to Ready state. Some methods are nearly automatic, such as waiting for a timer overflow or a tag detection, but others consume more power compared to the ones requesting a host action. A description of each method follows below.

Default setting: from POR to ready state

After power-on, the ST25R95 enters Power-up state.

To wake up the ST25R95 and set it to Ready state, the user must send a low pulse on the $\overline{\text{IRQ_IN}}$ pin. The ST25R95 then automatically selects the external interface (SPI) and enters ready state and is able to accept commands after a maximum delay of 10 ms (t_3).

From ready state to hibernate state and back to ready state

In Hibernate state, most resources are switched off to achieve an ultra-low power consumption.

The only way the ST25R95 can wake-up from Hibernate state is by an external event (low pulse on pin $\overline{\text{IRQ_IN}}$).

A basic Idle command is:

```
>>>0x07 0E 08 04 00 04 00 18 00 00 00 00 00 00 00 00
```

Note: The wake-up flag value is NOT significant when returning to Ready state from hibernate state or after a POR.

From ready state to sleep state and back to ready state

Wake-up by external event (low pulse on $\overline{\text{IRQ_IN}}$ or $\overline{\text{SPI_SS}}$ pin)

In sleep or power-up states, operating resources are limited in function of the selected wake-up source to achieve a moderate power consumption level.

An Idle command example when wake-up source is pin $\overline{\text{IRQ_IN}}$:

```
>>>0x07 0E 08 01 00 38 00 18 00 00 60 00 00 00 00 00
```

A similar command can be implemented using pin $\overline{\text{SPI_SS}}$ as a wake-up source:

```
>>>0x07 0E 10 01 00 38 00 18 00 00 60 00 00 00 00 00
```

Wake-up by timeout

The LFO is required to use the timer. However, this increases the typical power consumption by 80 µA. Several parameters can be modified to reduce power consumption as much as possible.

The duration before timeout is defined by parameters WU period and MaxSleep, respectively 0x60 and 0x08 in the following example.

Duration before timeout = 256 * t_L * (WU period + 2) * (MaxSleep + 1)

Note: 0x00 < MaxSleep < 0x1F.

An Idle command example when wake-up source is timer (0x01) when f_{LFO} = 32 kHz (mean power consumption is 25 µA)

```
>>>0x07 0E 01 21 00 38 00 18 00 60 60 00 00 00 00 08
```

An Idle command example when wake-up source is timer (0xC1) when f_{LFO} = 4 kHz (mean power consumption is 20 µA):

```
>>>0x07 0E C1 21 00 38 00 18 00 60 60 00 00 00 00 08
```

The same command can be used mixing a timer and the $\overline{\text{IRQ_IN}}$ pin (0xC9) as a wake-up source:

```
>>>0x07 0E C9 21 00 38 00 18 00 60 60 00 00 00 00 08
```

Wake-up by tag detection

In this mode, the typical consumption varies widely in function of parameter settings (WU period without RF activity and Swing Count defining the RF burst duration). Using default settings, consumption in the range of 100 µA can be achieved.

Tag detector is a state where ST25R95 is able to detect an RF event, a wake-up will occur when a tag sufficiently modifies the antenna load and is detected by the ST25R95.

An Idle command example when wake-up source is tag detection (0x02):

```
>>>0x07 0E 02 21 00 38 01 18 00 20 60 60 64 74 3F 08
```

The same command can be used mixing Tag detection and the $\overline{\text{IRQ_IN}}$ pin (0x0A) as a wake-up source:

```
>>>0x07 0E 0A 21 00 38 01 18 00 20 60 60 64 74 3F 08
```

The tag detection sequence is defined by dedicated parameters:

- WU source (Byte 3), see Table 56. Wake-up source register
  - The Timeout bit (bit 0) must be set to ‘1’ in order to manage a certain number of emitted bursts. Otherwise, bursts will be sent indefinitely until a stop event occurs (for example, tag detection or a low pulse on pin $\overline{\text{IRQ_IN}}$).
  - The tag detect bit (bit 1) must be set to ‘1’ to enable RF burst emissions.
  - It is recommended to also set bits 3 or 4 to ‘1’ to ensure that it is possible to leave tag detect mode via an external event (for example, a low pulse on pin $\overline{\text{IRQ_IN}}$).
- WU period (Byte 10): Defines the period of inactivity ($t_{INACTIVE}$) between two RF bursts:

  $t_{INACTIVE}$ = (WuPeriod + 2) * t_{REF}
- OscStart, DacStart (Bytes 11 and 12): Define the set-up time of the HFO and Digital analog converter, respectively. In general, 3 ms is used both set-up times.

  HFO | DAC set-up time = (OscStart | DacStart) * t_L
- DacDataL, DacDataH (Bytes 13 and 14): Reference level for tag detection (calculated during the tag detection calibration process).
- SwingsCnt (Byte 15): Represents the number of 13.56 MHz swings allowed during a tag detection burst. It is recommend to use 0x3F.
- Maxsleep (Byte 16): The ST25R95 emits (MaxSleep +1) bursts before leaving tag detection mode if bit 0 (timer out) of the WU source register is set to ‘1’. Otherwise, when this bit is set to ‘0’, a burst is emitted indefinitely.

Note: Use bytes 4 to 9 as shown in the examples in Section 5.9 Idle command (0x07) description.

The MaxSleep value is coded on the 5 least significant bits, hence 0x00 < MaxSleep < 0x1F.

All the previously described command parameters must be chosen accordingly for the initial tag detection calibration when setting up the ST25R95.

Their value will impact tag detection efficiency, and ST25R95 power consumption during tag detection periods.

5.9.5 Tag detection calibration procedure

The Idle command allows the use of a tag detection as a wake-up event. Certain parameters of the Idle command are dedicated to setting the conditions of a tag detection sequence.

During the tag detection sequence, the ST25R95 regularly emits RF bursts and measures the current in the antenna driver I_{DRIVE} using the internal 6-bit DAC.

When a tag enters the ST25R95 antenna RF operating volume, it modifies the antenna loading characteristics and induces a change in I_{DRIVE}, and consequently, the DAC data register reports a new value.

This value is then compared to the reference value established during the tag detection calibration process. This enables the ST25R95 to decide if a tag has entered its operating volume.

The reference value (DacDataRef) is established during a tag detection calibration process using the ST25R95 application setting with no tag in its environment.

The calibration process consists in executing a tag detection sequence using a well-known configuration, with no tag within the antenna RF operating volume, to determine a specific reference value (DacDataRef) that will be reused by the host to define the tag detection parameters (DacDataL and DacDataH).

During the calibration process, DacDataL is forced to 0x00 and the software successively varies the DacDataH value from its maximum value (0xFE) to it minimum value (0x00). At the end of the calibration process, DacDataRef will correspond to the value of DacDataH for which the wake-up event switches from Timeout (no tag in the RF field) to tag detected.

To avoid too much sensitivity of the tag detection process, it is recommended to use of a guard band. This value corresponds to two DAC steps (0x08).

Recommended guard band value:

DacDataL = DacDataRef – Guard and DacDataH = DacDataRef + Guard

The parameters used to define the tag detection calibration sequence (clocking, set-up time, burst duration, etc.) must be the same as those used for the future tag detection sequences.

When executing a tag detection sequence, the ST25R95 compares the DAC data register value to th DAC Data parameter values (DacDataL and DacDataH) included in the Idle command. The ST25R95 will exit WFE mode through a Tag detection event if the DAC data register value is greater than the DAC Data parameter high value (DacDataH) or less than the DAC Data parameter low value (DacDataL). Otherwise, it will return to Ready state after a Timeout.

An example of a basic Idle command used during the Tag detection Calibration process:

`>>>0x07 0E 03 A1 00 F8 01 18 00 20 60 60 00 xx 3F 01`

where xx is the DacDataH value.

5.10 Read Register (RdReg) command (0x08) description

This command is used to read the ACC_A, ARC_B, or Wakeup register.

Table 28. RdReg command description

Direction	Data	Comments	Example
Host to ST25R95	`0x08`	Command code	Ex 1. >>>`0x080369690100` (1) Reads the ACC_A or ARC_B register. Ex 2. >>>`0x0803620100` Reads the wakeup event register.
	`0x03`	Length of data	
	`0x62` or `0x69`	Register address	
	`0x01`	Register size	
	`0x00`	ST Reserved	
ST25R95 to Host	`0x00`	Result code	Ex 1. >>> `0x000113` (ARC_B register) Depth = 1, Gain = 3. See Write Register description for more information on received data. Ex 2. >>>`0x000101` Wakeup by timeout Ex 3. >>>`0x000102` Wakeup by tag detect
	`<Len>`	Length of data (= RegCount)	
	`<RegData>`	Register data	
ST25R95 to Host	`0x82`	Error code	`<<<0x8200` Invalid command length
	`0x00`	Length of data	

1. *This command must be preceded by the setting of the ACC_A register index (`0x0903680004`) or by setting the ARC_B register index (`0x0903680001`).*

Note: The Management of the analog register configuration register (ACC_A or ARC_B) is described in Section 5.11 Write Register (WrReg) command (0x09) description.

5.11 Write Register (WrReg) command (0x09) description

The Write Register (WrReg) command (0x09) is used to:

- set the Analog Register Configuration address index value before reading or overwriting the Analog Register Configuration register (ARC_B) value
- set the Analog Register Configuration register (ACC_A) value
  - bits [7:6] are ST reserved and must be set to '0'
  - bits [5:4] set the demodulator sensitivity ('00' = AM 10% or '10' = AM 100%)
  - bits [3:0] set the Load modulation index ('0001' = minimum load modulation, '0111' = default value, '1111' = maximum load modulation). The user can adjust this value to better fit its application.
- set the Timer window (TimerW) value used to improve ST25R95 demodulation when communicating with ISO/IEC 14443 Type A tags
- set the AutoDetect Filter used to help synchronization of ST25R95 with FeliCa™ tags
- configure the HF2RF bit

Note: When the HF2RF bit is '0', Reader mode is possible (default mode). When set to '1', VPS_TX power consumption is reduced (Ready mode).

5.11.1 Improving RF performance

Adjusting the Modulation Index and Receiver Gain parameters in reader mode or the Load modulation index and Demodulator sensitivity parameters in card emulation mode can help to improve application behavior.

Modulation index and receiver gain parameters for reader mode

The default values of these parameters (Table 35. ARC_B default code for available reader protocols) are set by the ProtocolSelect command, but they can be overwritten using the Write Register (WrReg) command (0x09). Table 31. Possible modulation index values and Table 32. Possible receiver gain values list possible values for the Modulation Index and Receiver Gain parameters, respectively.

This new configuration is valid until a new ProtocolSelect or Write Register (of register ARC_B) command is executed. Register values are cleared at power off.

Table 29. WrReg command description (Modulation index and receiver gain)

Direction	Data	Comments	Example
Host to ST25R95	0x09	Command code	>>>0x090468010113 Update ARC_B value to 0x13 >>>0x0903680001 Set Analog Register Index to 0x01 (ARC_B)(1)
	0x03 or 0x04	Length of data	
	0x68	Analog Register Configuration address index	
	0x00 or 0x01	Flag Increment address or not after Write command	
	0x01	Index pointing to the Modulation Index and Receiver Gain values in the ARC_B register (0x01) (see Section 5.11.1 Improving RF performance)	
	0xXX	New value for Modulation Index and Receiver Gain nibbles (see Section 5.11.1 Improving RF performance)	
ST25R95 to Host	0x00	Result code	<<<0x0000 Register written
	0x00	Length of data	

1. *This command must be executed before reading the ARC_B register (0x0803690100).*

Load modulation index and demodulator sensitivity parameters for card emulation mode

The default value of these parameters (Table 35. ARC_B default code for available reader protocols) is set by the ProtocolSelect command, but they can be overwritten using the Write Register (WrReg) command (0x09). Table 33. Possible load modulation index values and Table 34. Possible demodulator sensitivity values list possible values for the load modulation index and Demodulator Sensitivity parameters respectively.

This new configuration is valid until a new ProtocolSelect or Write Register (of register ACC_A) command is executed. Register values are cleared at power off.

Table 30. WrReg command description (Load modulation index and demodulator sensitivity)

Direction	Data	Comments	Example
Host to ST25R95	0x09	Command code	
	0x03 or 0x04	Length of data	
	0x68	Analog Register Configuration address index	>>>0x0903680004
	0x00 or 0x01	Flag Increment address or not after Write command	Set Analog Register Index to 0x04 (ACC_A) (1)
	0x04	Index pointing to the Demodulator Sensitivity and Load Modulation values in ACC_A register (0x04) (see)Section 5.11.1 Improving RF performance	>>>0x090468010425
	0xXX	New value for Demodulator Sensitivity and Load Modulation (see)Section 5.11.1 Improving RF performance	Update ACC_A to 0x25
ST25R95 to Host	0x00	Result code	<<<0x0000
	0x00	Length of data (= RegCount)	Register written

1. *This command must be executed before reading the ACC_A register (0x0903680004).*

How to modify analog register configuration register (ARC_B) values

- **Use the ProtocolSelect command (0x02) to select the correct communication protocol.**

  For example, to select the FeliCa™ protocol:

  - Send ProtocolSelect command: >>>0x02020451
  - ST25R95 reply <<<0x0000

- **Read the analog register configuration register (ARC_B) value.**

  - Write the ARC_B register index at 0x01: >>>0x0903680001
  - ST25R95 reply: <<<0x0000
  - Read the ARC_B register value: >>>0x0803690100
  - ST25R95 reply: <<<0x00015F

  In this example, the ARC_B register value is 0x5F, where “5” is the modulation index and “F” is the receiver gain.

- **Modify the Modulation Index and Receiver Gain values with 0x23.**

  - Write the ARC_B register index: >>>0x090468010123
  - ST25R95 reply: <<<0x0000
  - **Read the Analog Configuration register (ARC_B) value**
  - Write the ARC_B register index at 0x01: >>>0x0903680001
  - ST25R95 reply: <<<0x0000
  - Read the ARC_B register value: >>>0x0803690100
  - ST25R95 reply: <<<0x000123

Modulation index and receiver gain values

Table 31. Possible modulation index values

Code	1	2	3	4	5	6	D
Modulation Index (1)	10%	17%	25%	30%	33%	36%	95%

1. *Characterized only using ISO/IEC 10373 test set-up.*

Table 32. Possible receiver gain values

Code	0	1	3	7	F
Receiver Gain (1)	34 dB	32 dB	27 dB	20 dB	8 dB

1. *Characterized by design simulation.*

How to modify analog register configuration register (ACC_A) values

- **Use the ProtocolSelect command (0x02) to select the correct communication protocol.**

  For example, to select the ISO/IEC 14443-A card emulation protocol:

  - Send ProtocolSelect command: >>>0x02021208
  - ST25R95 reply <<<0x0000

- **Read the analog register configuration register (ACC_A) value.**

  - Write the ACC_A register index at 0x04: >>>>>0x0903680004
  - ST25R95 reply: <<<0x0000
  - Read the ACC_A register value: >>>0x0803690100
  - ST25R95 reply: <<<0x000127

  In this example, the ACC_A register value is 0x27, where “2” is the demodulator sensitivity and “7” is the load modulation index.

- **Modify the load modulation index values with 0x25.**

  - Write the ARC_A register index: >>>0x090468010425
  - ST25R95 reply: <<<0x0000
  - **Read the analog configuration register (ACC_A) value.**
  - Write the ACC_A register index at 0x04: >>>0x0903680004
  - ST25R95 reply: <<<0x0000
  - Read the ARC_A register value: >>>0x0803690100
  - ST25R95 reply: <<< <<<0x000125

Load modulation index and demodulator sensitivity values

Table 33. Possible load modulation index values

Code (bits [3:0] of ACC_A register)	1	2	...	7	...	E	F
Load modulation index	Min.	-	-	Default	-	-	Max.

Table 34. Possible demodulator sensitivity values

Code (bits [5:4] of ACC_A register)	0x1	0x2
Demodulator Sensitivity (1)	10%	100%

1. *Characterized by design simulation.*

Note: Bits [7:6] of ACC_A register are RFU and must set to ‘0’.

Default code per protocol

Table 35. ARC_B default code for available reader protocols

Communication protocol	Default value	Possible modulation index values (MS nibble)	Possible receiver gain values (LS nibble)
ISO/IEC 14443 Type A reader	0xDF	0xD	0x0, 0x1, 0x3, 0x7 or 0xF
ISO/IEC 14443 Type B reader	0x20	0x1, 0x2, 0x3 or 0x4	0x0, 0x1, 0x3, 0x7 or 0xF
FeliCa™ reader	0x50	0x1, 0x2, 0x3 or 0x4	0x0, 0x1, 0x3, 0x7 or 0xF
ISO/IEC 15693 reader 10%	0x53	0x4, 0x5 or 0x6	0x0, 0x1, 0x3, 0x7 or 0xF
ISO/IEC 15693 reader 100%	0xD3	0xD	0x0, 0x1, 0x3, 0x7 or 0xF

Table 36. ACC_A default code for available card emulation protocols

Communication protocol	Default value	Recommended values for ST25R95 demonstration board	Possible Demodulator sensitivity values (MS nibble)	Possible load modulation index values (LS nibble)
ISO/IEC 14443 Type A	0x27	0x27	0x2	From 0x1 to 0xF

5.11.2 Improving frame reception for ISO/IEC 14443 Type A tags

To improve ST25R95 demodulation when communicating with ISO/IEC 14443 Type A tags, it is possible to adjust the synchronization between digital and analog inputs by fine-tuning the Timer Window (TimerW) value. This can be done using the Write Register (WrReg) command to set a new TimerW value (min. 0x50, max. 0x60). The recommended value is 0x56 or 0x58 when using the ST25R95 demo board.

The default value of this parameter (0x52) is set by the ProtocolSelect command, but it can be overwritten using the WrReg command (`0x09`).

Table 37. WrReg command description (Timer Window)

Direction	Data	Comments	Example
Host to ST25R95	`0x09`	Command code	>>>`0x09043A005804` Set recommended TimerW value.
	`0x03` or `0x04`	Length of data	
	`0x3A`	Timer Window (TimerW) value	
	`0x00` or `0x01`	Flag Increment address or not after Write command	
	`0xXX`	Set TimerW value (recommended value is 0x56 or 0x58)	
	`0x04`	TimerW value confirmation	
ST25R95 to Host	`0x00`	Result code	<<<0x0000 Register written
	`0x00`	Length of data	

5.11.3 Improving RF reception for FeliCa™ tags

To improve ST25R95 reception when communicating with FeliCa™ tags, it is possible to enable an AutoDetect filter to synchronize FeliCa™ tags with the ST25R95. This can be done using the Write Register (WrReg) command to enable the AutoDetect filter.

By default, this filter is disabled after the execution of the ProtocolSelect command, but it can be enabled using the WrReg command (0x09).

Table 38. WrReg command description (AutoDetect Filter)

Direction	Data	Comments	Example
Host to ST25R95	0x09	Command code	>>>0x09040A0102A1 Enable the AutoDetect filter.
	0x03 or 0x04	Length of data	
	0x0A	AutoDetect filter control value	
	0x00 or 0x01	Flag Increment address or not after Write command	
	0x02	AutoDetect filter enable	
	0xA1	AutoDetect filter confirmation	
ST25R95 to Host	0x00	Result code	<<<0x0000 Register written
	0x00	Length of data	

5.12 AC filter command (0x0D) description

This command activates/deactivates the anti-collision filter in Type A card emulation mode. The following tables define the command and response fields depending on the AC filter command length.

Table 39. AC filter command description (Command <Len> > 0x02)

Direction	Data	Comments	Example
Host to ST25R95	0D	Command code	General case (LEN ≠ 0x00, 0x01 or 0x02)
	<Len>	Length of data	>>>0D0B4403208802517 44AEF2280
	<ATQA> (2 bytes)	Unused and proprietary bits of SAK (protocol bits will be handled by firmware)	Activate filter for 2-cascade anti-collision Note that the command length can be 7, 11 or 15 bytes depending on UID length: 7: for 1-cascade level filter 11: for 2-cascade levels filter 15: for 3-cascade levels filter All other values greater than 2 will result in an 'Invalid command length' error.
	<SAK>	Unused and proprietary bits of SAK (protocol bits will be handled by firmware)	*** Special cases of command *** LEN = 0x00 >>>0x0D00 De-activate AC Filter (LEN = 0x00) <<< 0x0001XX0000 AC Filter is successfully deactivated (See Table 40. state when behaving as ISO/IEC 14443-A tag
	<UID part 1>	UID for cascade level 1 (Mandatory)	LEN = 0x01 >>>0x0D01XX - Set AC state (see table below)
	<UID part 2>	UID for cascade level 2 (Optional)	<<< 0x0000 AC state successfully set LEN = 0x02 >>> 0x0D020000 - Returns AC state without deactivating filter
	<UID part 3>	UID for cascade level 3 (Optional)	<<< 0x0001XX AC state (See Table 40. state when behaving as ISO/IEC 14443-A tag)
ST25R95 to Host	00	Result code	AC Filter is successfully activated.
	00	Length of data	<<<0x0000 Set State: >>>> 0D0101 <<<< 0000
ST25R95 to Host	82	Error code	<<<0x8200
	00	Length of data	Invalid command length
ST25R95 to Host	00	Result code	Get state
	01	Length of data	>>> 0D020000
	<state>	AC state (See Table 40. state when behaving as ISO/IEC 14443-A tag)	<<< 000101 Deactivate AC Filter: >>> 0D00 <<< 000101

Table 40. state when behaving as ISO/IEC 14443-A tag

Value	AC state
0x00	Idle
0x01	ReadyA
0x04	Active
0x80	Halt
0x81	ReadyA*
0x84	Active*

The AC filter command activates or deactivates an anti-collision filter for ISO/IEC 14443A card protocol. This command also forces or indicates the card emulator state.

If the AC filter is not activated, all received commands are stored in the ST25R95 buffer before being read by the external microcontroller.

If the AC filter is activated, internal firmware will try to interpret the commands sent by the reader itself and perform an anti-collision sequence. The internal state machine of the AC filter also handles the SLP_REQ command and changes the AC state accordingly, in order to have the proper handling of the SENS_REQ and ALL_REQ commands in the various state. Non-interpreted commands are stored in the ST25R95 buffer before being read by the external microcontroller to perform card emulation.

The ST25R95 is able to interpret and respond to the commands listed in the table below. The device remains in Listening mode after executing these commands.

The ST25R95 handles those commands as long as the AC filter is active.

Table 41. Commands to which the device is able to react

Command	Code	Definition
SENS_REQ	26 (7-bit)	Sense request
ALL_REQ	52 (7-bit)	WakeUp All request
SDD_REQ	93, 95, 97	Single device detection request
SEL_REQ	9370, 9570, 9770	Select request
SLP_REQ	5000	Sleep request

5.13 Echo command (0x55) description

The Echo command verifies the possibility of communication between a Host and the ST25R95. The ST25R95 will exit the listen mode upon reception of an echo command. This can be used to stop listen mode (see Section 5.7 Listen command (0x05) description).

Table 42. Echo command description

Direction	Data	Comments	Example
Host to ST25R95	0x55	Command code	-
ST25R95 to Host	0x55	Code response	>>> 0x55: Sends an Echo command <<< 0x55: Response to an Echo command

Table 43. Echo command in listen mode

Direction	Data	Comments	Example
Host to ST25R95	0x55	Command code	-
ST25R95 to Host	0x55	Code response	>>> 0x55: Echo command <<< 0x558500: Listening mode was cancelled by the application
	0x85	Error response	
	0x00	Length of data	

6 Electrical characteristics

6.1 Absolute maximum ratings

Table 44. Absolute maximum ratings

Symbol	Parameter	Value	Unit
VPS_Main	Supply voltage (1)	–0.3 to 7.0	V
VPS_TX	Supply voltage (RF drivers)	–0.3 to 7.0	V
V_{IO}	Input or output voltage relative to ground	–0.3 to VPS_Main +0.3	V
$V_{MaxCarrier}$	Maximum input voltage (pins RX1 and RX2)	±14.0	V
T_A	Ambient operating temperature	–25 to +85	°C
	Ambient operating temperature (RF mode)	–25 to +85	
T_{STG}	Storage temperature (Please also refer to package specification).	–65 to +150	°C
T_{LEAD}	Lead temperature during soldering	See note (2)	°C
V_{ESD}	Electrostatic discharge voltage according to JESD22-A114, Human Body Model	2000	V
P_{TOT} (3)	Total power dissipation per package	1	W

1. *To properly reset the device, VPS_Main must be tied to 0V before executing the start-up sequence.*
2. *Compliant with JEDEC standard J-STD-020D (for small-body, Sn-Pb or Pb assembly), the ST ECOPACK® 7191395 specification, and the European directive on Restrictions on Hazardous Substances (RoHS directive 2011/65/EU of July 2011).*
3. *Depending on the thermal resistance of package.*

Note: Stresses listed above may cause permanent damage to the device. This is a stress rating only and functional operation of the device at these or any other conditions above those indicated in the operational sections of the specification is not implied.

Exposure to absolute maximum rating conditions for extended periods may affect device reliability.

6.2 DC characteristics

Table 45. DC characteristics

Symbol	Parameter	Condition	Min.	Typ.	Max.	Unit
VPS_Main	Supply voltage	-	2.7	3.0	5.5	V
VPS_TX	Supply voltage (RF drivers)	-	2.7	3.0	5.5	V
V_{IL}	Input low voltage (I/Os)	-	0	-	0.2 x VPS_Main	V
V_{IH}	Input high voltage (I/Os)	-	0.7 x VPS_Main	-	VPS_Main	V
V_{OH}	Output high voltage (I/Os)	I_{OH} = - 8 µA	0.7 x VPS_Main	-	VPS_Main	V
V_{OL}	Output low voltage (I/Os)	I_{OLMAX} = 500 µA	0	-	0.15 x VPS_Main	V
POR	Power-on reset voltage	-	-	1.8	-	V

6.3 Power consumption characteristics

T_A = –25 °C to 85 °C, unless otherwise specified.

Table 46. Power consumption characteristics (VPS_Main from 2.7 to 3.3 V)

Symbol	Parameter	Condition	Typ.	Max.	Unit
I_{CC} (VPS) Power-up	Supply current in power-up state	T_A = 25°C	200	600	µA
I_{CC} (VPS) Card emulation	Supply current in card emulation mode	T_A = 25 °C	2.5	5.0	mA
I_{CC} (VPS) Hibernate	Supply current in Hibernate state	T_A = 25 °C	1	5	µA
I_{CC} (VPS) Sleep/Field Detector	Supply current in Sleep/Field Detector state	T_A = 25 °C	20/25	80	µA
I_{CC} (VPS) Ready	Supply current in Ready state	T_A = 25 °C	2.5	5.0	mA
I_{CC} (VPS) Tag Detect	Average supply current in Tag Detector state	T_A = 25 °C, 4 RF bursts per second	50	100	µA

The ST25R95 supports two VPS_TX supply ranges for RF drivers: 2.7V to 3.3V or 4.5V to 5.5V. Antenna matching circuit must be defined accordingly.

Table 47. Power consumption characteristics (VPS_TX from 2.7 to 3.3 V)

Symbol	Parameter	Condition	Typ.	Max.	Unit
I_{CC} RF (VPS_TX) RF Field ON	Supply current in RF Field (Reader mode) (1)	T_A = 25 °C	70	100	mA
I_{CC} RF (VPS_TX) RF Field OFF	Supply current in RF Field (Ready mode) (2)	T_A = 25 °C	-	200	µA
I_{CC} RF (VPS_TX) Tag Detect	Peak current during Burst detection (3)	T_A = 25 °C	70	100	mA

1. *Parameter measured using recommended output matching network (Z load is 27 Ω and 0°).*
2. *This consumption can be reduced to approximately 2 µA (typ.) by setting a control bit (bit HF2RF) to '1' using command `090468010710`. In this case, Reader mode is not available. To re-enable Reader mode, reset the HF2RF bit to '0' using the command 090468010700 or execute a new ProtocolSelect command.*
3. *The maximum differential input voltage between pins RX1 and RX2 (VRx1-Rx2) has a peakpeak of 18 V.*

Table 48. Power consumption characteristics (VPS_TX from 4.5 to 5.5 V)

Symbol	Parameter	Condition	Typ.	Max.	Unit
I_{CC} RF (VPS_TX) RF Field ON	Supply current in RF Field (Reader mode) (1)	T_A = 25 °C	120	200	mA
I_{CC} RF (VPS_TX) RF Field OFF	Supply current in RF Field (Ready mode) (2)	T_A = 25 °C	-	300	µA
I_{CC} RF (VPS_TX) Tag Detect	Peak current during Burst detection (3)	T_A = 25 °C	120	200	mA

1. *Parameter measured using recommended output matching network (Z load is 27 Ω and 0°C).*
2. *This consumption can be reduced to approximately 2 µA (typ.) by setting a control bit (bit HF2RF) to '1' using command `090468010710`. In this case, reader mode is not available. To re-enable Reader mode, reset the HF2RF bit to '0' using the command 090468010700 or execute a new ProtocolSelect command.*
3. *The maximum differential input voltage between pins RX1 and RX2 (VRx1-Rx2) has a peakpeak of 18 V. This voltage can be limited by adding a damping resistor in parallel of the antenna or between ST_Ro and ground.*

6.4 SPI characteristics

The ST25R95 supports (CPOL = 0, CPHA = 0) and (CPOL = 1, CPHA = 1) modes.

Table 49. SPI interface characteristics

Symbol	Parameter	Condition	Min.	Max.	Unit
f_{SCK} $1/ t_{c(SCK)}$	SPI clock frequency	-	-	2.0	MHz
V_{IL}	Input low voltage	-	-	0.3 x VPS	V
V_{IH}	Input high voltage	-	0.7 x VPS	-	
V_{OL}	Output low voltage	-		0.4 x VPS	
V_{OH}	Output high voltage	-	0.7 x VPS	-	
$t_{SU(NSS)}$ (1)	NSS setup time	-	70	-	ns
$t_{h(NSS)}$ (1)	NSS hold time	-	0	-	
$t_{CH(SCKL)}$ (1)	Clock low time	-	200	-	ns
$t_{CH(SCKH)}$ (1)	Clock high time	-	200	-	
$t_{SU(SI)}$ (1)	Data slave Input setup time	-	20	-	ns
$t_{h(SI)}$ (1)	Data slave Input hold time	-	80	-	
$t_{v(SO)}$ (1)	Data slave output valid time	-	-	80	ns
$t_{h(SO)}$ (1)	Data slave output hold time	After enable edge	0	-	
$C_{b_SPI_IN}$	Capacitive load for input pins NSS, CLK, MOSI	-	-	3	pF
$C_{b_SPI_OUT}$	Capacitive load for input pins MOSI	-	-	20	pF

1. *Values based on design simulation and/or characterization results, and not on tested in production.*

Figure 12. SPI timing diagram (Slave mode and CPOL = 0, CPHA = 0)

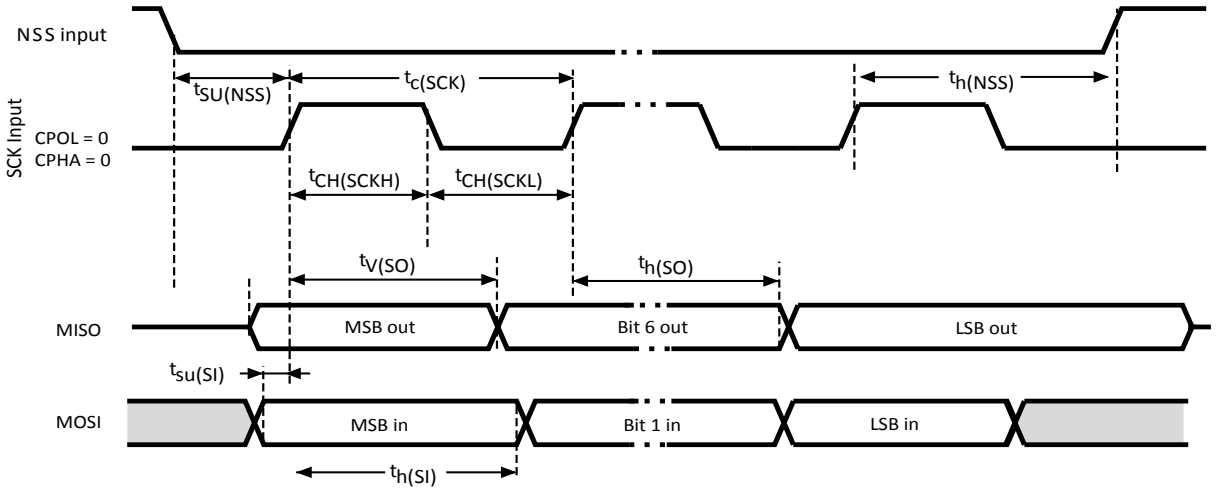

Figure 13. **SPI timing diagram (Slave mode and CPOL = 1, CPHA = 1)**

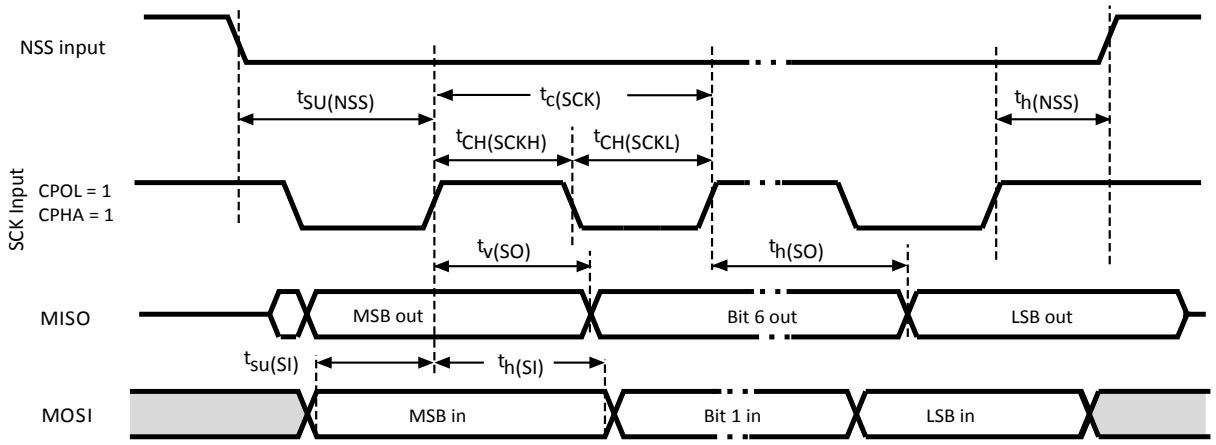

6.5 RF characteristics

Test conditions are T_A = 0°C to 50°C, unless otherwise specified.

VPS_TX = 3V ± 10% and VPS_MAIN = 3V ± 10%.

Table 50. **Tag/Card emulation characteristics**

Symbol	Parameter	Condition	Min.	Typ.	Max.	Unit
f_C	Frequency of operating field (carrier frequency)	-	13.553	13.56	13.567	MHz
MI carrier	Carrier modulation index from reader ISO/IEC 14443 -Type A	-	-	-	100	%
HField (1)	Operating field strength in ISO/IEC 14443	-	1.5	-	7.5	A/m
$V_{MaxCarrier}$	Input voltage between RX1 and RX2	-	-	-	18	V
f_S (1)	Frequency of Subcarrier modulation (ISO/IEC 14443 FeliCa and ISO/IEC 15693)	-	-	-	f_C / 16	
ALoad	Load Modulation Amplitude $f_C + f_S$ $f_C - f_S$	ISO 10373-6 test methods for ISO/IEC 14443-A @ 1.5 A/m	18 18	-	-	mV
	$f_C + f_S$ $f_C - f_S$	ISO 10373-6 test methods for ISO/IEC 14443-A @ 7.5A/m	8 8	-	-	mV
ALoad	Load Modulation Amplitude $f_C + f_S$ $f_C - f_S$	ECMA 356 test methods for ECMA 340 @ 1.5 A/m	18 18	-	-	mV
	$f_C + f_S$ $f_C - f_S$	ECMA 356 test methods for ECMA 340 @ 7.5 A/m	8 8	-	-	mV
DataR	ISO/IEC 14443 Type A	-	106	-	212	Kbps

1. *Maximum values based on design simulation and/or characterization results, and not tested in production.*
2. *Parameter measured on samples using recommended output matching network.*

Table 51. Field detection characteristics

Symbol	Parameter	Min.	Typ.	Max.	Unit
-	Level of detection (2)	0.5	-	8	A/m

1. *Parameter measured using recommended output matching network for ISO/IEC 14443 communication.*

Table 52. Reader characteristics

Symbol	Parameter	Min.	Typ.	Max.	Unit
f_C	Frequency of operating field (carrier frequency)	13.553	13.56	13. 567	MHz
MI Carrier	Carrier modulation index • ISO/IEC 14443-A (1) • ISO/IEC 14443-B • FeliCa • ISO/IEC 15693 (10% modulation)(2) • ISO/IEC 15693 (100% modulation)	- 8 8 10 80	-	100 14 14 30 100	%
Transmitter specifications (VPS_TX = 2.7 to 3.3 V)					
-	Z_{OUT} differential impedance between TX1 and TX2(1)	-	27	-	Ω
-	Output power for 3V operation on pin VPS_TX (2)	-	55	-	mW
Transmitter specifications (VPS_TX = 4.5 to 5.5 V)					
-	Z_{OUT} differential impedance between TX1 and TX2(1)	-	16	-	Ω
-	Output power for 5V operation on pin VPS_TX (1) (2)	-	230	-	mW
Receiver specifications					
-	Small signal differential input resistance (Rx1/Rx2)(1)	-	100	-	kΩ
VRx1-Rx2	Differential input voltage between pins RX1 and RX2 (3)	-	-	18	V
-	Small signal differential input capacitance (Cx1/Cx2)(1)	-	22	-	pF
-	Sensitivity (106 Kbps data rate) (4)	-	8	-	mV

1. *Maximum values based on design simulation and/or characterization results, and not tested in production.*
2. *Parameter measured on samples using recommended output matching network. (Z load is 27 Ω and 0°.)*
3. *This voltage can be limited by adding a damping resistor in parallel of the antenna or between ST_R0 and Ground.*
4. *Based on ISO/IEC 10373-6 protocol measurement. The reader sensitivity corresponds to the load modulation value of the REQ reply sent by an ISO reference card when decoded by the ST25R95.*

6.6 Oscillator characteristics

The external crystal used for this product is a 27.12 MHz crystal with an accuracy of ± 14 kHz.

Table 53. HFO 27.12 MHz oscillator characteristics

Symbol	Parameter	Conditions(1)(2)	Min.	Typ.	Max.	Unit
f_{XTAL}	Oscillator frequency	-	-	27.12	-	MHz
R_F	Feedback resistor	-	-	2	-	MΩ
C	Recommended load capacitance versus equivalent serial resistance of the crystal (R_S) (3)	R_S = 30 W	-	6	-	pF
$t_{SU(HFO)}$ (4)	Startup time	VPS stabilized	-	6	10	ms

1. *Resonator characteristics given by the crystal/ceramic resonator manufacturer.*
2. *Based on characterization, not tested in production.*
3. *The relatively low value of the R_F resistor offers a good protection against issues resulting from use in a humid environment, due to the induced leakage and the bias condition change. However, it is recommended to take this point into account if the Host is used in tough humidity conditions.*
4. *$t_{SU(HFO)}$ is the startup time measured from the moment it is enabled (by software) to when a stabilized 27.12 MHz oscillation is reached. This value is measured for a standard crystal resonator and it can vary significantly with the crystal manufacturer.*

For C_{L1} and C_{L2}, it is recommended to use high-quality external ceramic capacitors in the 10 pF to 20 pF range (typ.), designed for high-frequency applications, and selected to match the requirements of the crystal or resonator (see Figure 14. Typical application with a 27.12 MHz crystal). C_{L1} and C_{L2} are usually the same size. The crystal manufacturer typically specifies a load capacitance which is the series combination of C_{L1} and C_{L2}.

Figure 14. Typical application with a 27.12 MHz crystal

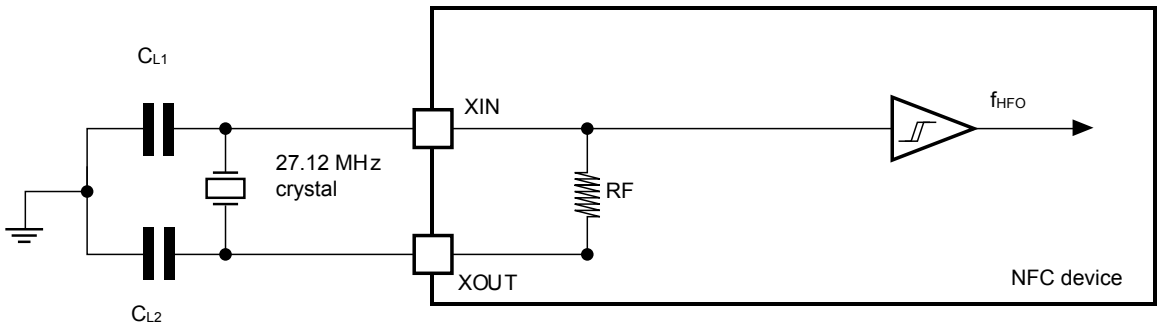

Note: For C_{L1} and C_{L2} it is recommended to use high-quality ceramic capacitors in the 10 to 20 pF range, selected to match the requirements of the crystal or resonator. C_{L1} and C_{L2}, have usually the same size. The crystal manufacturer typically specifies a load capacitance which is the series combination of C_{L1} and C_{L2}.

Load capacitance C_L has the following formula: $C_L = C_{L1} \times C_{L2} / (C_{L1} + C_{L2}) + C_{stray}$, where C_{stray} (typically between 2 and 7 pF) is the pin capacitance and board or trace PCB-related capacitance.

7 Package information

In order to meet environmental requirements, ST offers these devices in different grades of ECOPACK® packages, depending on their level of environmental compliance. ECOPACK® specifications, grade definitions and product status are available at www.st.com. ECOPACK® is an ST trademark.

7.1 VFQFPN32 package information

Figure 15. VFQFPN - 32 pins, 5x5 mm, 0.5 mm pitch very thin profile fine pitch quad flat package outline

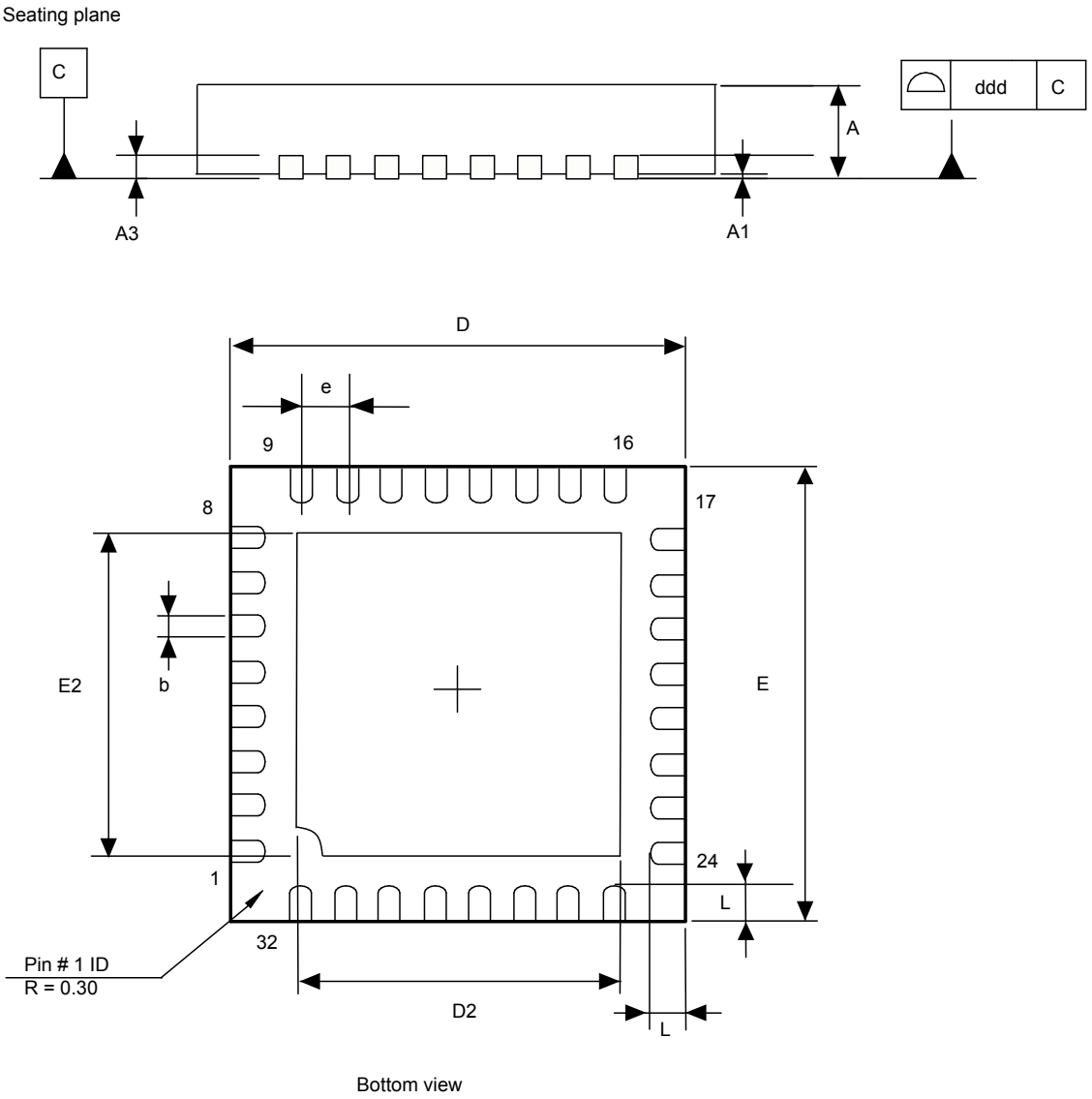

1. Drawing is not to scale.

Table 54. VFQFPN - 32 pins, 5x5 mm, 0.5 mm pitch very thin profile fine pitch quad flat package mechanical data

Symbol	millimeters			inches [1]		
	Min	Typ	Max	Min	Typ	Max
A	0.800	0.900	1.000	0.0315	0.0354	0.0394
A1	0.000	0.020	0.050	0.0000	0.0008	0.0020
A3	-	0.200	-	-	0.0079	-
b	0.180	0.250	0.300	0.0071	0.0098	0.0118
D	4.850	5.000	5.150	0.1909	0.1969	0.2028
D2	3.400	3.450	3.500	0.1339	0.1358	0.1378
E	4.850	5.000	5.150	0.1909	0.1969	0.2028
E2	3.400	3.450	3.500	0.1339	0.1358	0.1378
e	0.450	0.500	0.550	0.0177	0.0197	0.0217
L	0.300	0.400	0.500	0.0118	0.0157	0.0197
ddd	-	-	0.080	-	-	0.0031

1. *Values in inches are converted from mm and rounded to 4 decimal digits.*

Figure 16. VFQFPN - 32 pins, 5x5 mm, 0.5 mm pitch very thin profile fine pitch quad flat package recommended footprint

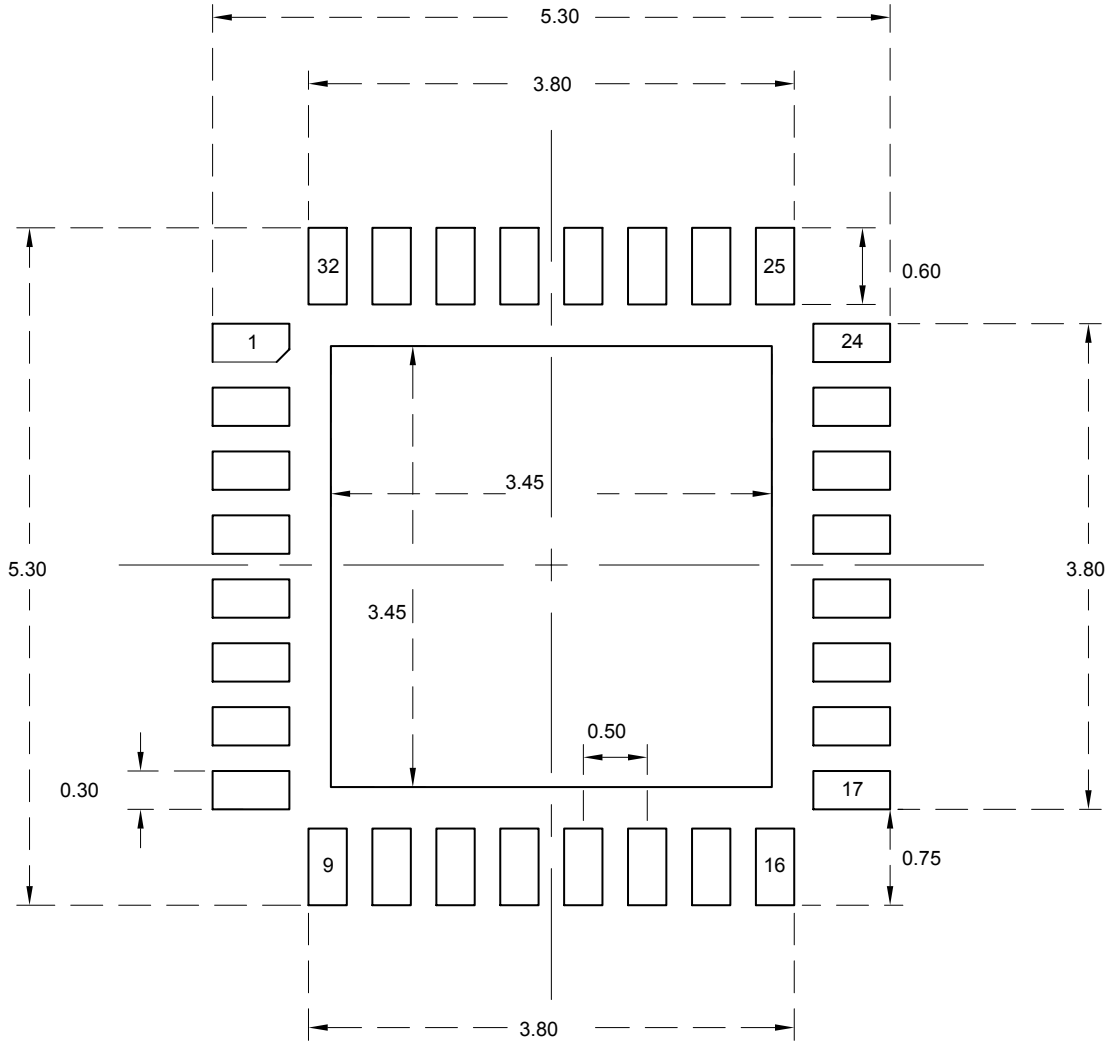

1. Dimensions are expressed in millimeters.

8 Ordering information

Table 55. Ordering information scheme

Example: ST25 R 95 -V MD 5 T

Device type

ST25 = NFC/RFID tags and readers

Product type

R = Reader

Product features

95 = Entry level NFC reader

Operating voltage

V = 2.7 to 5.5 V

Package

MD = 32 pin VFQFN (5 x 5 mm)

Operating temperature

5 = -25 to 85 °C

Packaging

T = Tape and reel

Not all combinations are necessarly available. For a list of available options (speed, package, etc.) or for further information on any aspect of this device, please contact your nearest STMicroelectronics sales office.

Note: Parts marked as “ES”, “E” or accompanied by an Engineering Sample notification letter, are not yet qualified and therefore not approved for use in production. ST is not responsible for any consequences resulting from such use. In no event will ST be liable for the customer using any of these engineering samples in production. ST’s Quality department must be contacted prior to any decision to use these engineering samples to run a qualification activity.

A Additional Idle command description

This section provides examples of use for the Idle command.

The wake-up source is the third of the 16 bytes in the Idle command. This byte specifies authorized Wake-up events. This revision now also provides the capability to set the LFO frequency in WFE mode.

The LFO frequency and the authorized wake-up source settings are stored in the Wake-up source register as the parameters of the Idle command.

The Wake-up event is updated by the ST25R95 when it exits WFE mode.

The contents of the Wake-up event register can be read using the Read Register command or in the ST25R95 reply to the Idle command.

Table 56. Wake-up source register

Bits [7:6]	Bit 5	Bit 4	Bit 3	Bit 2	Bit 1	Bit 0
LFO frequency	RFU (1)	IRQ on pin $\overline{\text{SPI_SS}}$	IRQ on pin $\overline{\text{IRQ_IN}}$	Field Detect	Tag Detect	Timeout

1. *Must be set to '0'.*

Table 57. Wake-up event register

Bits [7:6]	Bit 5	Bit 4	Bit 3	Bit 2	Bit 1	Bit 0
LFO frequency	RFU	IRQ on pin $\overline{\text{SPI_SS}}$	IRQ on pin $\overline{\text{IRQ_IN}}$	Field Detect	Tag Detect	Timeout

Bits [7:6] define the LFO frequency (f_{LFO}):

00: 32 kHz

01: 16 kHz

10: 8 kHz

11: 4 kHz

Bit 4: When set, the ST25R95 will wake up when an external interrupt (low level on pin $\overline{\text{SPI_SS}}$) is detected.

Bit 3: When set, the ST25R95 will wake up when an external interrupt (low level on pin $\overline{\text{IRQ_IN}}$) is detected. This is useful for SPI communication. It is recommended to set this bit to '1' in order to recover in the event of a system crash.

Bit 2: When set, the ST25R95 will wake up when an RF field is detected.

Bit 1: When set, the ST25R95 will wake up when a tag is detected in the RF field. This bit must also be set during Tag detection calibration or during a Tag detection sequence.

Bit 0: When set, the ST25R95 will wake up and return to Ready state at the end of a predefined cycle. The Timeout (TO) value is defined by the MaxSleep and Wake-up period:

$TO = (MaxSleep+1)*(WuPeriod+2)*t_{REF}$

$t_{REF} = 256*t_L = 8$ ms ($f_{LFO} = 32$ kHz), mean power consumption in sleep mode is 25 µA

$t_{REF} = 256*t_L = 64$ ms ($f_{LFO} = 4$ kHz), mean power consumption in sleep mode is 20 µA

Note: 0x00 < MaxSleep < 0x1F.

This bit must be set when using the timer as a possible wake-up source. It must be set during Tag detection calibration to force a wake-up after the first Tag detection trial.

Revision history

Table 58. **Document revision history**

Date	Revision	Changes
10-Dec-2018	1	Initial release.
13-Dec-2018	2	Updated: • Section 5.12 AC filter command (0x0D) description • Table 41. Commands to which the device is able to react
22-Jan-2019	3	Updated: • Figure 4. ST25R95 initialization and operating state change
26-Apr-2019	4	Updated Section 5.9 Idle command (0x07) description. Updated Table 52. Reader characteristics and Table 53. HFO 27.12 MHz oscillator characteristics. Updated Figure 12. SPI timing diagram (Slave mode and CPOL = 0, CPHA = 0) and Figure 13. SPI timing diagram (Slave mode and CPOL = 1, CPHA = 1). Minor text edits across the whole document.

Contents

1 **Description** 2
1.1 Block diagram 2
1.2 Clock management 3
1.3 Power supply 3
1.4 List of terms 3
2 **Pin and signal descriptions** 4
3 **Power management and operating modes** 6
3.1 Operating modes 6
3.2 Startup sequence 7
4 **Communication protocols** 9
4.1 Serial peripheral interface (SPI) 9
4.1.1 Polling mode 9
4.1.2 Interrupt mode 10
4.2 Error codes 11
4.3 Support of long frames 12
5 **Commands** 13
5.1 Command format 13
5.2 List of commands 13
5.3 IDN command (0x01) description 14
5.4 Protocol select command (0x02) description 14
5.5 Pollfield command (0x03) description 19
5.6 Send receive (SendRecv) command (0x04) description 20
5.7 Listen command (0x05) description 25
5.8 Send command (0x06) description 26
5.9 Idle command (0x07) description 28
5.9.1 Idle command parameters 29
5.9.2 Using LFO frequency setting to reduce power consumption 32
5.9.3 Optimizing wake-up conditions 32
5.9.4 Using various techniques to return to ready state 32

5.9.5 Tag detection calibration procedure . . . 33
5.10 Read Register (RdReg) command (0x08) description . . . 34
5.11 Write Register (WrReg) command (0x09) description . . . 34
5.11.1 Improving RF performance . . . 35
5.11.2 Improving frame reception for ISO/IEC 14443 Type A tags . . . 39
5.11.3 Improving RF reception for FeliCa™ tags . . . 40
5.12 AC filter command (0x0D) description . . . 41
5.13 Echo command (0x55) description . . . 42
6 Electrical characteristics . . . 44
6.1 Absolute maximum ratings . . . 44
6.2 DC characteristics . . . 44
6.3 Power consumption characteristics . . . 45
6.4 SPI characteristics . . . 46
6.5 RF characteristics . . . 47
6.6 Oscillator characteristics . . . 49
7 Package information . . . 50
7.1 VFQFPN32 package information . . . 50
8 Part numbering . . . 53
A Additional Idle command description . . . 54
Revision history . . . 55
Contents . . . 56
List of tables . . . 58
List of figures . . . 60

List of tables

Table 1. List of terms . . . 3
Table 2. ST25R95 pin descriptions . . . 5
Table 3. ST25R95 operating modes and states . . . 6
Table 4. Select serial communication interface selection table . . . 8
Table 5. Interpretation of flags . . . 10
Table 6. Possible error codes and their meaning . . . 11
Table 7. Format of ResultCode . . . 12
Table 8. Examples of ResultCode: Len pairs . . . 12
Table 9. List of ST25R95 commands . . . 13
Table 10. IDN command description . . . 14
Table 11. Protocol Select command description . . . 14
Table 12. List of <Parameters> values for the ProtocolSelect command for different protocols (Reader) . . . 15
Table 13. List of <Parameters> values for different protocols (card emulation) . . . 18
Table 14. Pollfield command description . . . 19
Table 15. SendRecv command description . . . 20
Table 16. List of <DATA> send values for the SendRecv command for different protocols . . . 21
Table 17. List of <Data> response values for the SendRecv command for different protocols . . . 23
Table 18. Structure of Parity byte . . . 24
Table 19. Listen command description . . . 25
Table 20. Response codes from the ST25R95 in Listening mode . . . 26
Table 21. Data format sent to the Host in Listening mode . . . 26
Table 22. Send command description . . . 27
Table 23. Format of data to be sent using Send command . . . 27
Table 24. Idle command description . . . 28
Table 25. Idle command structure . . . 29
Table 26. Summary of Idle command parameters . . . 29
Table 27. Ener, WU, and Leave Control resource configuration . . . 31
Table 28. RdReg command description . . . 34
Table 29. WrReg command description (Modulation index and receiver gain) . . . 35
Table 30. WrReg command description (Load modulation index and demodulator sensitivity) . . . 36
Table 31. Possible modulation index values . . . 37
Table 32. Possible receiver gain values . . . 37
Table 33. Possible load modulation index values . . . 38
Table 34. Possible demodulator sensitivity values . . . 38
Table 35. ARC_B default code for available reader protocols . . . 39
Table 36. ACC_A default code for available card emulation protocols . . . 39
Table 37. WrReg command description (Timer Window) . . . 39
Table 38. WrReg command description (AutoDetect Filter) . . . 40
Table 39. AC filter command description (Command <Len> > 0x02) . . . 41
Table 40. state when behaving as ISO/IEC 14443-A tag . . . 42
Table 41. Commands to which the device is able to react . . . 42
Table 42. Echo command description . . . 42
Table 43. Echo command in listen mode . . . 43
Table 44. Absolute maximum ratings . . . 44
Table 45. DC characteristics . . . 44
Table 46. Power consumption characteristics (VPS_Main from 2.7 to 3.3 V) . . . 45
Table 47. Power consumption characteristics (VPS_TX from 2.7 to 3.3 V) . . . 45
Table 48. Power consumption characteristics (VPS_TX from 4.5 to 5.5 V) . . . 45
Table 49. SPI interface characteristics . . . 46
Table 50. Tag/Card emulation characteristics . . . 47
Table 51. Field detection characteristics . . . 48
Table 52. Reader characteristics . . . 48

Table 53. HFO 27.12 MHz oscillator characteristics . . . 49
Table 54. VFQFPN - 32 pins, 5x5 mm, 0.5 mm pitch very thin profile fine pitch quad flat package mechanical data . . . 51
Table 55. Ordering information scheme . . . 53
Table 56. Wake-up source register . . . 54
Table 57. Wake-up event register . . . 54
Table 58. Document revision history . . . 55

List of figures

Figure 1. ST25R95 application overview . . . 2
Figure 2. ST25R95 block diagram . . . 2
Figure 3. ST25R95 pinout description . . . 4
Figure 4. ST25R95 initialization and operating state change . . . 7
Figure 5. Power-up sequence . . . 7
Figure 6. Sending command to ST25R95 . . . 9
Figure 7. Polling the ST25R95 until it is ready . . . 9
Figure 8. Reading data from ST25R95 . . . 10
Figure 9. Reset the ST25R95. . . . 10
Figure 10. Long frame format. . . . 12
Figure 11. Data transfer (in both command and response) when Parity Framing mode is enabled . . . 23
Figure 12. SPI timing diagram (Slave mode and CPOL = 0, CPHA = 0). . . . 46
Figure 13. SPI timing diagram (Slave mode and CPOL = 1, CPHA = 1). . . . 47
Figure 14. Typical application with a 27.12 MHz crystal . . . 49
Figure 15. VFQFPN - 32 pins, 5x5 mm, 0.5 mm pitch very thin profile fine pitch quad flat package outline . . . 50
Figure 16. VFQFPN - 32 pins, 5x5 mm, 0.5 mm pitch very thin profile fine pitch quad flat package recommended footprint 52

IMPORTANT NOTICE – PLEASE READ CAREFULLY

STMicroelectronics NV and its subsidiaries (“ST”) reserve the right to make changes, corrections, enhancements, modifications, and improvements to ST products and/or to this document at any time without notice. Purchasers should obtain the latest relevant information on ST products before placing orders. ST products are sold pursuant to ST’s terms and conditions of sale in place at the time of order acknowledgement.

Purchasers are solely responsible for the choice, selection, and use of ST products and ST assumes no liability for application assistance or the design of Purchasers’ products.

No license, express or implied, to any intellectual property right is granted by ST herein.

Resale of ST products with provisions different from the information set forth herein shall void any warranty granted by ST for such product.

ST and the ST logo are trademarks of ST. For additional information about ST trademarks, please refer to www.st.com/trademarks. All other product or service names are the property of their respective owners.

Information in this document supersedes and replaces information previously supplied in any prior versions of this document.

© 2019 STMicroelectronics – All rights reserved