ST1S06

Synchronous rectification with inhibit, 1.5A, 1.5 MHz fixed or adjustable, step-down switching regulator in DFN6 3x3

General features

- Step-down current mode PWM (1.5MHz) DC-DC converter
- 2% DC output voltage tolerance
- Synchronous rectification
- Inhibit function
- Internal soft start
- Typical efficiency:> 90%
- 1.5A Output current capability
- Not switching quiescent current: max 1.5mA over temperature range
- R_{DS} ON typ150mΩ
- Uses tiny capacitors and inductors
- Operative junction temp. -30°C to 125°C
- Available in DFN6 3x3 exposed pad

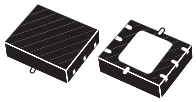

DFN6 (3x3mm)

Description

The ST1S06 is a step down DC-DC converter optimized for powering low-voltage digital core in HDD applications and, generally, to replace the high current linear solution when the power dissipation may cause an high heating of the application environment. It provides up to 1.5A over an input voltage range of 2.7V to 6V. An high switching frequency (1.5MHz) allows the use of tiny surface-mount components: as well as the resistor divider to set the output voltage value, only an inductor and two capacitors are required. Besides, a low output ripple is guaranteed by the current mode PWM topology and by the use of low E.S.R. SMD ceramic capacitors. The device is thermal protected and current limited to prevent damages due to accidental short circuit. The ST1S06 is available in DFN6 3x3 package.

Order code

Part number	Packaging	Package
ST1S06PM	ST1S06PMR	DFN6 (3x3 mm)
ST1S06PU	ST1S06PUR	DFN6D (3x3 mm)
ST1S06APM	ST1S06APMR	DFN6 (3x3 mm)
ST1S06PM12	ST1S06PM12R	DFN6 (3x3 mm)
ST1S06PM33	ST1S06PM33R	DFN6 (3x3 mm)
ST1S06APU	ST1S06APUR	DFN6D (3x3 mm)
ST1S06PU12	ST1S06PU12R	DFN6D (3x3 mm)
ST1S06PU33	ST1S06PU33R	DFN6D (3x3 mm)

Contents

1 Diagram 3

2 Pin configuration 4

3 Maximum ratings 5

4 Electrical characteristics 6

5 Typical performance characteristics 9

6 Typical application 13

7 Package mechanical data 14

8 Revision history 18

1 Diagram

Figure 1. Schematic diagram

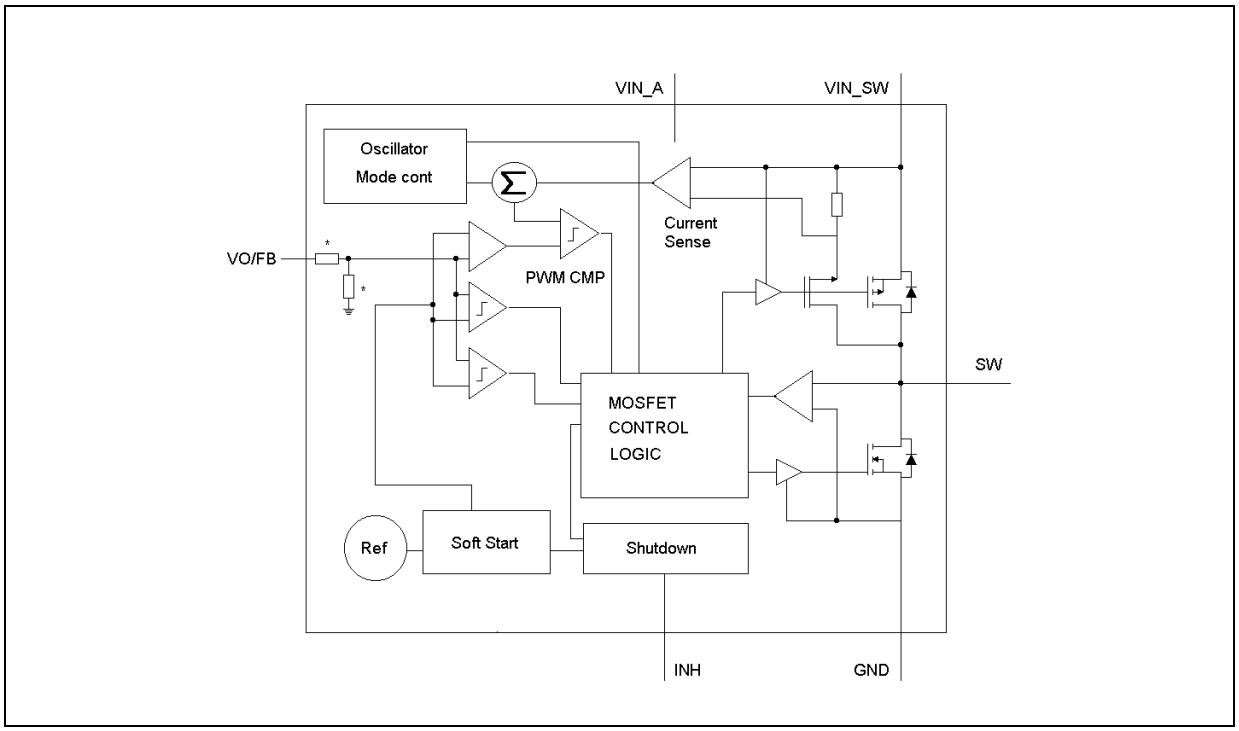

2 Pin configuration

Figure 2. Pin configuration (top view)

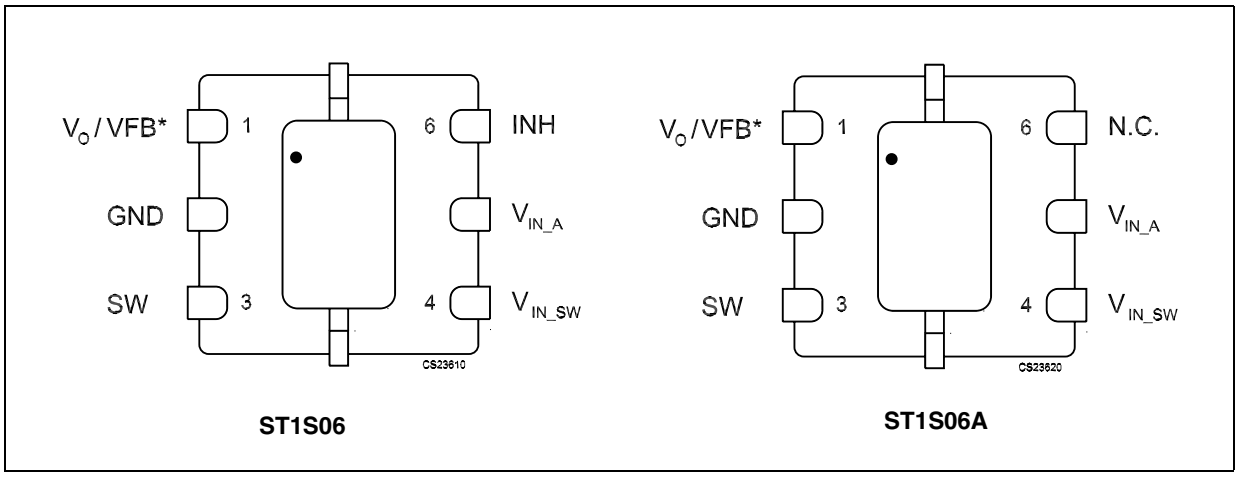

*Note: * Pin 1 is V_{FB} for ADJ version and V_O for Fixed version*

Table 1. Pin description

Pln n°	Symbol	Note
1	FB/V_O	Feedback voltage / output voltage
2	GND	System ground
3	SW	Switching pin
4	V_{IN_SW}	Power supply for the mosfet switch
5	V_{IN_A}	Power supply for analogic circuit
6	V_{INH}	Inhibit pin to turn off the device
		Exposed pad to be connected to GND

3 Maximum ratings

Table 2. Absolute maximum ratings

Symbol	Parameter	Value	Unit
V_{IN_SW}	Positive power supply voltage	-0.3 to 7	V
V_{IN_A}	Positive power supply voltage	-0.3 to 7	V
V_{INH}	Inhibit voltage	-0.3 to V_I + 0.3	V
SWITCH Voltage	Max. voltage of output pin	-0.3 to 7	V
V_{FB}/V_O	Feedback voltage	-0.3 to 3	V
V_O	Output voltage (for V_O > 1.6V)	-0.3 to 6	V
T_J	Max junction temperature	-40 to 150	°C
T_{STG}	Storage temperature range	-65 to 150	°C
T_{LEAD}	Lead temperature (soldering) 10 sec	260	°C

Note: Absolute Maximum Ratings are those values beyond which damage to the device may occur. Functional Operation under these conditions is not implied.

Table 3. Thermal data

Symbol	Parameter	Value	Unit
R_{thJA}	Thermal resistance junction-ambient	55	°C/W
R_{thJC}	Thermal resistance junction-case	10	°C/W

4 Electrical characteristics

Table 4. Electrical characteristics for ST1S06

(V_{IN_SW} =V_{IN_A} =V_{INH} =5V, V_O=1.2V, C_I =4.7µF, C_O =22µF, L1 =3.3µH, T_J =-30 to 125°C (unless otherwise specified. Typical values are referred to T_J = 25°C)

Symbol	Parameter	Test conditions	Min.	Typ.	Max.	Unit
FB	Feedback voltage		784	800	816	mV
I_{FB}	V_{FB} pin bias current				600	nA
V_I	Minimum input voltage	I_O= 10mA to 1.5A	2.7			V
I_Q	Quiescent current	V_{INH} > 1.2V			1.5	mA
		V_{INH} < 0.4V, T_J = -30°C to 85°C			1	µA
I_O	Output current	V_I = 2.7 to 5.5V *Note: 1*	1.5			A
V_{INH}	Inhibit threshold	Device ON, V_I = 2.7 to 5.5V	1.3			V
		Device ON, V_I = 2.7 to 5V	1.2			
		Device OFF			0.4	
I_{INH}	Inhibit pin current				2	µA
$\%V_O/\Delta V_I$	Reference line regulation	V_I = 2.7V to 5.5V *Note: 1*		0.2	0.3	$\%V_O/\Delta V_I$
$\%V_O/\Delta I_O$	Reference load regulation	I_O = 10mA to 1.5A *Note: 1*		0.2	0.3	$\%V_O/\Delta I_O$
$PWMf_S$	PWM Switching frequency	V_{FB} = 0.8V	1.2	1.5	1.8	MHz
D_{MAX}	Maximum duty cycle		80	87		%
R_{DSON}-N	NMOS Switch on resistance	I_{SW} = 750 mA		0.12		Ω
R_{DSON}-P	PMOS Switch on resistance	I_{SW} = 750 mA		0.15		Ω
I_{SWL}	Switching current limitation	*Note: 1*		2.3		A
ν	Efficiency *Note: 1*	I_O = 10mA to 100mA, V_O = 3.3V	65			%
		I_O = 100mA to 1.5A, V_O = 3.3V	85	90		
T_{SHDN}	Thermal shutdown		130	150		°C
T_{HYS}	Thermal shutdown hysteresis			15		°C
$\%V_O/\Delta I_O$	Load transient response	I_O = 100mA to 750mA, T_J = 25°C t_R = t_F ≥ 200ns, *Note: 1*	-5		+5	$\%V_O$
$\%V_O/\Delta I_O$	Short circuit removal response	I_O = 10mA to I_O=short, T_J = 25°C *Note: 1*	-10		+10	$\%V_O$

Note: 1 Guaranteed by design, but not tested in production

Table 5. Electrical characteristics for ST1S06PM12

(V_{IN_SW} =V_{IN_A} =V_{INH} =5V, V_O=1.2V, C_I =4.7µF, C_O =22µF, L1 =3.3µH, T_J =-30 to 125°C unless otherwise specified. Typical values are referred to T_J =25°C)

Symbol	Parameter	Test conditions	Min.	Typ.	Max.	Unit
OUT	Output feedback pin		1.176	1.2	1.224	V
I_O	I_O Pin bias current	V_O = 1.5V		15	20	µA
V_I	Minimum input voltage	I_O= 10mA to 1.5A	2.7			V
I_Q	Quiescent current	V_{INH} > 1.2V			1.5	mA
		V_{INH} < 0.4V, T_J = -30°C to 85°C			1	µA
I_O	Output current	V_I = 2.7 to 5.5V *Note: 1*	1.5			A
V_{INH}	Inhibit threshold	Device ON, V_I = 2.7 to 5.5V	1.3			V
		Device ON, V_I = 2.7 to 5V	1.2			
		Device OFF			0.4	
I_{INH}	Inhibit pin current				2	µA
$\%V_O/\Delta V_I$	Reference line regulation	V_I = 2.7V to 5.5V *Note: 1*		0.2	0.3	$\%V_O/\Delta V_I$
$\%V_O/\Delta I_O$	Reference load regulation	I_O = 10mA to 1.5A *Note: 1*		0.2	0.3	$\%V_O/\Delta I_O$
PWMf_S	PWM Switching frequency	V_{FB} = 0.8V	1.2	1.5	1.8	MHz
D_{MAX}	Maximum duty cycle		80	87		%
R_{DSON}-N	NMOS Switch on resistance	I_{SW} = 750 mA		0.12		Ω
R_{DSON}-P	PMOS Switch on resistance	I_{SW} = 750 mA		0.15		Ω
I_{SWL}	Switching current limitation	*Note: 1*		2.3		A
ν	Efficiency *Note: 1*	I_O = 10mA to 100mA, V_O = 1.2V	60			%
		I_O = 100mA to 1.5A, V_O = 1.2V	80	85		
T_{SHDN}	Thermal shutdown		130	150		°C
T_{HYS}	Thermal shutdown hysteresis			15		°C
$\%V_O/\Delta I_O$	Load transient response	I_O = 100mA to 750mA, T_J = 25°C t_R = t_F ≥ 200ns, *Note: 1*	-5		+5	$\%V_O$
$\%V_O/\Delta I_O$	Short circuit removal response	I_O = 10mA to I_O=short, T_J = 25°C *Note: 1*	-10		+10	$\%V_O$

Note: 1 Guaranteed by design, but not tested in production

Table 6. Electrical characteristics for ST1S06PM33

(V_{IN_SW} =V_{IN_A} =V_{INH} =5V, V_O=3.3V, C_I =4.7µF, C_O =22µF, L1 =3.3µH, T_J =-30 to 125°C unless otherwise specified. Typical values are referred to T_J =25°C)

Symbol	Parameter	Test conditions	Min.	Typ.	Max.	Unit
OUT	Output feedback pin		3.23	3.3	3.37	V
I_O	I_O Pin bias current	V_O = 3.5V		15	20	µA
V_I	Minimum input voltage	I_O= 10mA to 1.5A	4.2			V
I_Q	Quiescent current	V_{INH} > 1.2V			1.5	mA
		V_{INH} < 0.4V, T_J = -30°C to 85°C			1	µA
I_O	Output current	V_I = 4.2 to 5.5V *Note: 1*	1.5			A
V_{INH}	Inhibit threshold	Device ON, V_I = 4.2 to 5.5V	1.3			V
		Device ON, V_I = 4.2 to 5V	1.2			
		Device OFF			0.4	
I_{INH}	Inhibit pin current				2	µA
$\%V_O/\Delta V_I$	Reference line regulation	V_I = 4.2V to 5.5V *Note: 1*		0.2	0.3	$\%V_O/\Delta V_I$
$\%V_O/\Delta I_O$	Reference load regulation	I_O = 10mA to 1.5A *Note: 1*		0.2	0.3	$\%V_O/\Delta I_O$
$PWMf_S$	PWM Switching frequency	V_{FB} = 0.8V	1.2	1.5	1.8	MHz
D_{MAX}	Maximum duty cycle		80	87		%
R_{DSON}-N	NMOS Switch on resistance	I_{SW} = 750 mA		0.12		Ω
R_{DSON}-P	PMOS Switch on resistance	I_{SW} = 750 mA		0.15		Ω
I_{SWL}	Switching current limitation	*Note: 1*		2.3		A
ν	Efficiency *Note: 1*	I_O = 10mA to 100mA, V_O = 3.3V	65			%
		I_O = 100mA to 1.5A, V_O = 3.3V	85	90		
T_{SHDN}	Thermal shutdown		130	150		°C
T_{HYS}	Thermal shutdown hysteresis			15		°C
$\%V_O/\Delta I_O$	Load transient response	I_O = 100mA to 750mA, T_J = 25°C t_R = t_F ≥ 200ns, *Note: 1*	-5		+5	$\%V_O$
$\%V_O/\Delta I_O$	Short circuit removal response	I_O = 10mA to I_O=short, T_J = 25°C *Note: 1*	-10		+10	$\%V_O$

Note: 1 Guaranteed by design, but not tested in production

5 Typical performance characteristics

(V_{IN_SW} =V_{IN_A} =V_{INH} =5V, C_I = 4.7µF, C_O = 22µF, L1 =3.3µH, unless otherwise specified. Typical values are referred to 25°C)

Figure 3. Efficiency vs output current

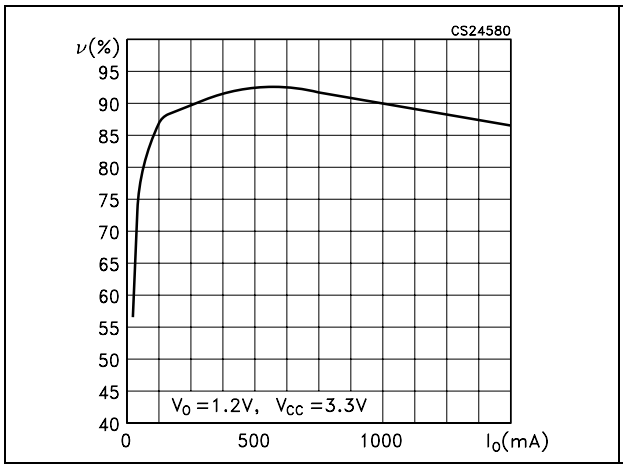

Figure 4. Efficiency vs output current

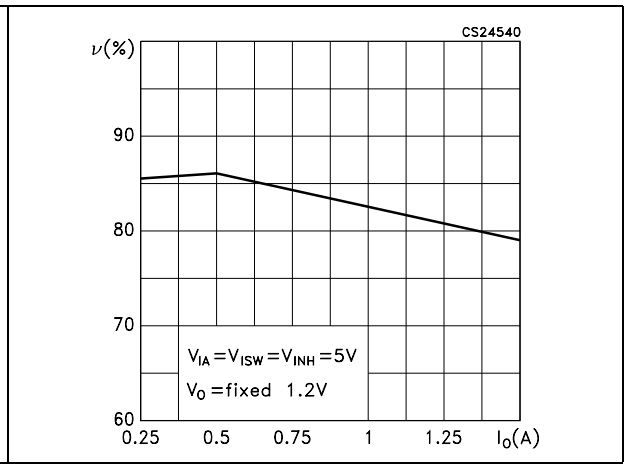

Figure 5. Efficiency vs output current

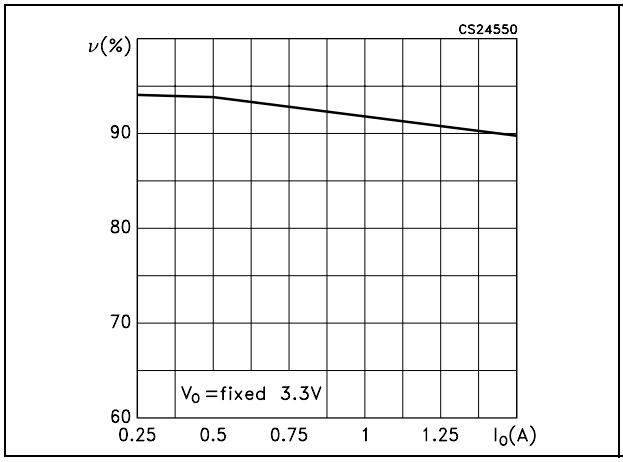

Figure 6. Efficiency vs output current

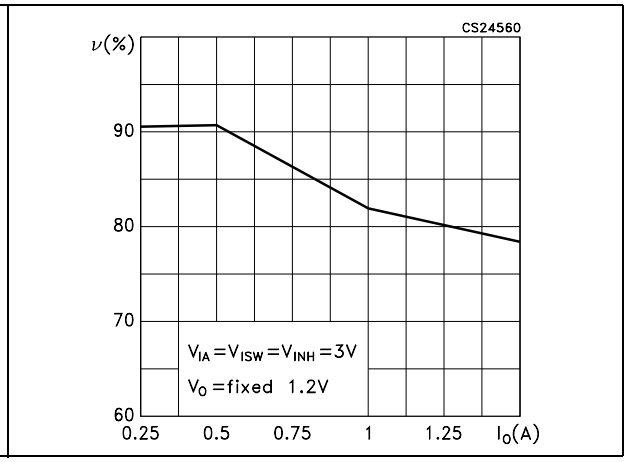

Figure 7. Efficiency vs output current

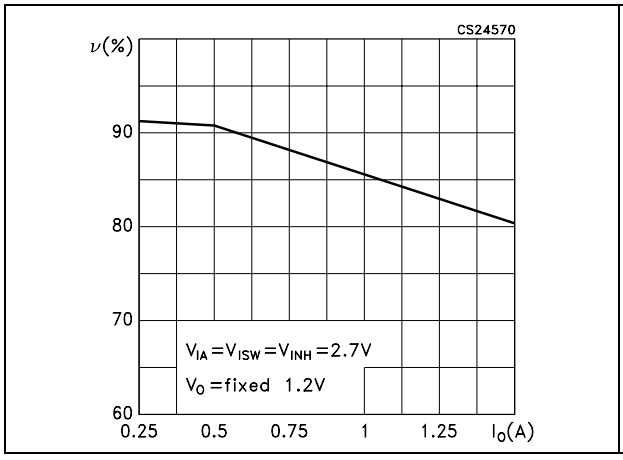

Figure 8. Efficiency vs inductor

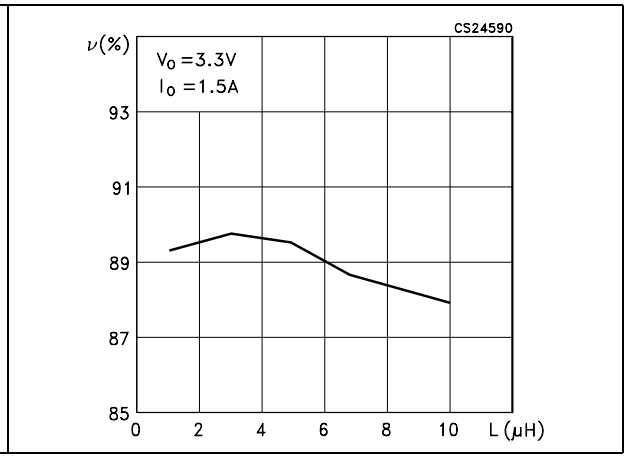

Figure 9. Voltage feedback vs temperature

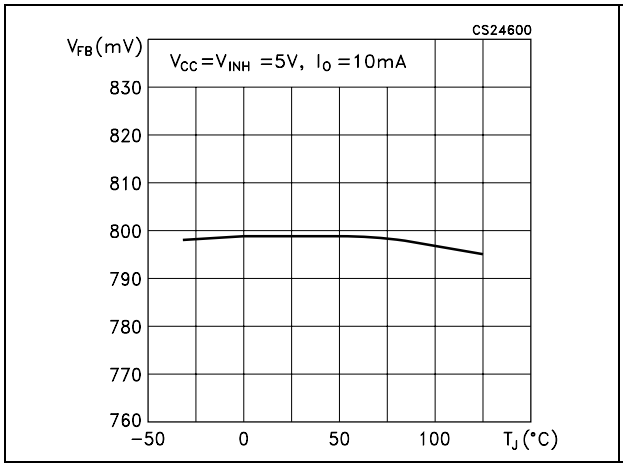

Figure 10. Input voltage vs output voltage

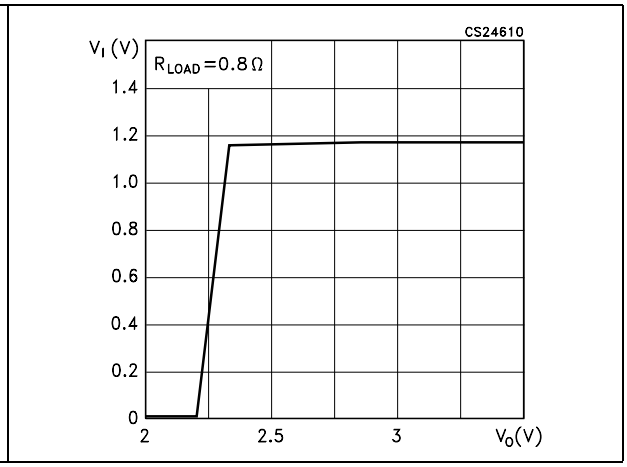

Figure 11. Feedback pin bias current vs temperature

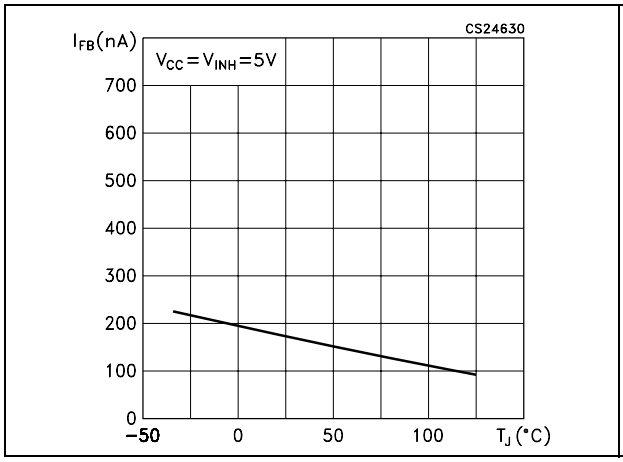

Figure 12. Quiescent current vs temperature

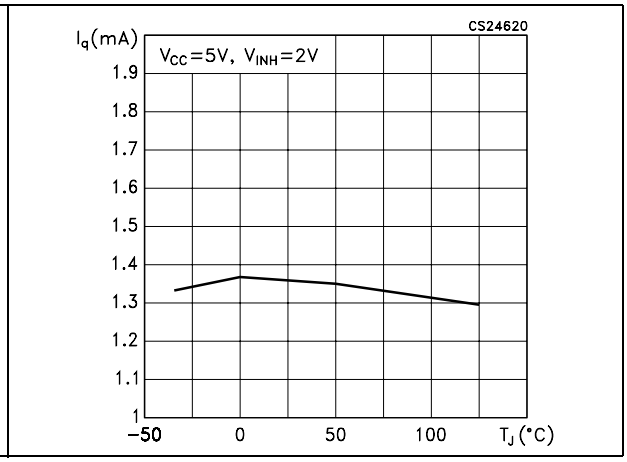

Figure 13. Quiescent current vs temperature

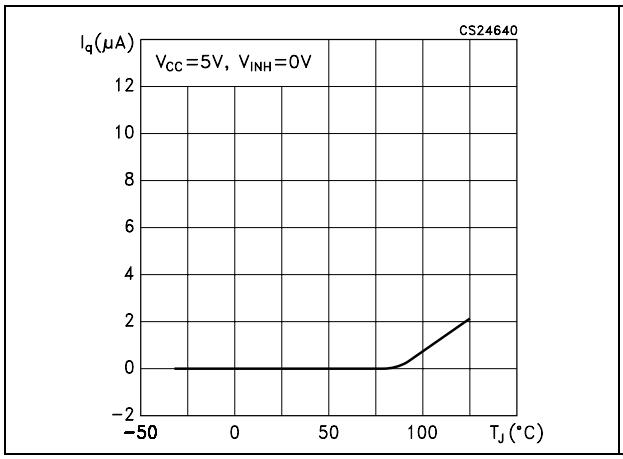

Figure 14. Inhibit voltage vs input voltage

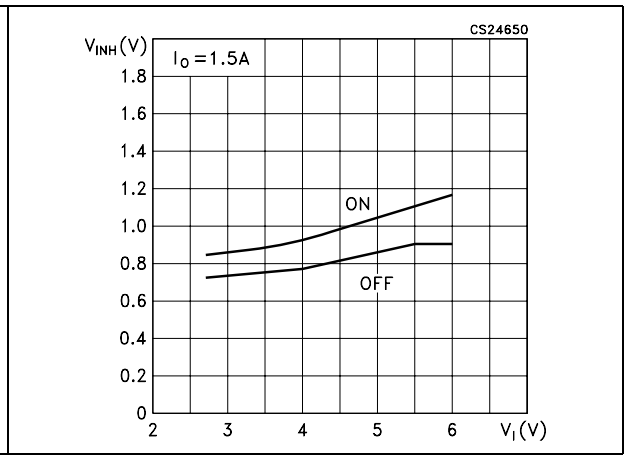

Figure 15. Inhibit voltage vs temperature

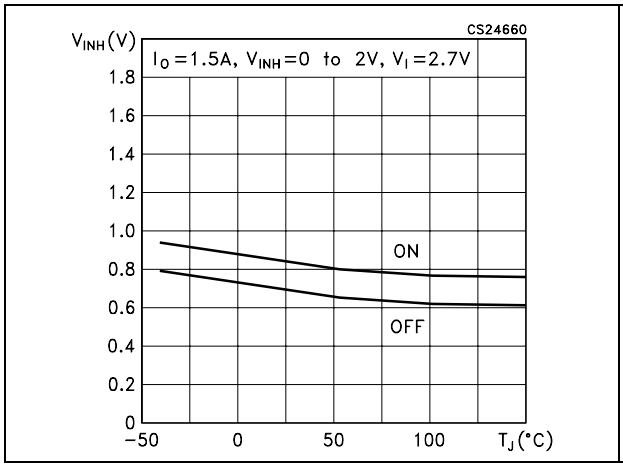

Figure 16. Inhibit voltage vs temperature

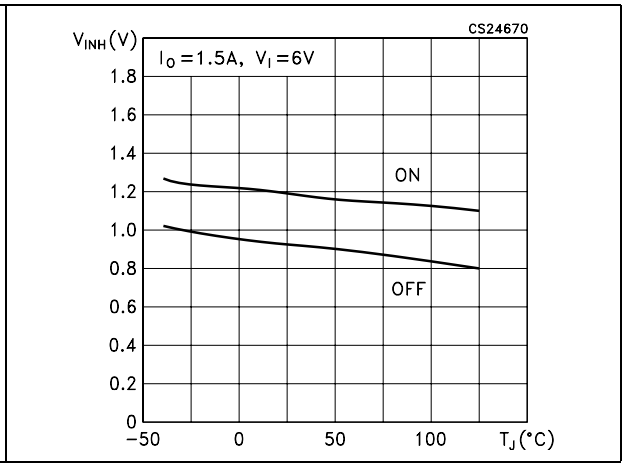

Figure 17. Line regulation vs temperature

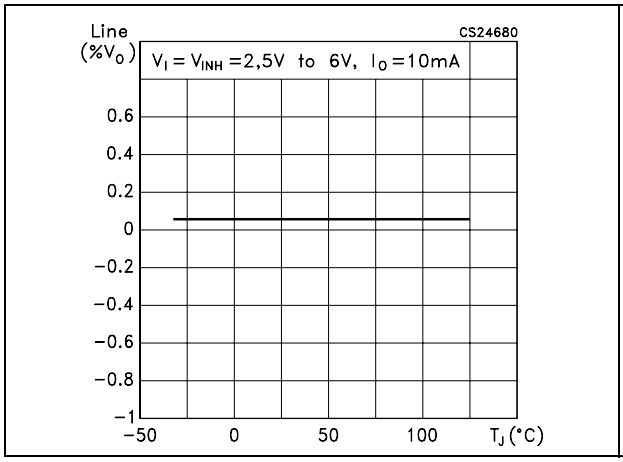

Figure 18. Load regulation vs temperature

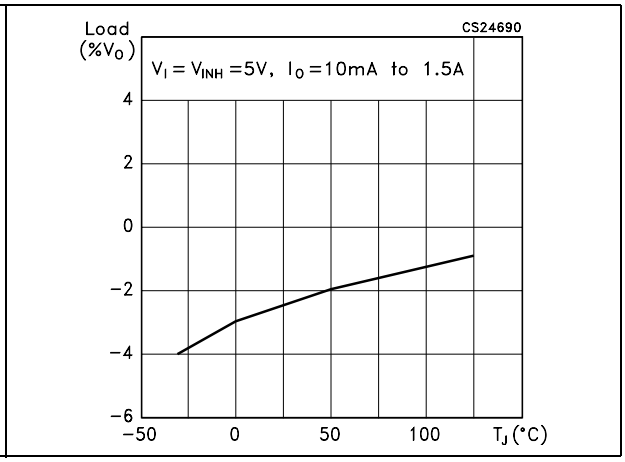

Figure 19. PWM Switching Frequency vs temperature

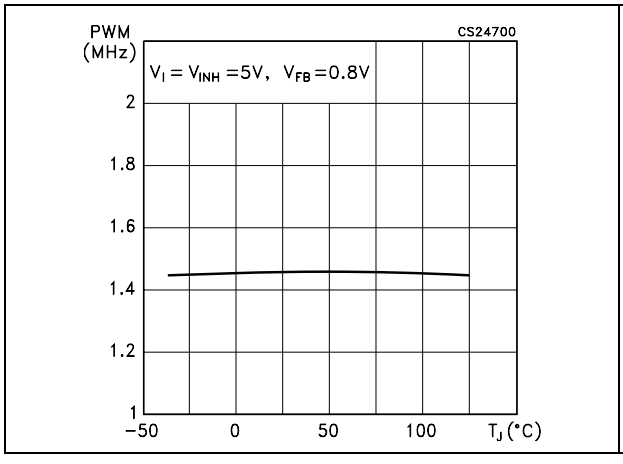

Figure 20. NMOS Switch on resistance vs temperature

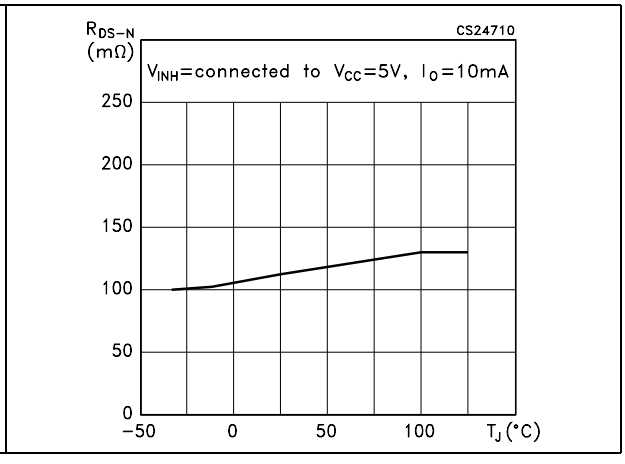

Figure 21. PMOS Switch on resistance vs temperature

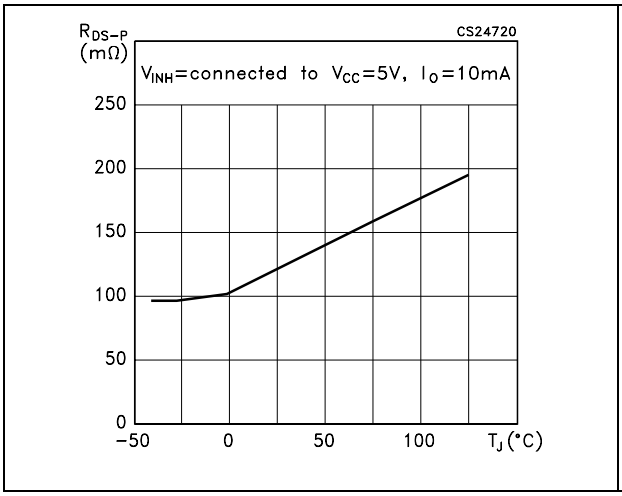

Figure 22. Inhibit transient

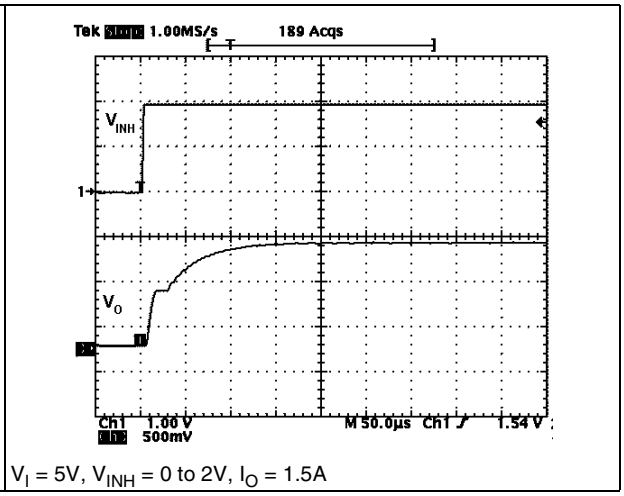

V_I = 5V, V_{INH} = 0 to 2V, I_O = 1.5A

Figure 23. Inhibit transient

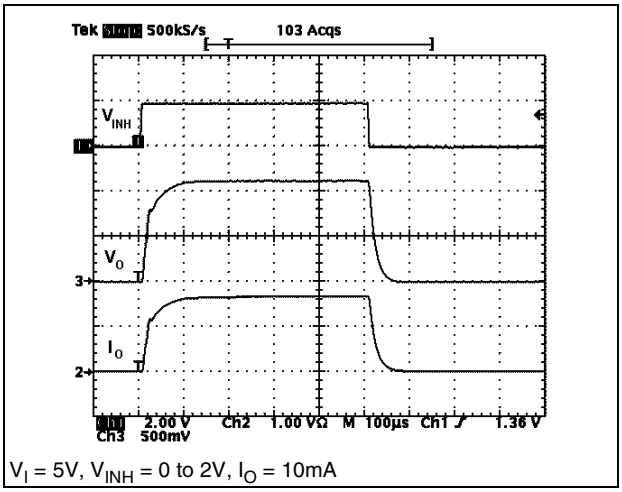

V_I = 5V, V_{INH} = 0 to 2V, I_O = 10mA

6 Typical application

Figure 24. Application circuit

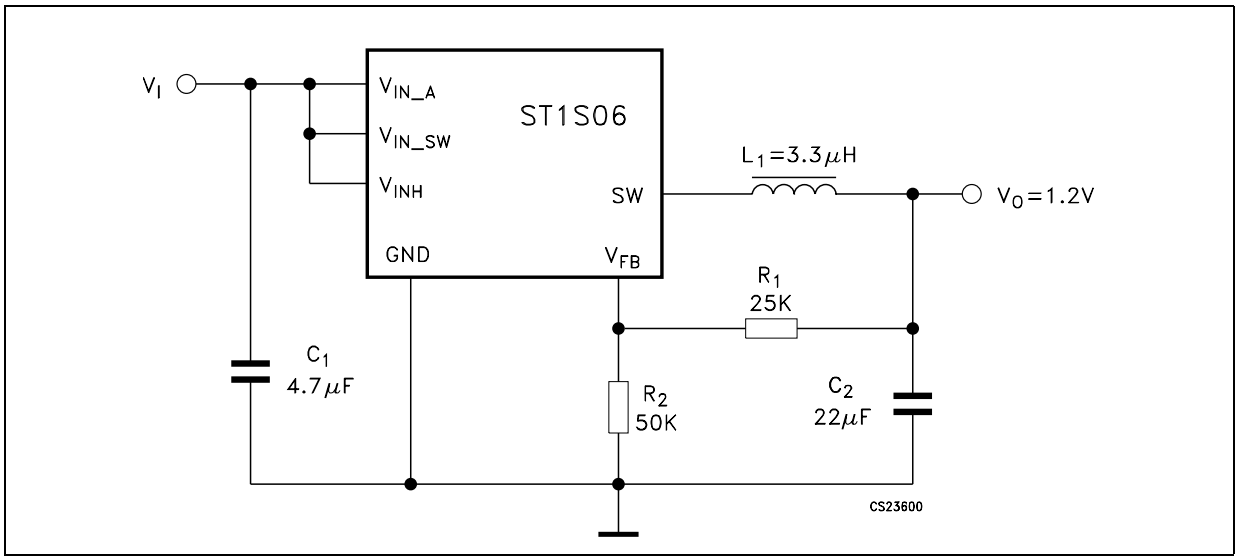

Application notes

The ST1S06 is an adjustable current mode PWM step-down DC/DC converter with internal 1.5A power switch, packaged in a 6-lead DFN 3x3.

It's a complete 1.5A switching regulator with its internal compensation eliminating additional component.

The constant frequency, current mode, PWM architecture and stable operation with ceramic capacitors results in low, predictable output ripple. However, in order to maximize the power conversion efficiency with light load, the regulator reduces automatically the switching frequency when the output load becomes less than 250mA typically.

To clamp the error amplifier reference voltage a Soft Start control block generating a voltage ramp, has been implemented. Besides an On-Chip Power on Reset of 50=100µs ensure the proper operation when switching on the power supply. Other circuits fitted to the device protection are the Thermal Shut down block which turn off the regulator when the junction temperature exceeds 150°C typically and the Cycle-by-cycle Current Limiting that provides protection against shorted outputs.

Being the ST1S06 an adjustable regulator, the output voltage is determined by an external resistor divider. The desired value is given by the following equation:

$V_O = V_{FB}[1+R1/R2]$

To make the device working, only few component are required: an inductor and two capacitors and the resistor divider. The chosen inductor must be able to not saturate at the peak current level. Besides, its value can be selected keeping in account that a large inductor value increases the efficiency at low output current and reduces output voltage ripple, while a smaller inductor can be chosen when it is important to reduce the package size and the total cost of the application. Finally, the ST1S06 has been designed to work properly with X5R or X7R SMD ceramic capacitors both at the input and at the output. this kind of capacitors, thanks to their very low series resistance (ESR), minimize the output voltage ripple. Other low ESR capacitors can be used according to the need of the application without invalidate the right functioning of the device.

7 Package mechanical data

In order to meet environmental requirements, ST offers these devices in ECOPACK® packages. These packages have a Lead-free second level interconnect. The category of second Level Interconnect is marked on the package and on the inner box label, in compliance with JEDEC Standard JESD97. The maximum ratings related to soldering conditions are also marked on the inner box label. ECOPACK is an ST trademark. ECOPACK specifications are available at: www.st.com.

DFN6 (3x3) MECHANICAL DATA

DIM.	mm.			inch.		
	MIN.	TYP	MAX.	MIN.	TYP.	MAX.
A	0.80		1.00	0.031		0.039
A1	0		0.05	0.0		0.02
A2	0.65		0.75	0.026		0.030
A3		0.20			0.08	
b	0.33		0.43	0.013		0.017
D	2.90	3.00	3.10	0.114	0.118	0.122
D2	1.92		2.12	0.076		0.083
E	2.90	3.00	3.10	0.114	0.118	0.122
E2	1.11		1.31	0.044		0.052
e		0.95			0.037	
L	0.20		0.45	0.008		0.018
L1		0.24			0.009	
L2			0.13			0.005
K	0.20			0.008		

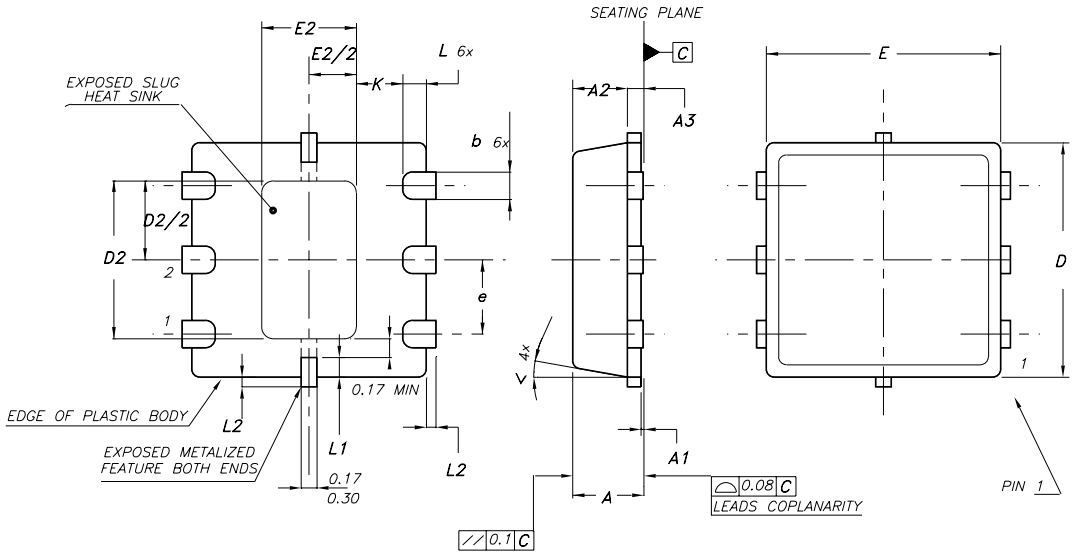

7387339A

DFN6D (3x3) MECHANICAL DATA

DIM.	mm.			inch		
	MIN.	TYP	MAX.	MIN.	TYP.	MAX.
A	0.80		1.00	0.031		0.039
A1	0	0.02	0.05	0	0.001	0.002
A3		0.20			0.008	
b	0.23		0.45	0.009		0.018
D	2.90	3.00	3.10	0.114	0.118	0.122
D2	2.23		2.50	0.088		0.098
E	2.90	3.00	3.10	0.114	0.118	0.122
E2	1.50		1.75	0.059		0.069
e		0.95			0.037	
L	0.30	0.40	0.50	0.012	0.016	0.020

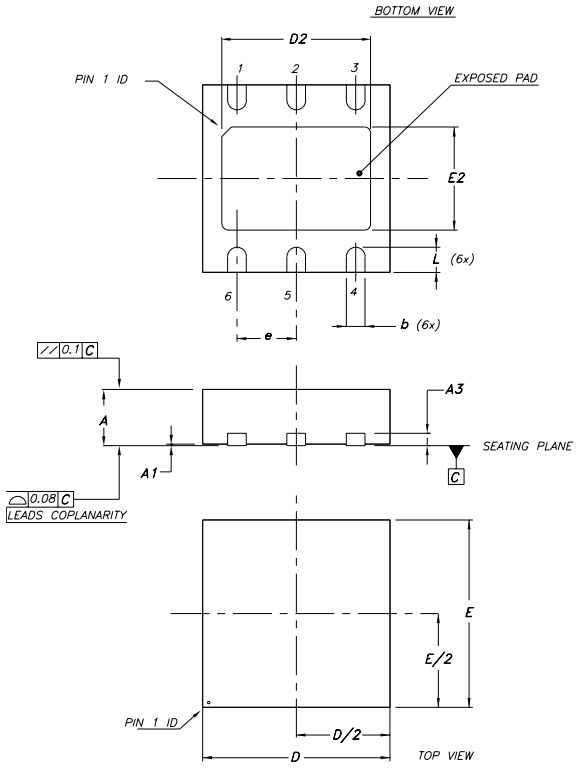

7946637B

Tape & Reel QFNxx/DFNxx (3x3) MECHANICAL DATA

DIM.	mm.			inch		
	MIN.	TYP	MAX.	MIN.	TYP.	MAX.
A			330			12.992
C	12.8		13.2	0.504		0.519
D	20.2			0.795		
N	60			2.362		
T			18.4			0.724
Ao		3.3			0.130	
Bo		3.3			0.130	
Ko		1.1			0.043	
Po		4			0.157	
P		8			0.315	

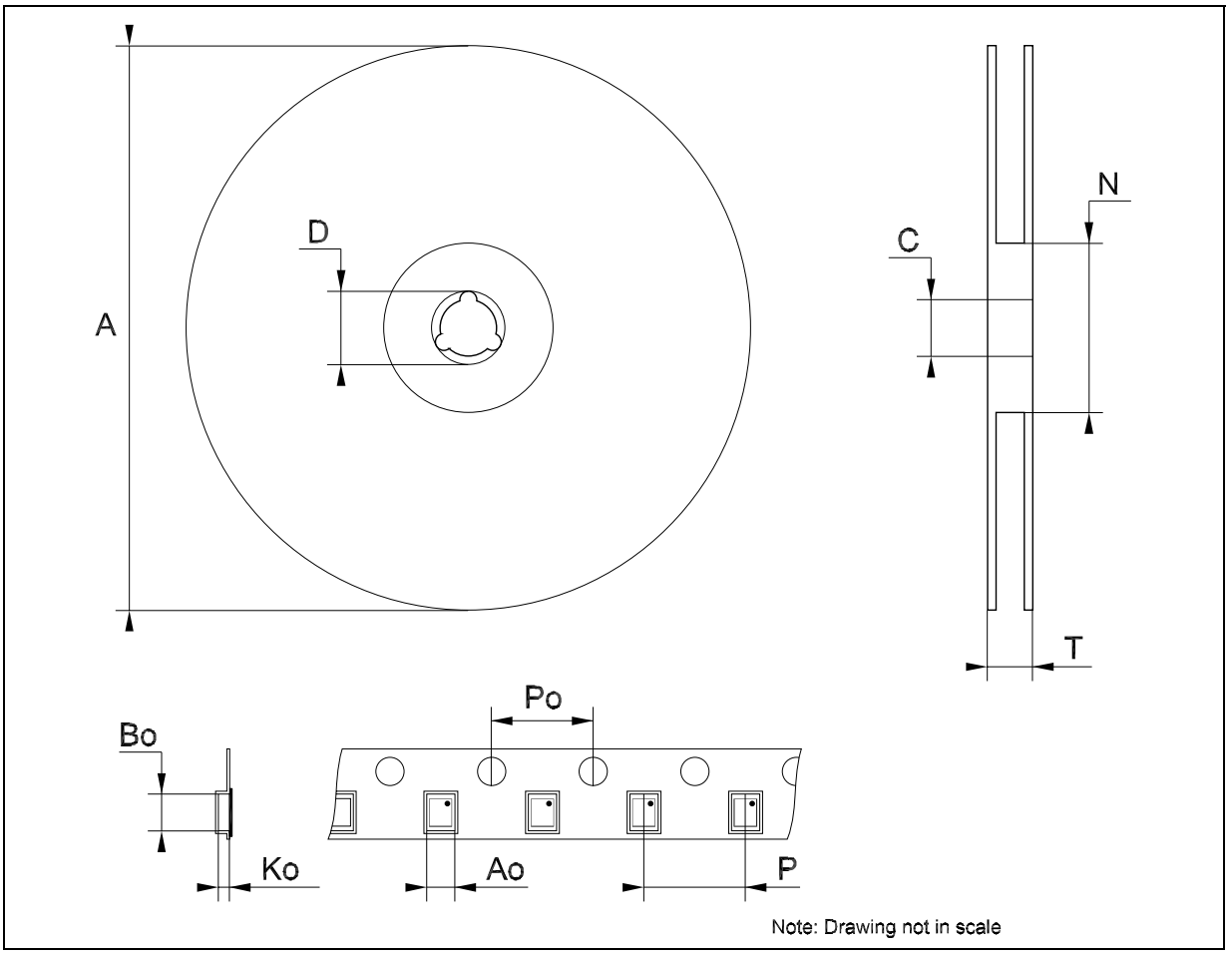

Note: Drawing not in scale

8 Revision history

Table 7. Revision history

Date	Revision	Changes
08-May-2006	1	Initial release.
06-Jun-2006	2	*Table 2.* has been updated.
16-Oct-2006	3	Add new mechanical data DFN6D.
09-Nov-2006	4	Mechanical data information for DFN6 has been update.
03-Apr-2007	5	Tape & Reel has been updated.

Please Read Carefully:

Information in this document is provided solely in connection with ST products. STMicroelectronics NV and its subsidiaries (“ST”) reserve the right to make changes, corrections, modifications or improvements, to this document, and the products and services described herein at any time, without notice.

All ST products are sold pursuant to ST’s terms and conditions of sale.

Purchasers are solely responsible for the choice, selection and use of the ST products and services described herein, and ST assumes no liability whatsoever relating to the choice, selection or use of the ST products and services described herein.

No license, express or implied, by estoppel or otherwise, to any intellectual property rights is granted under this document. If any part of this document refers to any third party products or services it shall not be deemed a license grant by ST for the use of such third party products or services, or any intellectual property contained therein or considered as a warranty covering the use in any manner whatsoever of such third party products or services or any intellectual property contained therein.

UNLESS OTHERWISE SET FORTH IN ST’S TERMS AND CONDITIONS OF SALE ST DISCLAIMS ANY EXPRESS OR IMPLIED WARRANTY WITH RESPECT TO THE USE AND/OR SALE OF ST PRODUCTS INCLUDING WITHOUT LIMITATION IMPLIED WARRANTIES OF MERCHANTABILITY, FITNESS FOR A PARTICULAR PURPOSE (AND THEIR EQUIVALENTS UNDER THE LAWS OF ANY JURISDICTION), OR INFRINGEMENT OF ANY PATENT, COPYRIGHT OR OTHER INTELLECTUAL PROPERTY RIGHT.

UNLESS EXPRESSLY APPROVED IN WRITING BY AN AUTHORIZED ST REPRESENTATIVE, ST PRODUCTS ARE NOT RECOMMENDED, AUTHORIZED OR WARRANTED FOR USE IN MILITARY, AIR CRAFT, SPACE, LIFE SAVING, OR LIFE SUSTAINING APPLICATIONS, NOR IN PRODUCTS OR SYSTEMS WHERE FAILURE OR MALFUNCTION MAY RESULT IN PERSONAL INJURY, DEATH, OR SEVERE PROPERTY OR ENVIRONMENTAL DAMAGE. ST PRODUCTS WHICH ARE NOT SPECIFIED AS "AUTOMOTIVE GRADE" MAY ONLY BE USED IN AUTOMOTIVE APPLICATIONS AT USER’S OWN RISK.

Resale of ST products with provisions different from the statements and/or technical features set forth in this document shall immediately void any warranty granted by ST for the ST product or service described herein and shall not create or extend in any manner whatsoever, any liability of ST.

ST and the ST logo are trademarks or registered trademarks of ST in various countries.

Information in this document supersedes and replaces all information previously supplied.

The ST logo is a registered trademark of STMicroelectronics. All other names are the property of their respective owners.

© 2007 STMicroelectronics - All rights reserved

STMicroelectronics group of companies

Australia - Belgium - Brazil - Canada - China - Czech Republic - Finland - France - Germany - Hong Kong - India - Israel - Italy - Japan - Malaysia - Malta - Morocco - Singapore - Spain - Sweden - Switzerland - United Kingdom - United States of America

www.st.com