Split/Tran™ ,Specialty Purpose & Class 2 Transformers • Printed Circuit Mount

BUY DIRECT 24 HOUR PRONTO SHIPMENT
TEL: (516) 239-5777
FAX: (516) 239-7208

Split Bobbin with High Isolation

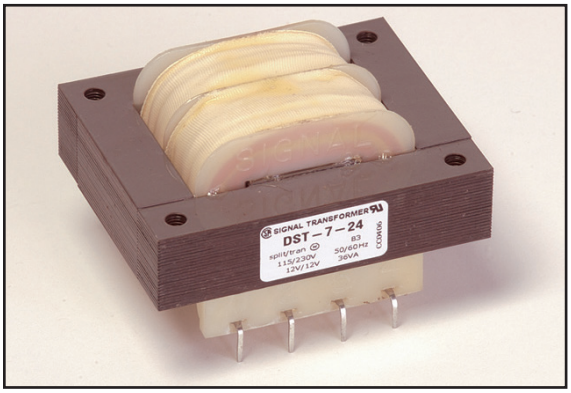

Signal's ST and DST transformers use a split bobbin that provides superior isolation and low capacitive coupling.

General Specifications

- Power - 1.1 VA to 36 VA
- Dielectric Strength - 2500 Vrms Hipot
- Primaries - Single or dual primaries, 115 V or 115/230 V, 50/60 Hz
- Secondaries - Series or parallel
- Electrostatic Shield - Not necessay, split bobbin construction
- Insulation System - Class B, 130° C
- Mounting Hardware - see chart

Agency Certifications

- UL 1446 Class B insulation systems, File # E66312
- UL Recognized 506 / UL 5085-1, 2, File # E63829
- CSA certified to C22.2 #66.1, File # 221070
- cCSAus certified to C22.2 #66.3 / UL 5085-3, File #221070
- Class 2 – marked with (*) or (**) or (#)
  **CSA certified as Inherently Limited
  * CSA certified as Non Inherently Limited – see recommended fuse rating on next page
  # UL Recognized UL5083-3, Inherently Limited File # E116583

Part Number		Secondary RMS Rating	
Single 115V 6 Pin	Dual 115/230V 8 Pin	Series	Parallel
ST-2-10**	DST-2-10**	10VCT @ 0.11A	5V @ 0.22A
ST-3-10*	DST-3-10*	10VCT @ 0.25A (5)	5V @ 0.5A (9)
ST-4-10*	DST-4-10*	10VCT @ 0.6A (9)	5V @ 1.2A (11)
ST-5-10*	DST-5-10*	10VCT @ 1.2A (11)	5V @ 2.4A (12)
ST-6-10	DST-6-10	10VCT @ 2.0A	5V @ 4.0A
ST-7-10	DST-7-10	10VCT @ 3.6A	5V @ 7.2A
ST-2-12**	DST-2-12**	12.6VCT @ 0.09A	6.3V @ 0.18A
ST-3-12*	DST-3-12*	12.6VCT @ 0.2A (4)	6.3V @ 0.4A (8)
ST-4-12*	DST-4-12*	12.6VCT @ 0.5A (9)	6.3V @ 1.0A (11)
ST-5-12*	DST-5-12*	12.6VCT @ 1.0A (11)	6.3V @ 2.0A (13)
ST-6-12	DST-6-12	12.6VCT @ 1.6A	6.3V @ 3.2A
ST-7-12	DST-7-12	12.6VCT @ 2.85A	6.3V @ 5.7A
ST-2-16**	DST-2-16**	16VCT @ 0.07A	8V @ 0.14A
ST-3-16*	DST-3-16*	16VCT @ 0.15A (3)	8V @ 0.3A (6)
ST-4-16*	DST-4-16*#	16VCT @ 0.4A (7)	8V @ 0.8A (10)
ST-5-16*	DST-5-16*	16VCT @ 0.8A (10)	8V @ 1.6A (11)
ST-6-16	DST-6-16	16VCT @ 1.25A	8V @ 2.5A
ST-7-16	DST-7-16	16VCT @ 2.25A	8V @ 4.5A
ST-2-20**	DST-2-20**	20VCT @ 0.055A	10V @ 0.11A
ST-3-20*	DST-3-20*	20VCT @ 0.12A (2)	10V @ 0.24A (5)
ST-4-20*	DST-4-20*	20VCT @ 0.3A (6)	10V @ 0.6A (9)
ST-5-20*	DST-5-20*	20VCT @ 0.6A (9)	10V @ 1.2A (11)
ST-6-20	DST-6-20	20VCT @ 1.0A	10V @ 2.0A
ST-7-20	DST-7-20	20VCT @ 1.8A	10V @ 3.6A
ST-2-24**	DST-2-24**	24VCT @ 0.045A	12V @ 0.09A
ST-3-24*	DST-3-24*	24VCT @ 0.1A (1)	12V @ 0.2A (4)
ST-4-24*	DST-4-24*#	24VCT @ 0.25A (5)	12V @ 0.5A (9)
ST-5-24*	DST-5-24*#	24VCT @ 0.5A (9)	12V @ 1.0A (11)
ST-6-24	DST-6-24	24VCT @ 0.8A	12V @ 1.6A
ST-7-24	DST-7-24	24VCT @ 1.5A	12V @ 3.0A

Part Number		Secondary RMS Rating	
Single 115V 6 Pin	Dual 115/230V 8 Pin	Series	Parallel
ST-2-28	DST-2-28	28VCT @ 0.04A	14V @ 0.08A
ST-3-28	DST-3-28	28VCT @ 0.085A	14V @ 0.17A
ST-4-28	DST-4-28	28VCT @ 0.2A	14V @ 0.4A
ST-5-28	DST-5-28	28VCT @ 0.42A	14V @ 0.84A
ST-6-28	DST-6-28	28VCT @ 0.7A	14V @ 1.4A
ST-7-28	DST-7-28	28VCT @ 1.3A	14V @ 2.6A
ST-2-36	DST-2-36	36VCT @ 0.03A	18V @ 0.06A
ST-3-36	DST-3-36	36VCT @ 0.065A	18V @ 0.13A
ST-4-36	DST-4-36	36VCT @ 0.17A	18V @ 0.34A
ST-5-36	DST-5-36	36VCT @ 0.35A	18V @ 0.7A
ST-6-36	DST-6-36	36VCT @ 0.55A	18V @ 1.1A
ST-7-36	DST-7-36	36VCT @ 1.0A	18V @ 2.0A
ST-2-48	DST-2-48	48VCT @ 0.023A	24V @ 0.046A
ST-3-48	DST-3-48	48VCT @ 0.05A	24V @ 0.1A
ST-4-48	DST-4-48	48VCT @ 0.125A	24V @ 0.25A
ST-5-48	DST-5-48	48VCT @ 0.25A	24V @ 0.5A
ST-6-48	DST-6-48	48VCT @ 0.4A	24V @ 0.8A
ST-7-48	DST-7-48	48VCT @ 0.75A	24V @ 1.5A
ST-2-56	DST-2-56	56VCT @ 0.02A	28V @ 0.04A
ST-3-56	DST-3-56	56VCT @ 0.045A	28V @ 0.09A
ST-4-56	DST-4-56	56VCT @ 0.11A	28V @ 0.22A
ST-5-56	DST-5-56	56VCT @ 0.22A	28V @ 0.44A
ST-6-56	DST-6-56	56VCT @ 0.35A	28V @ 0.7A
ST-7-56	DST-7-56	56VCT @ 0.65A	28V @ 1.3A
ST-2-120	DST-2-120	120VCT @ 0.01A	60V @ 0.02A
ST-3-120	DST-3-120	120VCT @ 0.02A	60V @ 0.04A
ST-4-120	DST-4-120	120VCT @ 0.05A	60V @ 0.1A
ST-5-120	DST-5-120	120VCT @ 0.1A	60V @ 0.2A
ST-6-120	DST-6-120	120VCT @ 0.16A	60V @ 0.32A
ST-7-120	DST-7-120	120VCT @ 0.3A	60V @ 0.6A

Custom versions available upon request.

©2013 Signal Transformer Inc. Specifications subject to change without notice. 08.13

Signal Transformer
www.signaltransformer.com

500 Bayview Avenue, Inwood, NY 11096
Toll Free 866-239-5777 • Tel 516-239-5777 • Fax 516-239-7208
sales@signaltransformer.com • techhelp@signaltransformer.com

Split/Tran™ Low Power Transformers

Split Bobbin with High Isolation

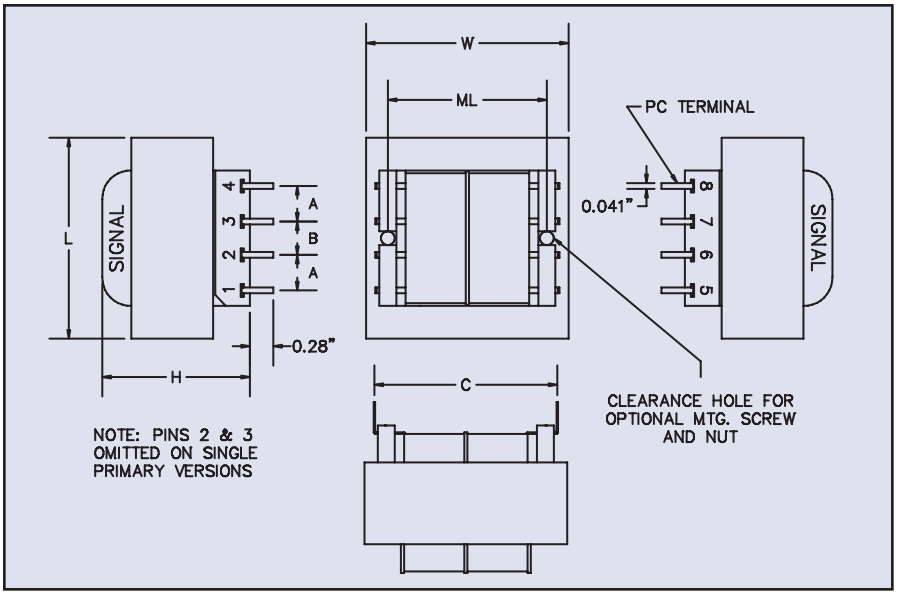

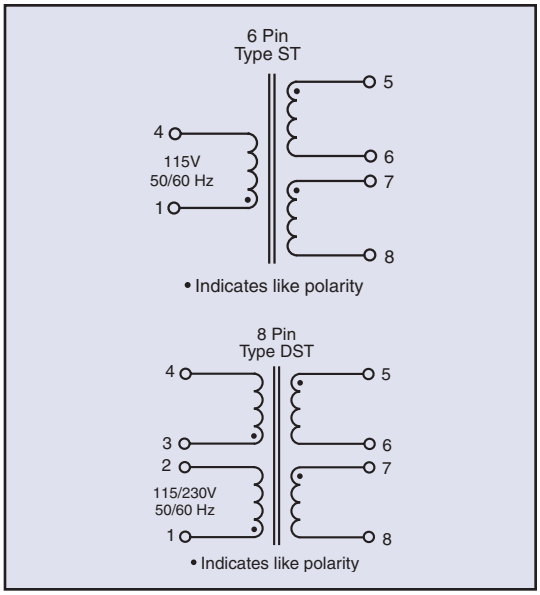

Size	VA	L	W	H	ML	A	B	C	Optional Mounting Screw & Nut†	Weight
		Inches (mm)								lbs (kg)
2	1.1	1.37 (34.9)	1.12 (28.6)	0.97 (24.6)	-	0.25 (6.4)	0.25 (6.4)	1.20 (30.5)	-	0.17 (0.08)
3	2.4	1.37 (34.9)	1.12 (28.6)	1.21 (30.8)	-	0.25 (6.4)	0.25 (6.4)	1.20 (30.5)	-	0.25 (0.11)
4	6	1.62 (41.3)	1.31 (33.3)	1.31 (33.3)	1.06 (26.9)	0.25 (6.4)	0.35 (8.9)	1.25 (32.5)	Nylon 4-40 x 1.37 (4-40 x 34.9)	0.44 (0.20)
5	12	1.91 (48.4)	1.59 (40.4)	1.45 (36.9)	1.25 (31.8)	0.30 (7.6)	0.40 (10.2)	1.41 (35.8)	Nylon 4-40 x 1.37 (4-40 x 34.9)	0.70 (0.32)
6	20	2.25 (57.2)	1.88 (47.8)	1.45 (36.9)	1.50 (38.1)	0.30 (7.6)	0.40 (10.2)	1.60 (40.6)	Nylon 4-40 x 1.37 (4-40 x 34.9)	0.80 (0.36)
7	36	2.62 (66.7)	2.18 (55.5)	1.59 (40.4)	††	0.40 (10.2)	0.40 (10.2)	1.85 (47.0)	††	1.1 (0.50)

† Available from Signal, part numbers ST-MS (screw) and ST-MN (nut).
††Size 7 has 4 mounting holes on 2.18 x 1.75 centers for #6 screws.
** Inherently Limited
* Non Inherently Limited
Recommended secondary fuse value specified as below:

(1)	(2)	(3)	(4)	(5)	(6)	(7)	(8)	(9)	(10)	(11)	(12)	(13)
0.125A	0.15A	0.25A	0.3A	0.375A	0.4A	0.5A	0.6A	0.75A	1.0A	1.5A	2.0A	3.0A

See Accessories page for mounting screw information.

Custom versions available upon request.

©2013 Signal Transformer Inc. Specifications subject to change without notice. 08.13

Signal Transformer
www.signaltransformer.com

500 Bayview Avenue, Inwood, NY 11096
Toll Free 866-239-5777 • Tel 516-239-5777 • Fax 516-239-7208
sales@signaltransformer.com • techhelp@signaltransformer.com