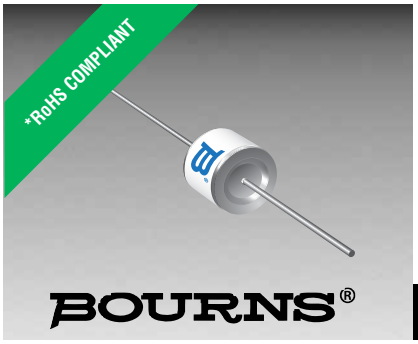

Features

- Formerly a JOSLYN DEVICES product
- Fast switching rate
- High energy, low loss capability
- Wide operating temperature range
- Long service life
- High insulation resistance
- RoHS compliant*

Applications

- Igniters for architectural and automotive Xenon discharge lamps
- Electronic igniters for gas heating and gas domestic appliances, e.g., cookers
- Ignition of ultra-high pressure gas discharge lamps for data and video projectors

Sparctube® Switching Spark Gap ST-0750 Series

Description

Bourns® Sparctube® Switching Spark Gap Series is a range of switching spark gaps designed specifically for voltage controlled switching of capacitive discharge circuits where a high energy, low loss, fast rate of switching is required. This series is ideally suited for applications where a capacitive discharge is utilized with a transformer to obtain pulses of very high voltage levels in the order of several thousand volts.

Characteristics

Initial Values:

Static Breakdown Voltage @ 800 V/s [1]	
First Ignition Values	< 900 V
Following Ignition Values	750 V ±12 %

Electrical Life:

Minimum Number of Switching Cycles	$2x10^5$
Peak Current (Approx.)	450 A
Maximum Switching Frequency	200 Hz
Breakdown Characteristics @ 950 V Limit	
First Ignition Values	≤ 950 V
Delay Time	< 60 ms
Following Ignition Values	750 V ±15 %

General Data:

Breakdown Time	< 50 ns
Insulation Resistance @100 Vdc	> 100 megohms
Maximum Static Breakdown Voltage @ 100 V/ms	1250 V
Share of Early Ignition Values (< 638 V)	< 1 %
Residual Voltage @ 50 ns	< 300 V
Capacitance	< 1 pF
Operating Temperature Range [2]	-40 °C to +160 °C
Storage Temperature Range	-65 °C to +125 °C
Weight (Approx.)	2.3 g
Testing	100 %
Robustness of Terminations	IEC 60068-2-21 [3]

Notes:

[1] At delivery AQL 0.65 Level II, DIN ISO 2859.
[2] Distribution of switchings: maximum 20 % above +125 °C and 20 % below +20°C.
[3] Test Ua1 (tensile), Ua2 (thrust), Ub (bending) and Uc (torsion).

Basic Application Circuit

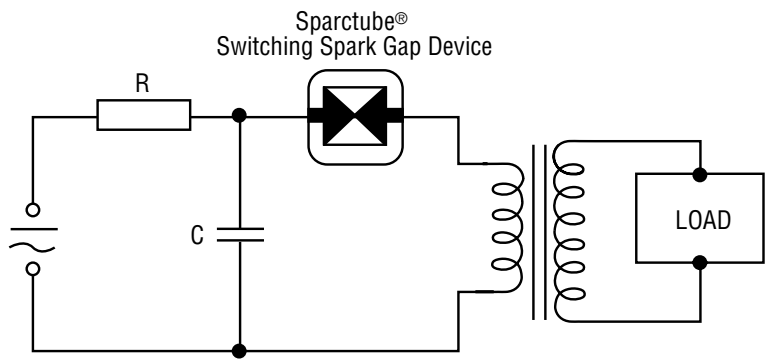

BOURNS®

Asia-Pacific:
Tel: +886-2 2562-4117
Email: asiacus@bourns.com

Europe:
Tel: +36 88 520 390
Email: eurocus@bourns.com

The Americas:
Tel: +1-951 781-5500
Email: americus@bourns.com

www.bourns.com

*RoHS Directive 2002/95/EC Jan. 27, 2003 including annex and RoHS Recast 2011/65/EU June 8, 2011.
Specifications are subject to change without notice.
The device characteristics and parameters in this data sheet can and do vary in different applications and actual device performance may vary over time.
Users should verify actual device performance in their specific applications.

Product Dimensions

ST-0750-BLx

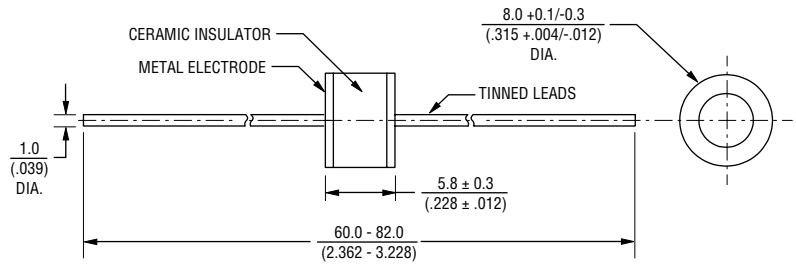

ST-0750-BCx

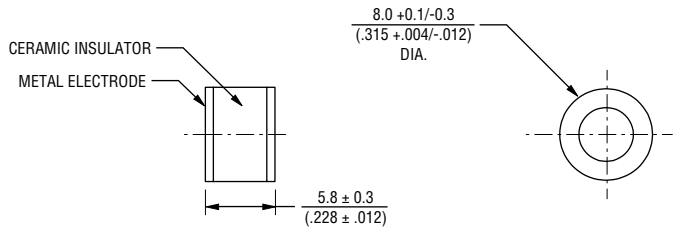

ST-0750-BBx

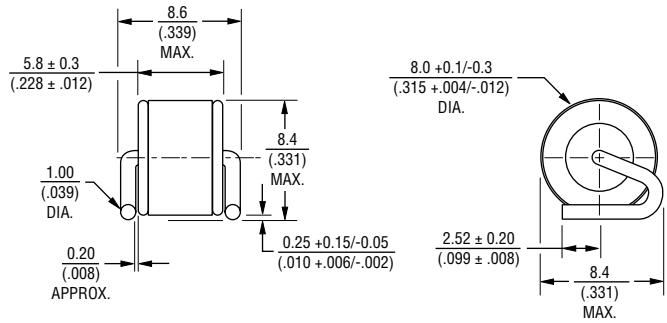

DIMENSIONS: MM / (INCHES)

How to Order

ST - 0750 - B x x - STD

Series Designator

Switching Voltage
0750 = 750 V

Tolerance
B = 12 %

Lead Shape
B = Bent Leads
C = No Leads*
L = Straight Leads

Packaging
B = Bulk
T = Tape & Reel*

Standard or Modified Product Indicator
STD = Standard

*Leadless version available in bulk packaging only.

Typical Part Marking

B ST 0750 wwy ..... "wwy" = Week and year of production

Recommended Pad Layout

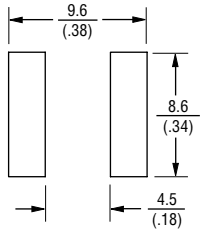

Test Circuit

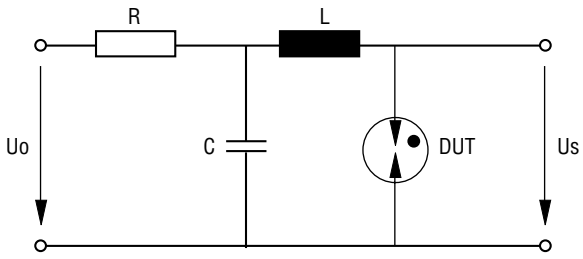

Uo.....1000-1500 V
R.....See Note
C.....100 nF
L.....0.5 μH
DUT.....Device Under Test
Us.....Breakdown Voltages

NOTE: Uo and R are set to provide suitable conditions for different measurements.

Specifications are subject to change without notice.
The device characteristics and parameters in this data sheet can and do vary in different applications and actual device performance may vary over time.
Users should verify actual device performance in their specific applications.

Packaging Specifications

Models ST-0750-BBB, ST-0750-BLB and ST-0750-BCB* ship standard bulk pack, 1,000 pcs./bag. The optional tape and reel packaging contains 1,000 pcs./reel for Model ST-0750-BLT; 500 pcs./reel for Model ST-0750-BBT.

* Available in bulk packaging only.

ST-0750-BLT

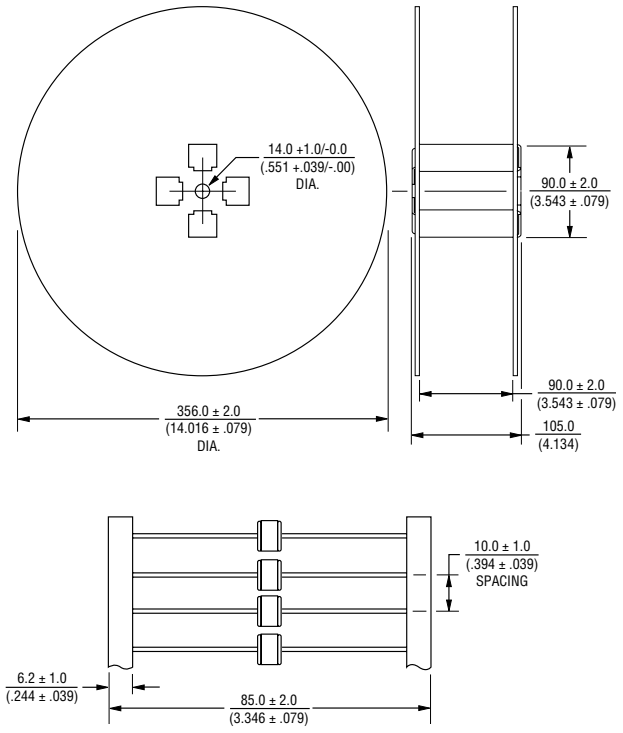

ST-0750-BBT

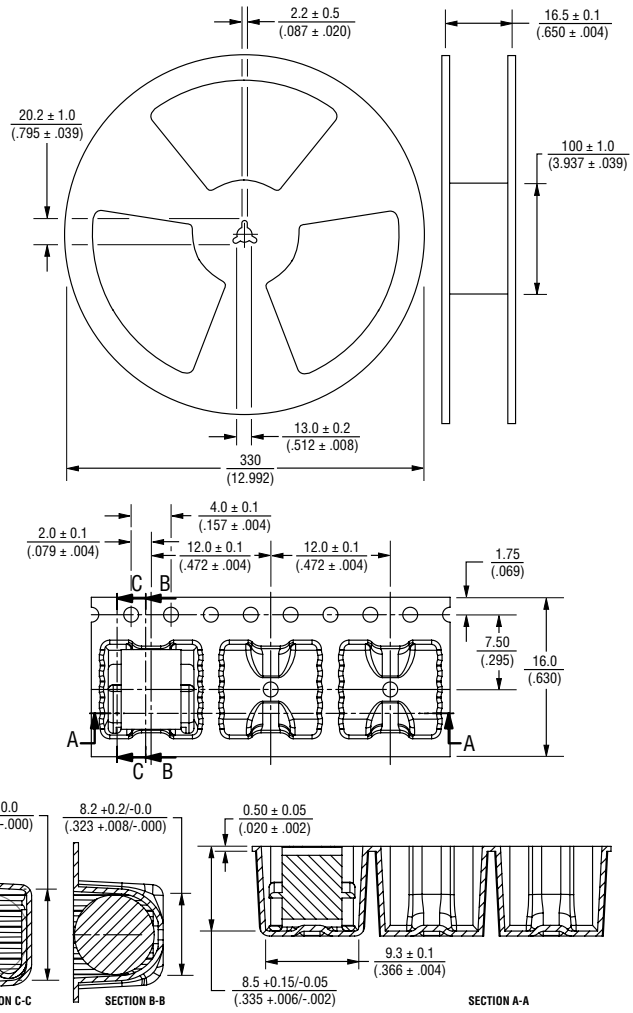

DIMENSIONS: MM / (INCHES)

REV. 07/16

"Sparctube" is a registered trademark of Bourns, Inc. in the U.S., the European Community and People's Republic of China.
Specifications are subject to change without notice.
The device characteristics and parameters in this data sheet can and do vary in different applications and actual device performance may vary over time.
Users should verify actual device performance in their specific applications.