SPECIFICATION FOR APPROVAL

Customer：

Description： Magnetic Transducer

Soberton Part No. ： ST-025BL

Date：2008-12-18

Customer Model No. ：

Date of Approval	
Authorization Signature	

211 N. First Street
Minneapolis, MN. 55401
612-849-6205
Http://www.soberton.com E-mail： info@soberton.com

Approved	Checked	Design
Ryan 2008/12/18	Wang Wei Rong 2008/12/18	Xu Hong Wei 2008/12/18

A:SCOPE

This specification applies magnetic buzzer, ST-025BL

B:SPECIFICATION

■ Test condition: TEMP=+25±2 ℃ Related humidity=45~60±5% Air pressure:860-1060mbar

NO.	Item	Unit	Specification	Condition
1	Rated Voltage	Vo-p	3.6	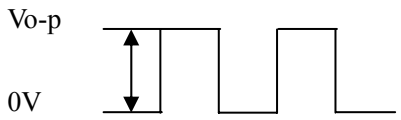
2	Operating Voltage	Vo-p	2.5 - 4.5	
3	Mean Current	mA	Max. 100	Applying rated voltage & rated frequency, square wave 1/2 duty
4	Coil Resistance	Ω	16 ± 3	
5	Sound Output	dBA	80/10cm	Distance at 10cm(A-weight free air), Applying rated voltage & rated frequency, square wave,1/2duty
6	Rated Frequency	Hz	2300	
7	Operating Temp	℃	-30-+85	
8	Storage Temp	℃	-40-+85	
9	Dimension	mm	7.5 × 7.5 × 2.5	See attached drawing.
10	Weight	gram	0.8	
11	Material		LCP (Black)	
12	Terminal		SMD type	See attached drawing
13	Environmental Protection Regulation		RoHS	
14	Storage life	month	3	3 months preservation at room temp(25±3℃), Humidity40%

C:ENVIRONMENT TEST

No.	Item	Test condition	Evaluation standard
1	High temp. test	After being placed in a chamber at +85℃ for 96 hours.	After the test the part shall meet specifications without any degradation in appearance and performance except SPL. after 4 hours at +25℃, The SPL shall be in ± 10 dBA compared with initial one.
2	Low temp. test	After being placed in a chamber at -30℃ for 96 hours.	
3	Thermal shock	The part shall be subjected to 10 cycles. One cycle shall consist of; 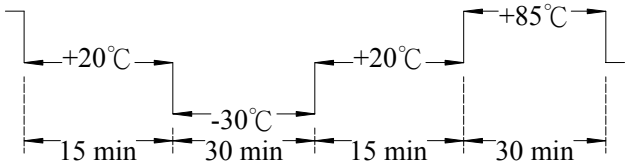 	
4	Temp. / Humidity Cycle	The part shall be subjected to 10 cycle and consist of; 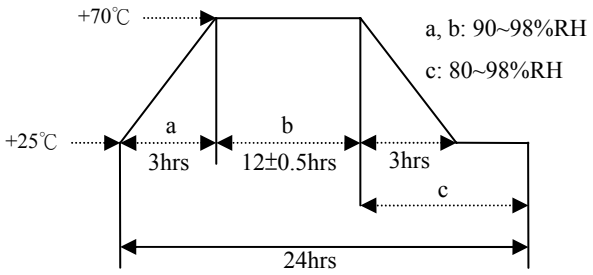 	

D: RELIABILITY TEST

No.	Item	Test condition	Evaluation standard
1	Operating life test	□ Applying rated voltage, rated frequency, square wave , 1/2 duty cycle： Ordinary temperature The part shall be subjected to 96 hours at room temperature.	After the test the part shall meet specifications without any degradation in appearance and performance except SPL. after 4 hours at +25℃,The SPL shall be in ± 10 dBA compared with initial one.

TEST CONDITION.

Standard Test Condition : a)Temperature: +5~+35℃ b)Humidity:45~85% c)Pressure: 860~1060mbar

Judgment Test Condition :a)Temperature:+25±2℃ b)Humidity:60~70% c)Pressure: 860~1060mbar

E:MECHANICAL CHARACTERISTICS

No	Item	Test condition	Evaluation standard
1	Solderability	Lead terminal are immersed in rosin for 5 seconds and then immersed in Solder bath of +260±5℃ for 3±0.5 second	90% min. lead terminals shall be wet with solder
2	Soldering Heat Resistance	Lead terminal are immersed in soldering bath of +260±5℃ for3±0.5 Second.	
3	Iron Soldering Heat Resistance	Lead terminal are soldering of +350±5℃, 2.5±0.5 Second.	No interference in operation
4	Terminal Mechanical Strength	Apply the terminal with 9.8N(1kg) strength for 10±1 sec.	No damage and cutting off
5	Vibration	The part shall be subjected to a vibration cycle of 10Hz to 55Hz to 10Hz in a period of 1 minute. Total peak amplitude shall be 1.52mm(9.3G).The vibration test shall consist of 2 hours per axis in each three axes(X,Y,Z),Total 6 hours.	After the test the part shall meet specifications without any damage in appearance and performance except SPL. The SPL shall be in ± 10 dBA compared with initial one.
6	Drop test	The part only shall be dropped from a height of 75cm onto a wooden board 1 times.	

* Reflow profile of lead-free

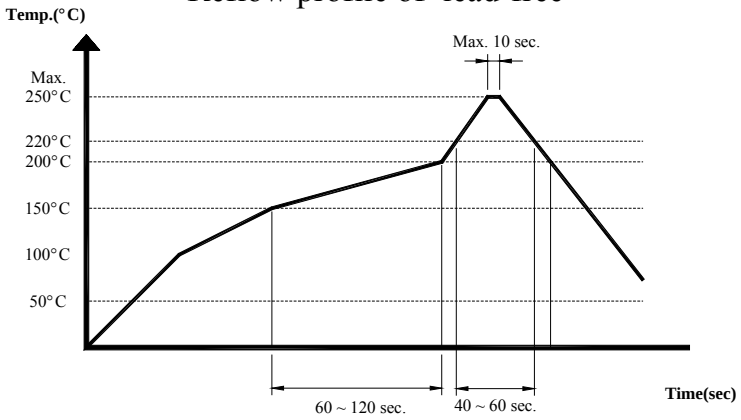

Recommendable reflow soldering condition is as follows.
Note 1: It is requested that reflow soldering should be executed after heat of product goes down to normal temperature.
Note 2: Peak reflow temperature of 250°C Max.10 sec., with a maximum duration of 40~60 sec. between 220°C and 250°C

F: MEASUREMENT METHOD

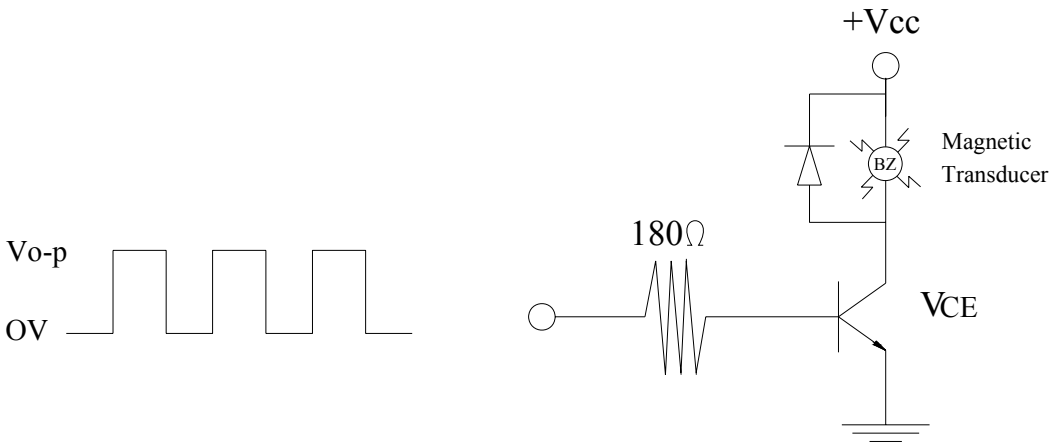

G: INSPECTION FIXTURE

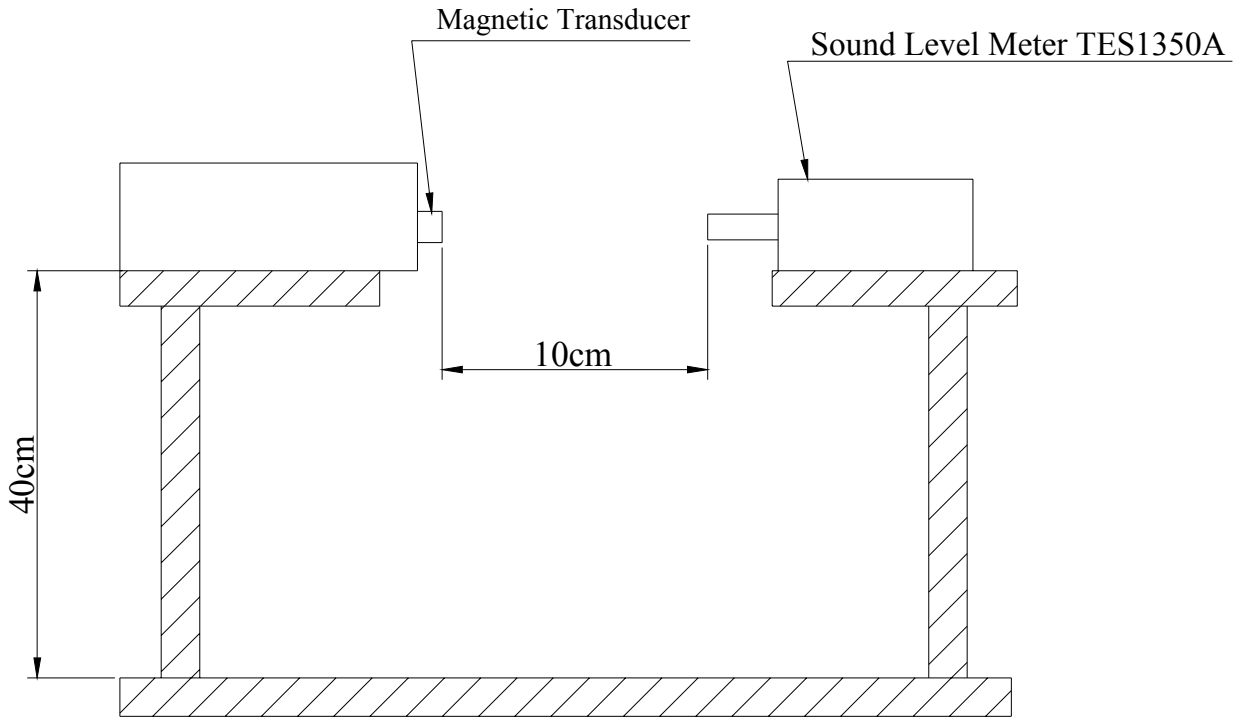

H: PACKING

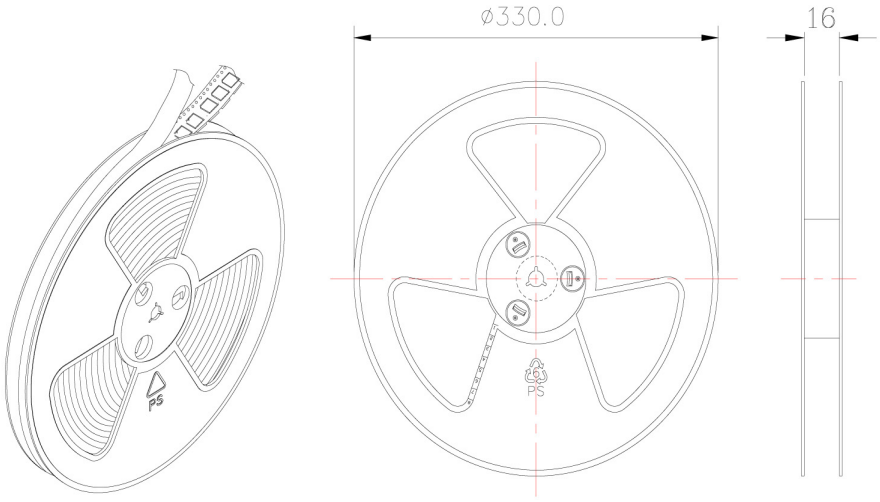

1 Reel : 2000PCS

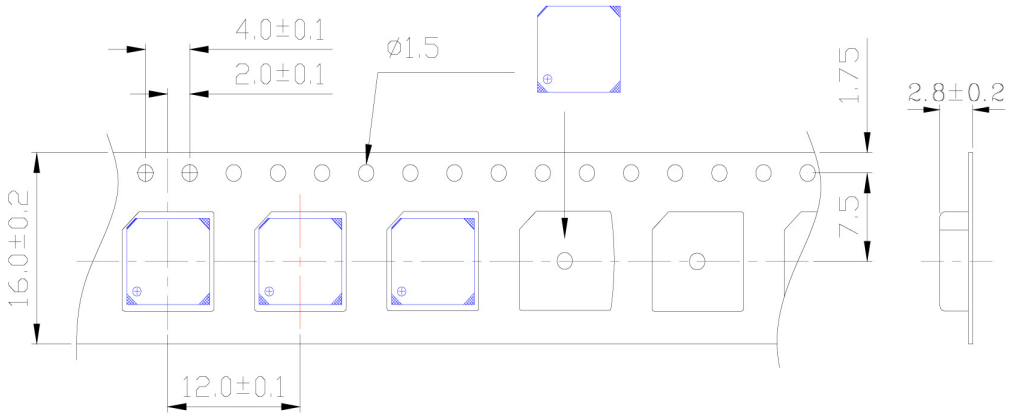

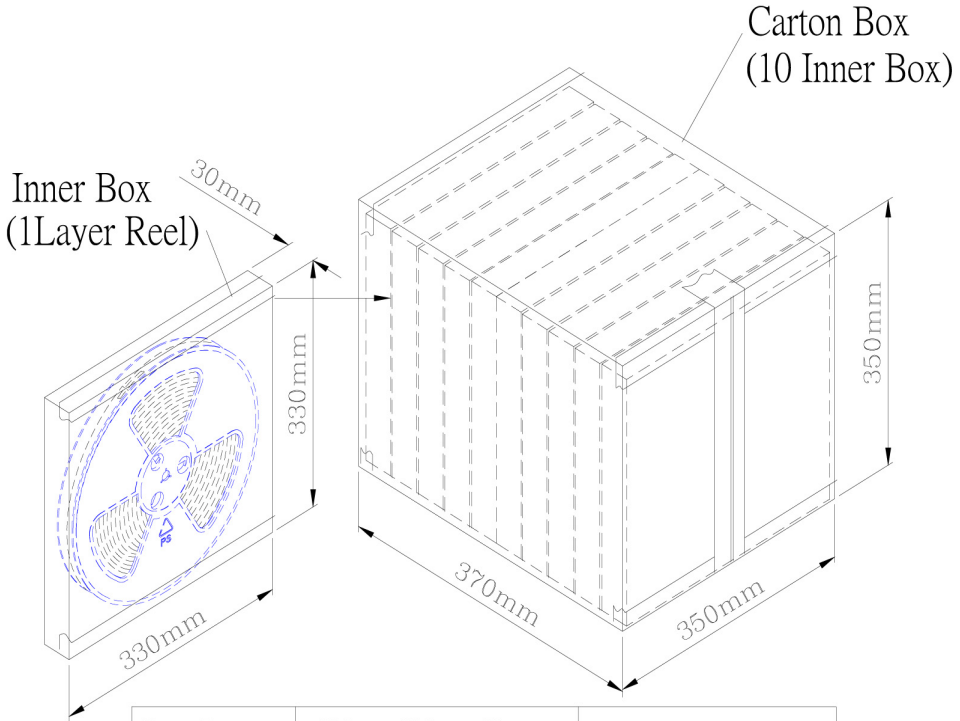

Inner Box	330mmx330mmx30mm	1x2000PCS=2000PCS
Carton Box	350mmx350mmx370mm	10x2000PCS=20,000PCS

I : DRAWING

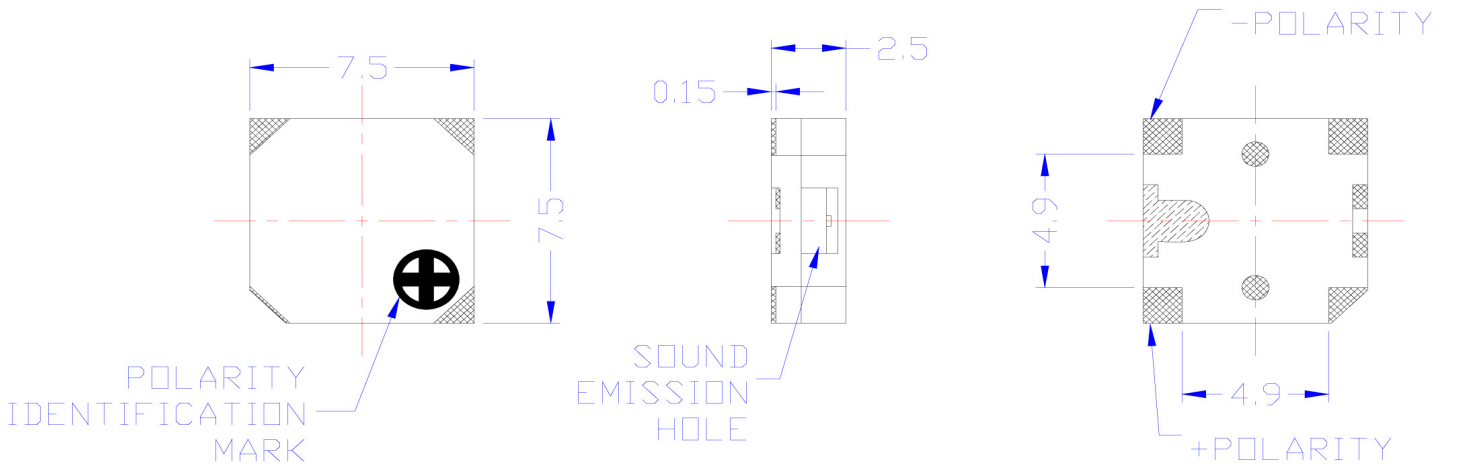

TOLEERANCE : ± 0.30

Suggested
Solder Pad
Layout

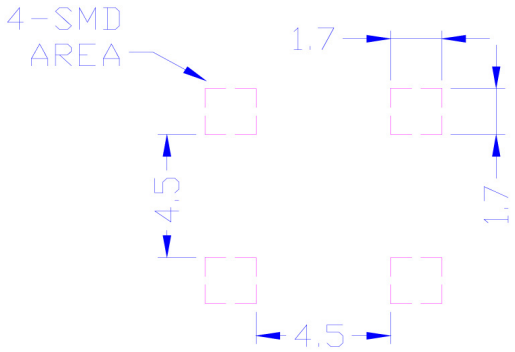

Soberton Inc.	DR.		SCALE	2/1	TITLE	MAGNETIC SOUND TRANSDUCER		
	CHK.		SHEET		MATERIAL	HOUSING : LCP	PART NO.	
MODEL NO. ST-025BL	APP.		UNIT	mm	FINISH		DWG. NO.	

NO	DATE	ECN. NO.
5		
4		
3		
2		
1		