2.4-2.5 GHz / 4.9-5.8 GHz Dual-Band Power Amplifier Module
SST13LP05

Data Sheet

The SST13LP05 is a fully matched, dual-band power amplifier module (PAM) based on the highly-reliable InGaP/GaAs HBT technology. This PAM provides excellent RF performance, temperature-stable power detectors, and low-current analog on/off control interfaces. The SST13LP05 provides stable RF and power detector performance over a large VCC power supply variation, with an ultra-low shut-down current. The SST13LP05 is ideal for the final stage power amplification in both battery-powered 802.11a/b/g WLAN transmitters and access point applications.

Features

- **High Gain:**
  - Typically 29 dB gain across 2.4-2.5 GHz
  - Typically 29-26 dB gain across 4.9-5.8 GHz10/12
- **High linear output power:**
  - >25 dBm P1dB (Pulsed single-tone signal) across 2.4-2.5 GHz
  - Meets 802.11b OFDM ACPR requirement up to 23.5 dBm across 2.4-2.5 GHz
  - Meets 802.11g OFDM ACPR requirement up to 23 dBm across 2.4-2.5 GHz
  - Added EVM ~4% up to 19 dBm for 54 Mbps 802.11g signal across 2.4-2.5 GHz
  - >24 dBm P1dB across 4.9-5.8 GHz
  - Meets 802.11a OFDM ACPR requirement up to 22.5 dBm across 4.9-5.8 GHz
  - Added EVM ~4% up to 18 dBm for 54 Mbps 802.11a signal across 4.9-5.8 GHz
- **High power-added efficiency/Low operating current for 802.11a/b/g applications**
  - ~160 mA @ P_{OUT} = 19 dBm for 802.11g
  - ~235 mA @ P_{OUT} = 23.5 dBm for 802.11b
  - ~270 mA @ P_{OUT} = 18 dBm for 802.11a
- **Built-in Ultra-low I_{REF} power-up/down control**
  - I_{REF} < 2 mA
- **High-speed power-up/down**
  - Turn on/off time (10%-90%) <100 ns
  - Typical power-up/down delay with driver delay included <200 ns
- **High temperature stability**
  - ~1 dB gain/power variation between 0°C to +85°C across 2.4-2.5 GHz
  - ~3/1 dB gain/max linear power variation between 0°C to +85°C across 4.9-5.8 GHz
  - ±0.5 dB detector variation between 0°C to +85°C
- **Low shut-down current (< 2 µA)**
- **20 dB dynamic range on-chip power detection**
- **Built-in input/output matching**
- **Packages available**
  - 16-contact LGA package (4mm x 4mm)
- **All non-Pb (lead-free) devices are ROHS compliant.**

Applications

- **WLAN (IEEE 802.11a/g/b)**
- **Japanese WLAN**
- **HyperLAN2**
- **Multimedia**
- **Home RF**
- **Cordless phones**

Microchip Proprietary Information

Product Description

The SST13LP05 is a fully matched, dual-band power amplifier module (PAM) based on the highly-reliable InGaP/GaAs HBT technology. This PAM provides excellent RF performance, temperature-stable power detectors, and low-current analog on/off control interfaces. The SST13LP05 provides stable RF and power detector performance over a large V_{CC} power supply variation, with an ultra-low shut-down current.

With a near-zero Rest of Bill of Materials (RBOM), the SST13LP05 is designed for 802.11a/b/g applications covering frequency bands 2.4-2.5 GHz and 4.9-5.8 GHz for U.S., European, and Japanese markets.

The SST13LP05 has excellent linearity, typically 4% added Error Vector Magnitude (EVM) at 19 dBm output power. This output power is essential for 54 Mbps 802.11g operation while meeting 802.11g spectrum mask at 23 dBm and 802.11b spectrum mask at 23.5 dBm. For 802.11a operation, the SST13LP05 typically demonstrates <4% added EVM at 18 dBm output power while meeting 802.11a spectrum mask at 22.5 dBm.

The SST13LP05 also has wide-range (>20 dB), temperature-stable (±0.5 dB across 0°C to +85°C), directionally-coupled, power detectors which provide a reliable and cost-effective solution to board-level power control. The device's analog on/off control can be driven by an analog or digital control signal from either a transceiver or baseband chip.

These features, coupled with low operating current, make the SST13LP05 ideal for the final stage power amplification in both battery-powered 802.11a/b/g WLAN transmitters and access point applications.

The SST13LP05 is offered in a 16-contact LGA package. See Figure 2 for pin assignments and Table 1 for pin descriptions.

©2012 Silicon Storage Technology, Inc.

Microchip Proprietary Information

Functional Blocks

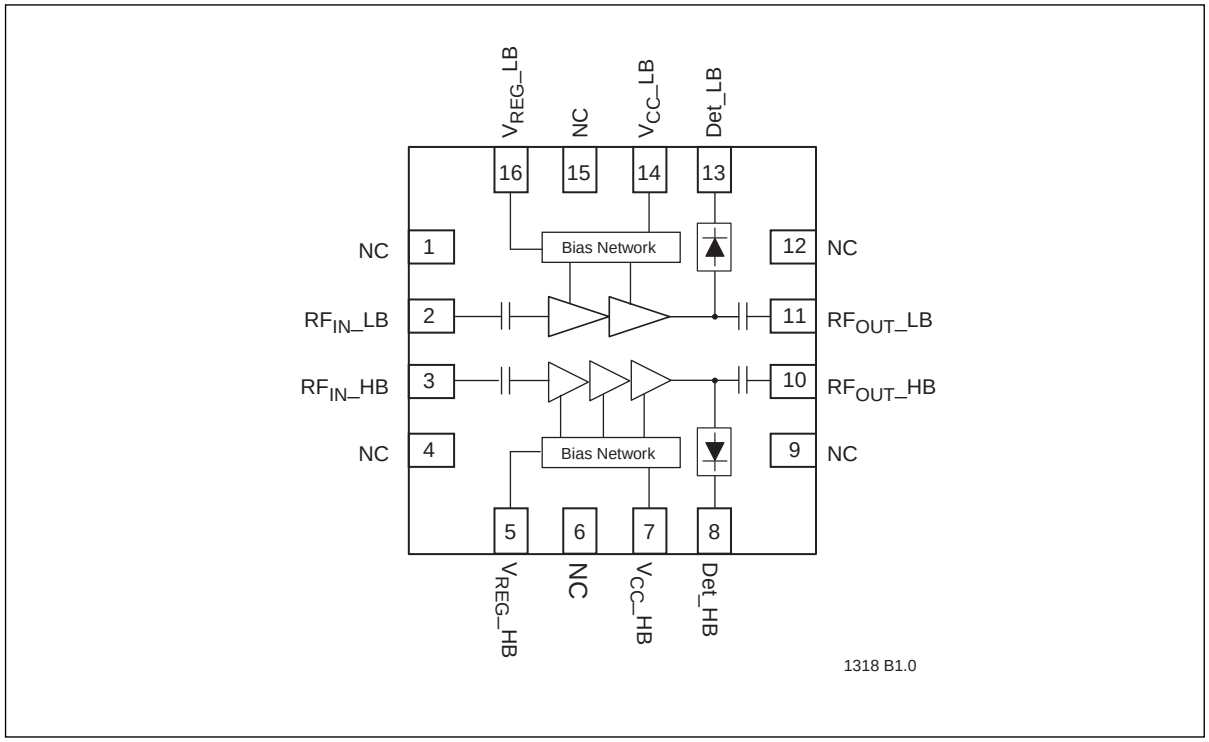

Figure 1: Functional Block Diagram

Microchip Proprietary Information

Pin Assignments

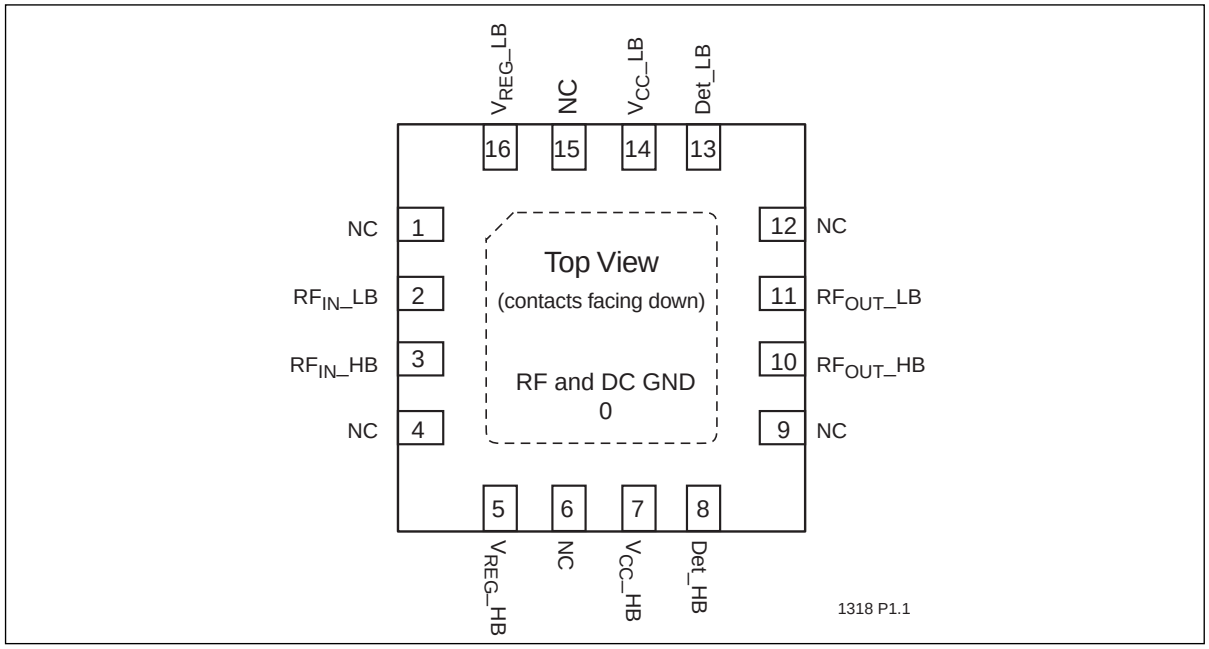

Figure 2: Pin Assignments for 16-contact LGA

Pin Descriptions

Table 1: Pin Description

Symbol	Pin No.	Pin Name	Type	Function
GND	0	Ground		Ground Pad
NC	1	No Connection		Unconnected Pin
RF_{IN}_LB	2		I	50Ω Matched RF Input for Low Band, AC coupled
RF_{IN}_HB	3		I	50Ω Matched RF Input for High Band, AC coupled
NC	4	No Connection		Unconnected Pin
V_{REG}_HB	5	Power Supply	PWR	Analog current control for High Band
NC	6	No Connection		Unconnected Pin
V_{CC}_HB	7	Power Supply	PWR	V_{CC} Power Supply for High Band
D_{ET}_HB	8		O	Detector Voltage Output for High Band
NC	9	No Connection		Unconnected Pin
RF_{OUT}_HB	10	Power Supply	O/PWR	50Ω Matched RF output for High Band
RF_{OUT}_LB	11	Power Supply	O/PWR	50Ω Matched RF output for Low Band
NC	12	No Connection		Unconnected Pin
D_{ET}_LB	13		O	Detector Voltage Output for Low Band
V_{CC}_LB	14	Power Supply	PWR	V_{CC} Power Supply for Low Band
NC	15	No Connection		Unconnected Pin
V_{REG}_LB	16	Power Supply	PWR	Analog current control for Low Band

T1.0 75032

©2012 Silicon Storage Technology, Inc.

Microchip Proprietary Information

Electrical Specifications

The AC and DC specifications for the power amplifier interface signals. Refer to Tables 2 and 4 for the DC voltage and current specifications. Refer to Figures 3 through 22 for the RF performance.

Absolute Maximum Stress Ratings Applied conditions greater than those listed under "Absolute Maximum Stress Ratings" may cause permanent damage to the device. This is a stress rating only and functional operation of the device at these conditions or conditions greater than those defined in the operational sections of this data sheet is not implied. Exposure to absolute maximum stress rating conditions may affect device reliability.

Supply Voltage (V_{CC}) . . . . . -0.3V to +3.6V
Reference Voltage (V_{REF}) . . . . . -0.3V to +3.3V
DC supply current (I_{CC}) . . . . . 400 mA
Operating Temperature (T_A) . . . . . -40ºC to +85ºC
Storage Temperature (T_{STG}) . . . . . -40ºC to +120ºC
Maximum Junction Temperature (T_J) . . . . . +150ºC

For 802.11b/g Operation

Table 2: DC Electrical Characteristics

Symbol	Parameter	Min.	Typ	Max.	Unit
V_{CC}	Supply Voltage	3.0	3.3	3.6	V
I_{CC}	Supply Current				
	for 802.11g, 19 dBm		160		mA
	for 802.11b, 23.5 dBm		235		mA
I_{REG}	Analog control current at On state			2	mA
V_{REG}	Reference Voltage		2.95		V

T2.0 75032

Table 3: AC Electrical Characteristics for Configuration

Symbol	Parameter	Min.	Typ	Max.	Unit
F_{L-U}	Frequency range	2.4		2.5	GHz
G	Small signal gain	28	29		dB
G_{VAR1}	Gain variation over temperature 0°C – 85°C	-1		1	dB
G_{VAR2}	Gain flatness over any 50 MHz bandwidth	-0.3		0.3	dB
ACPR	Meet 11b spectrum mask	22	23		dBm
	Meet 11g OFDM 54 Mbps spectrum mask	22	23		dBm
Added EVM	P_{OUT} = 19 dBm with 54Mbps			-28	dB
	11g OFDM signal when operating at 3.3V Vcc			4	%
2f, 3f, 4f, 5f	Harmonics at P_{OUT} = 20 dBm			-50	dBc
	Spurious non-harmonics at P_{OUT} = 20 dBm			-60	dBc
	In/Out return loss at 50 Ω nominal impedance	6			dB

T3.0 75032

©2012 Silicon Storage Technology, Inc.

Microchip Proprietary Information

For 802.11a Operation

Table 4: DC Electrical Characteristics

Symbol	Parameter	Min.	Typ	Max.	Unit
V_{CC}	Supply Voltage	3	3.3	3.6	V
I_{CC}	Supply Current for 802.11a, 18 dBm		 270		 mA
I_{REG}	Analog control current at On state			2	µA
V_{REG}	Reference Voltage		2.95		V

T4.1 75032

Table 5: AC Electrical Characteristics for Configuration

Symbol	Parameter	Min.	Typ	Max.	Unit
F_{L-U}	Frequency range	4.92		5.805	GHz
G	Small signal gain across 4.9- 5.8 GHz	26			dB
G_{VAR1}	Gain variation over temperature 0°C – 85°C	-1		1	dB
G_{VAR2}	Gain flatness over any 100 MHz bandwidth	-0.5		0.5	dB
ACPR	Meet 11a OFDM 54 Mbps spectrum mask	22	22.5		dBm
Added EVM	P_{OUT} = 18 dBm with 54Mbps 11aOFDM signal when operating at 3.3V Vcc			-28 4	dB %
2f, 3f, 4f, 5f	Harmonics at 20 dBm			-45	dBc

T5.1 75032

Microchip Proprietary Information

Typical Low Band Performance for 802.11b/g

Test Conditions: V_{CC} = 3.3V, T_A = 25°C, V_{REF} = 2.95V unless otherwise noted

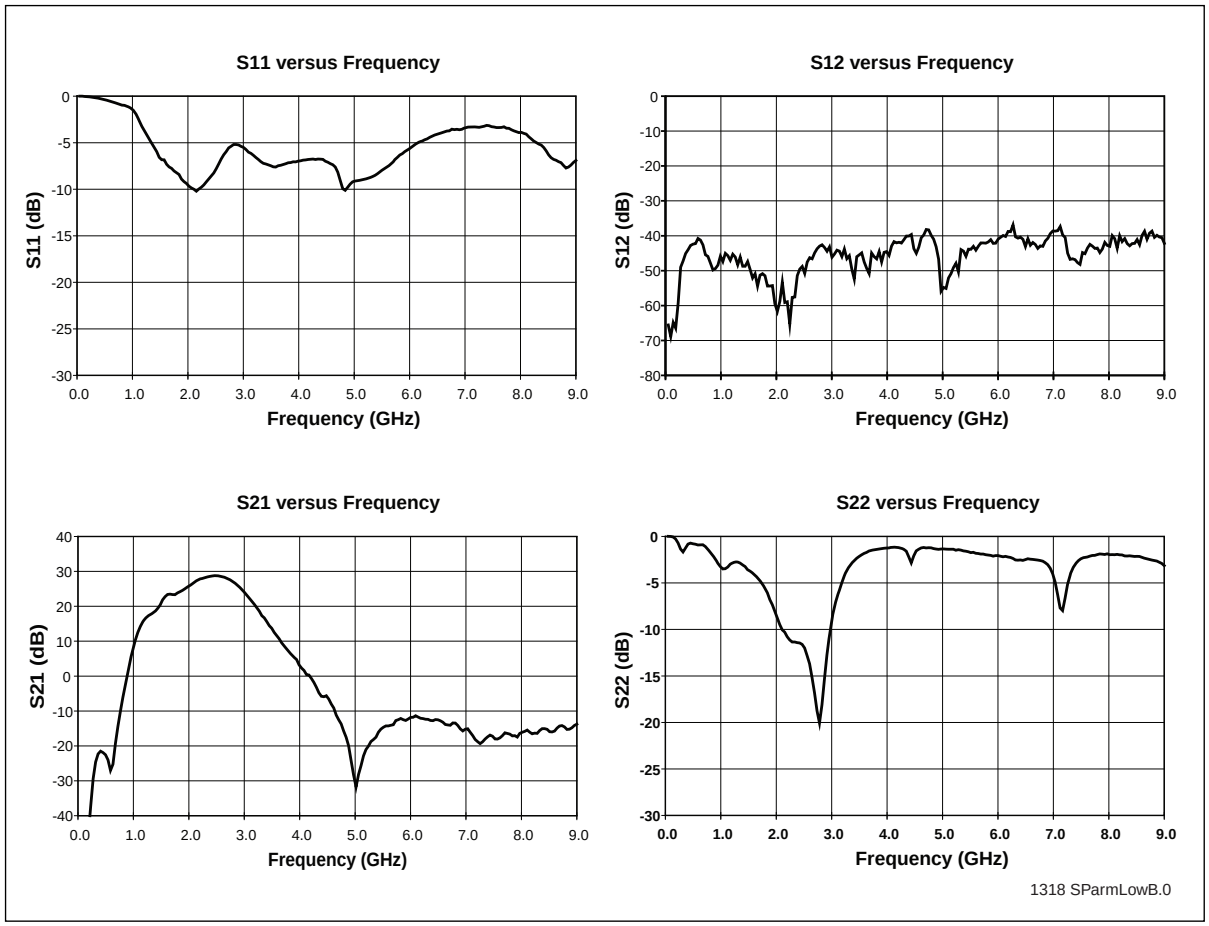

Figure 3: Low Band S-Parameters

Microchip Proprietary Information

Test Conditions: V_{CC} = 3.3 V, V_{REF} = 2.95 V, 54 Mbps 802.11g OFDM signal

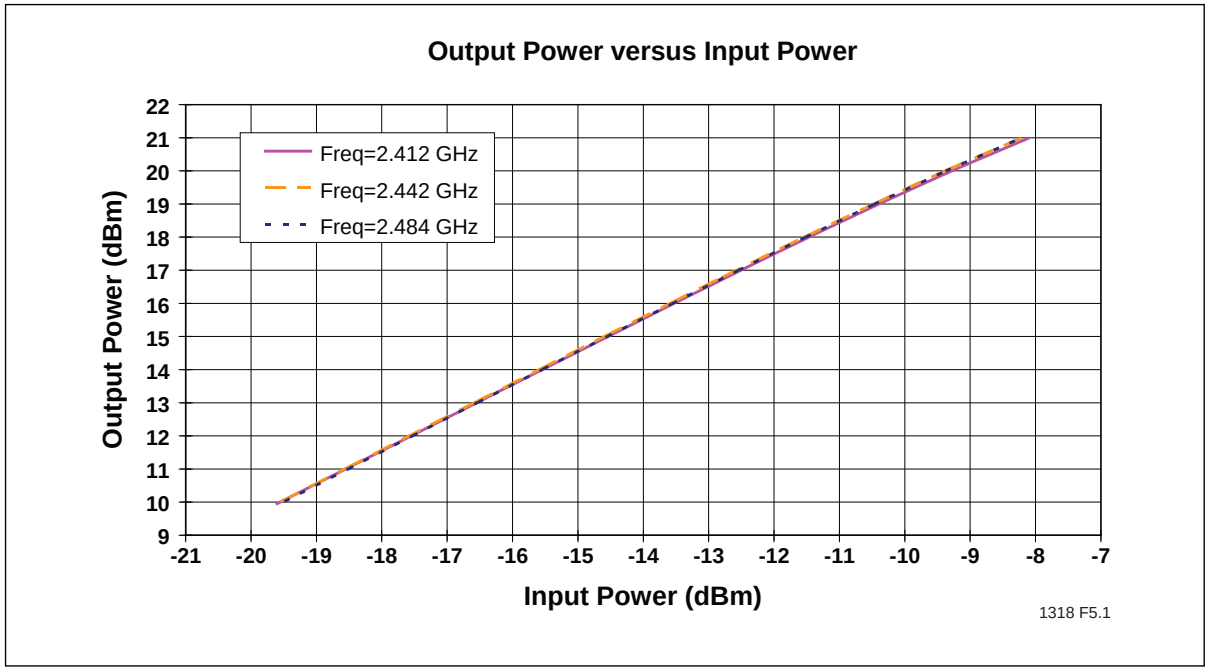

Figure 4: Low Band Output Power versus Input Power

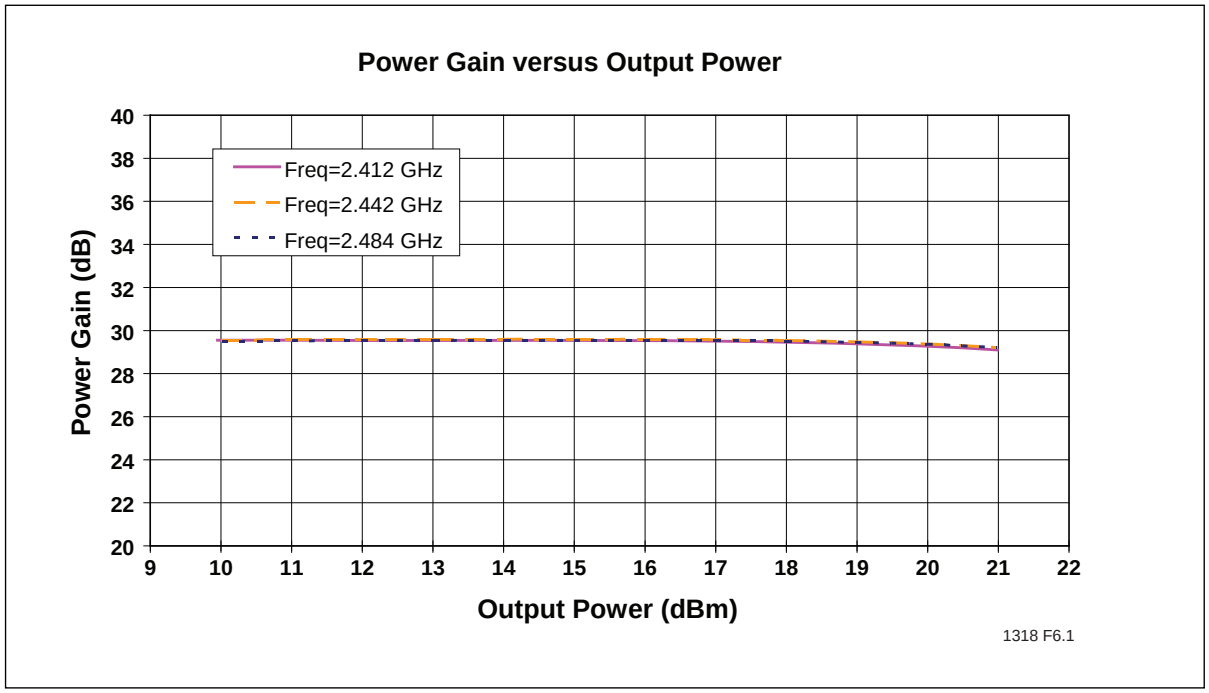

Figure 5: Low Band Power Gain versus Output Power

Microchip Proprietary Information

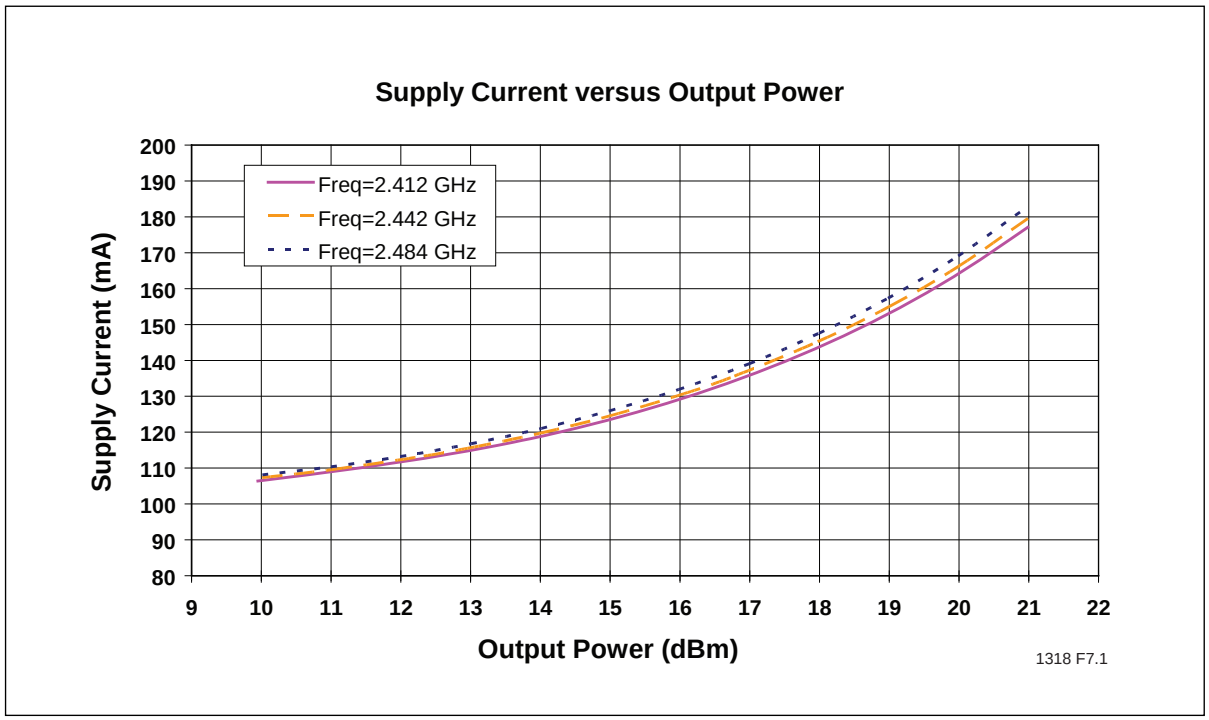

Figure 6: Low Band Supply Current versus Output Power

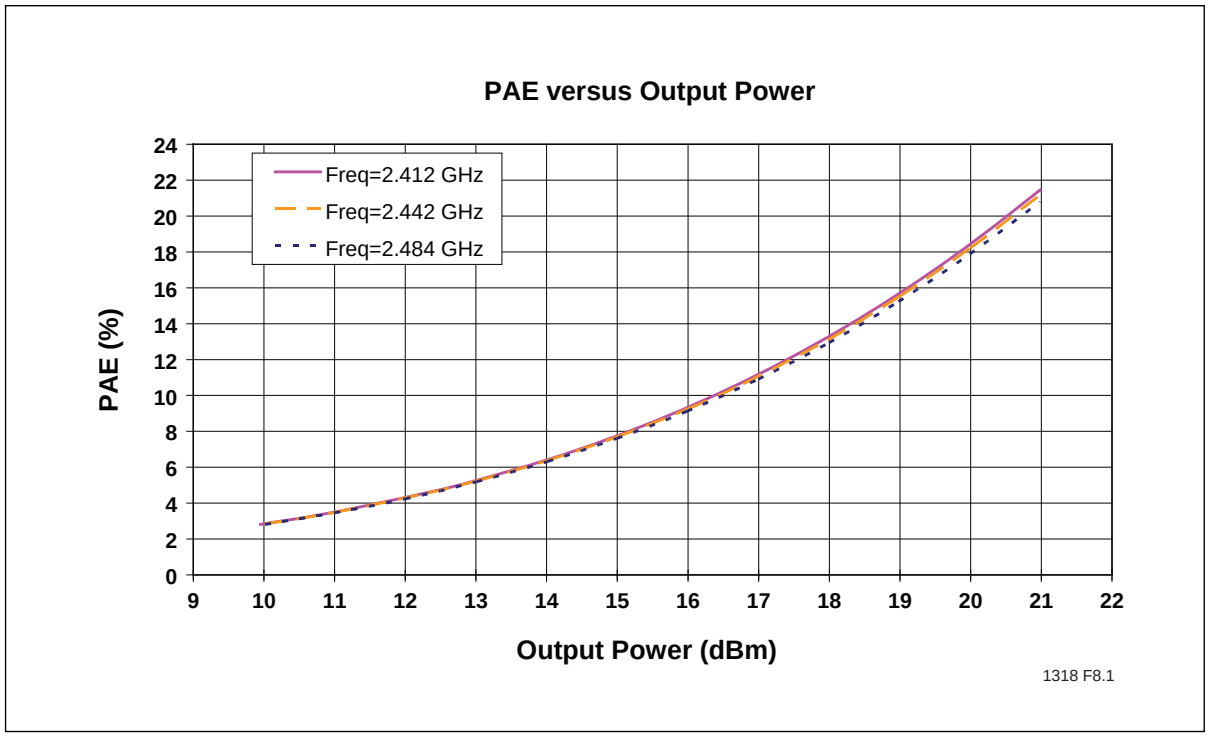

Figure 7: Low Band PAE versus Output Power

Microchip Proprietary Information

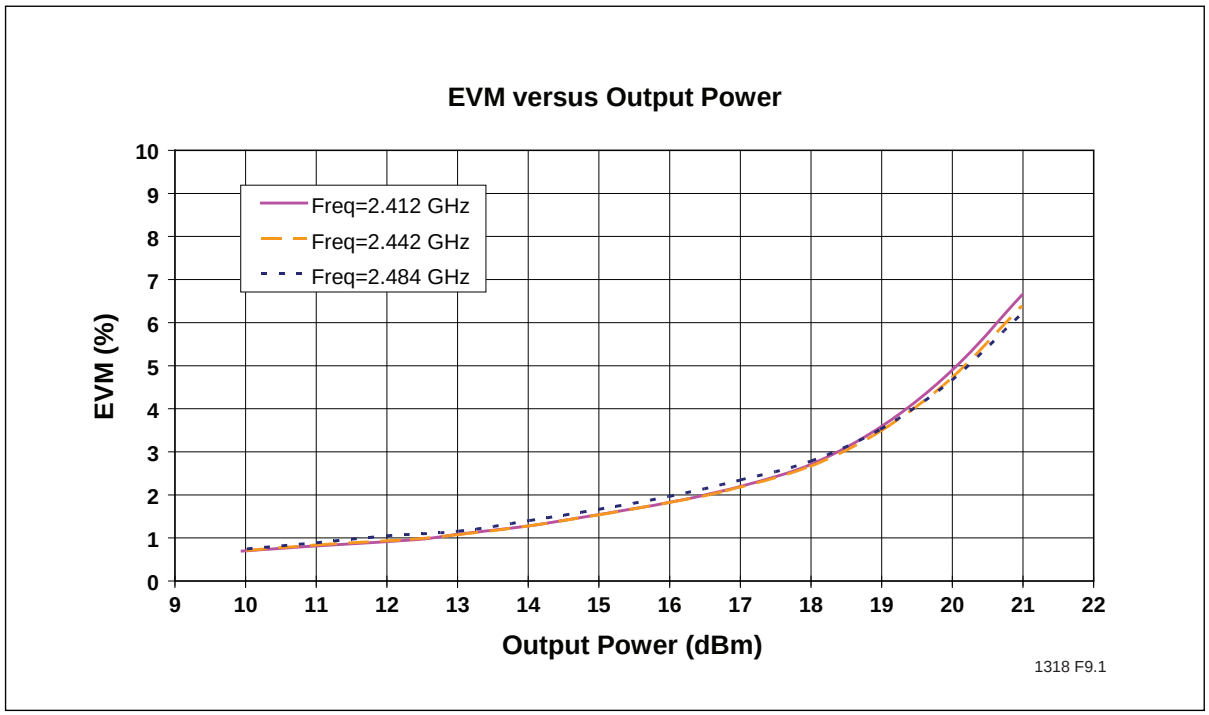

Figure 8: Low Band EMV versus Output Power, Measured with Sequence-plus-data Equalizer Training

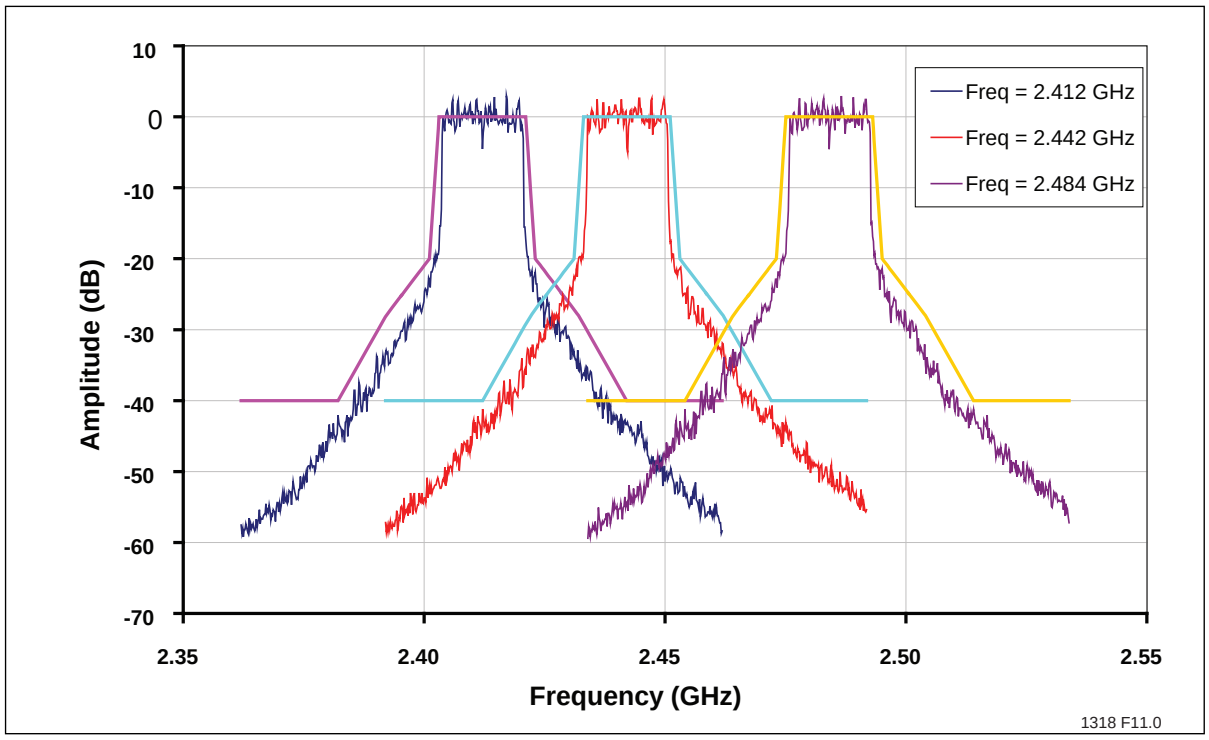

Figure 9: Low Band 802.11b Spectrum Mask at 23 dBm with DC Current of 220 mA

Microchip Proprietary Information

Test Conditions: V_{CC} = 3.3V, V_{REF} = 2.95V, T_A = 25°C, 1 Mbps 802.11b CCK Signal

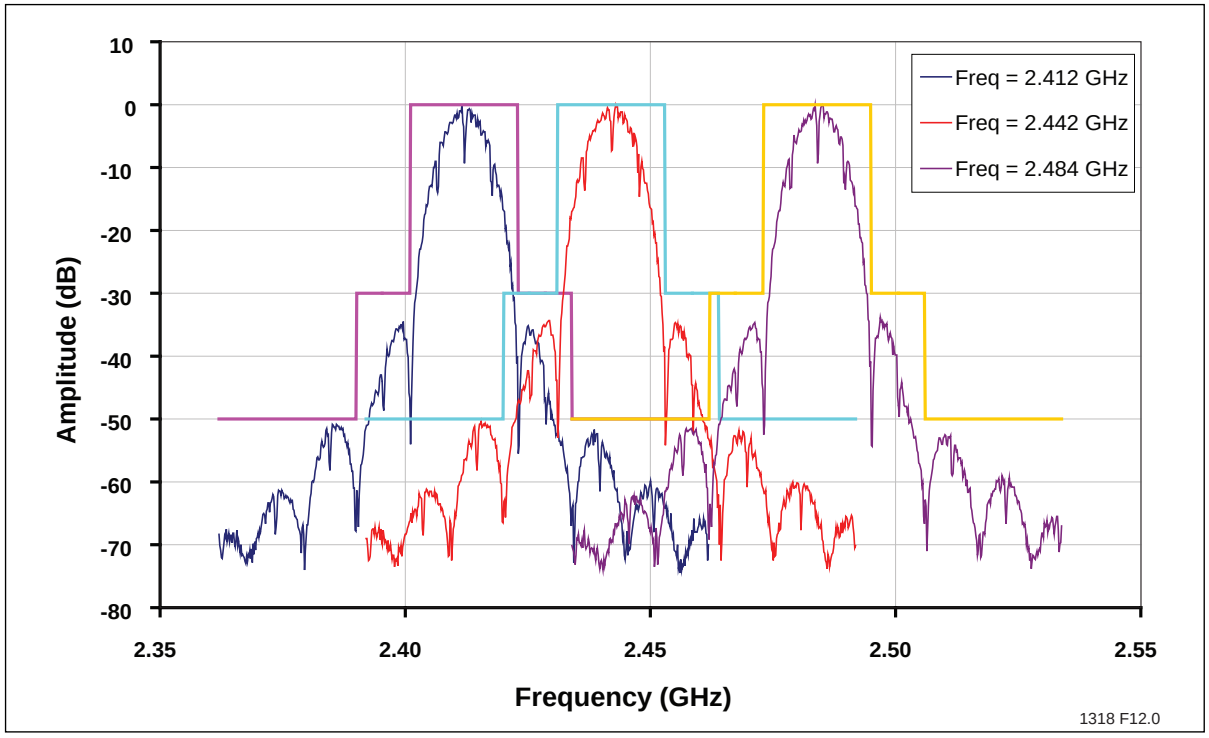

Figure 10: Low Band 802.11b Spectrum Mask at 23.5 dBm with DC Current of 235 mA

Microchip Proprietary Information

Low Band Power Detector Characteristics

Test Conditions: V_{CC} = 3.3V, V_{REF} = 2.95V, T_A = 25°C, 54 Mbps 802.11g OFDM Signal

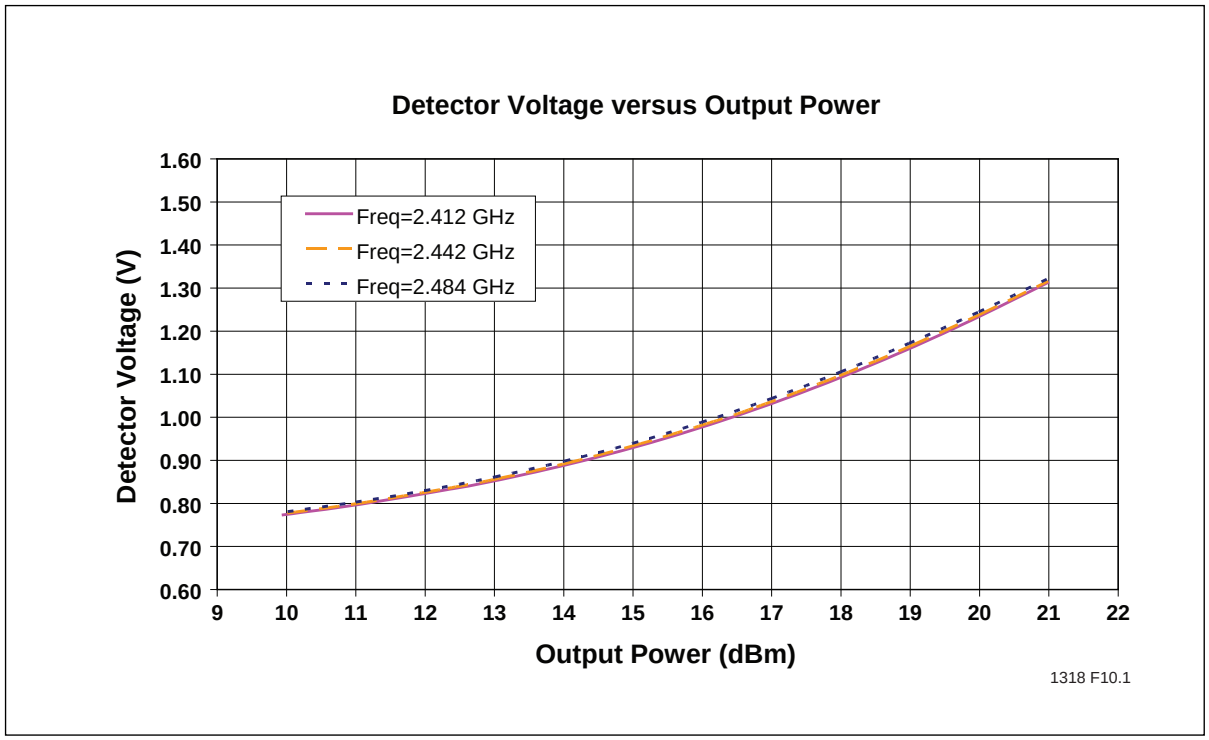

Figure 11: Low Band Detector Voltage versus Output Power

Microchip Proprietary Information

Typical High Band Performance for 802.11a

Test Conditions: V_{CC} = 3.3V, T_A = 25°C, V_{REF} = 2.95V unless otherwise noted

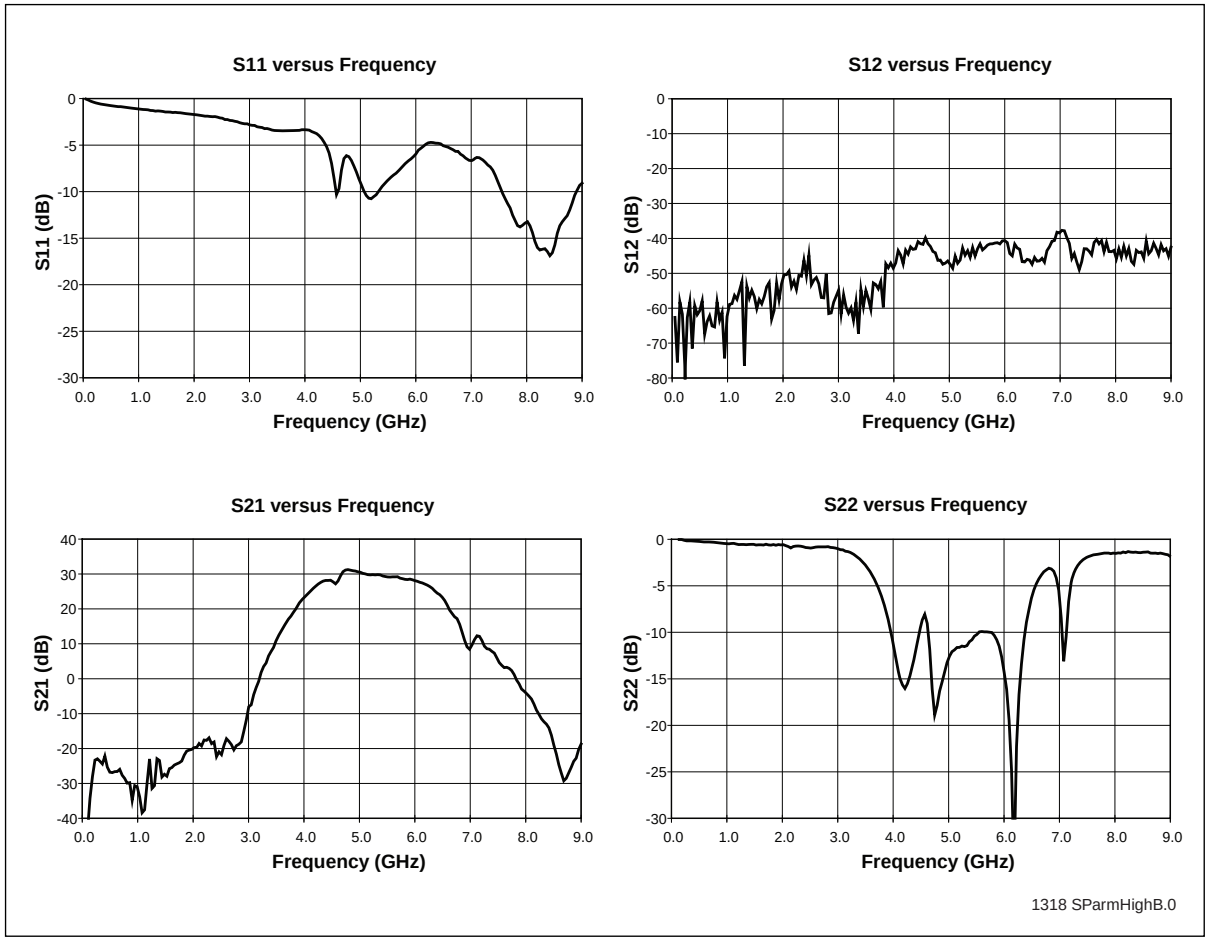

Figure 12: High Band S-Parameters

Microchip Proprietary Information

Test Conditions: V_{CC} = 3.3V, V_{REF} = 2.95V, 54 Mbps 802.11a OFDM Signal

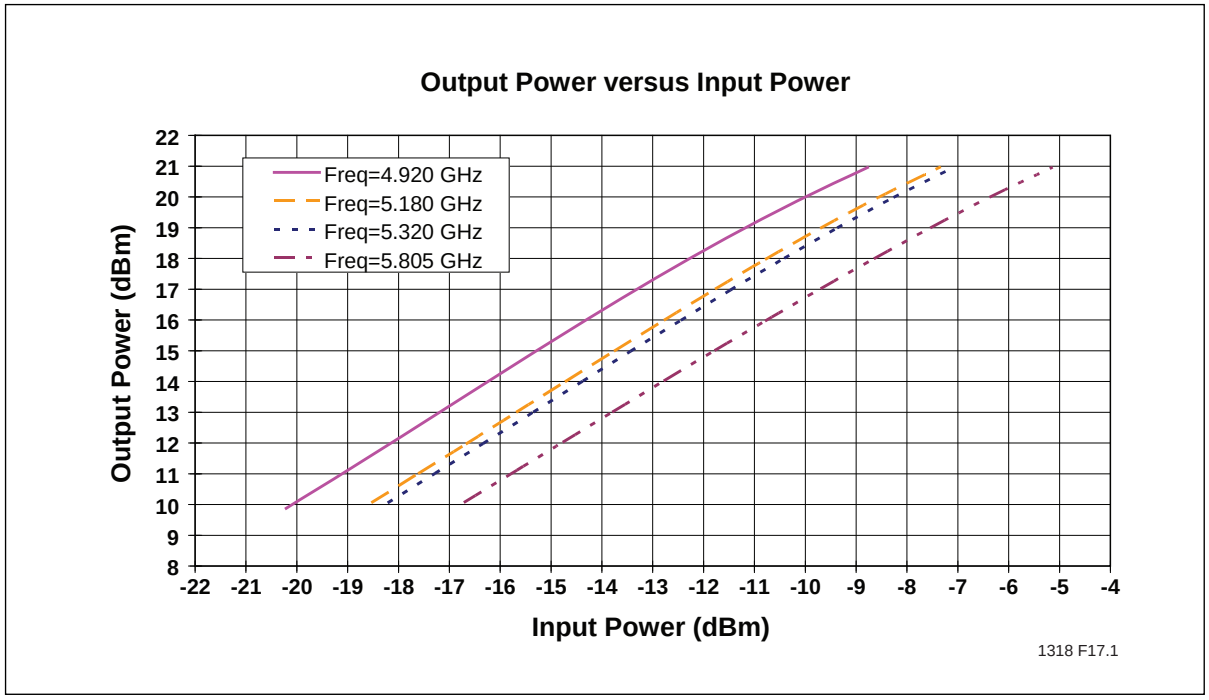

Figure 13: High Band Output Power versus Input Power

Microchip Proprietary Information

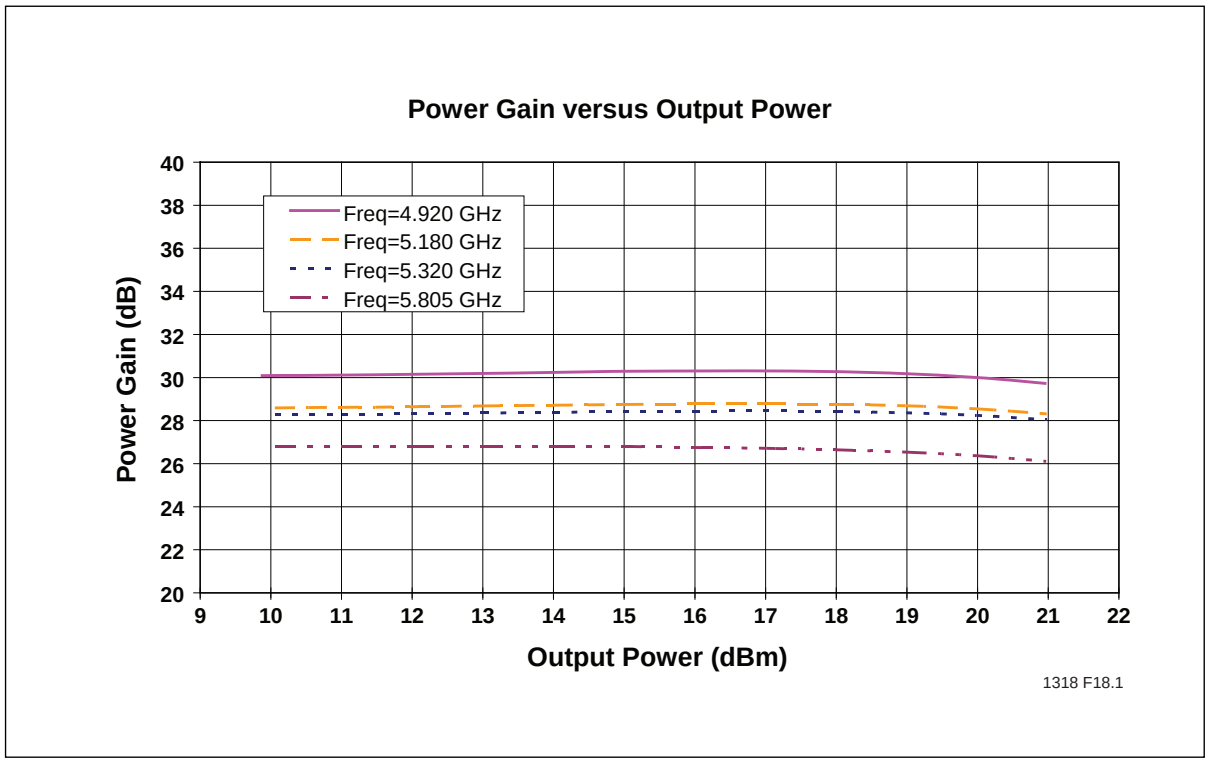

Figure 14: High Band Power Gain versus Output Power

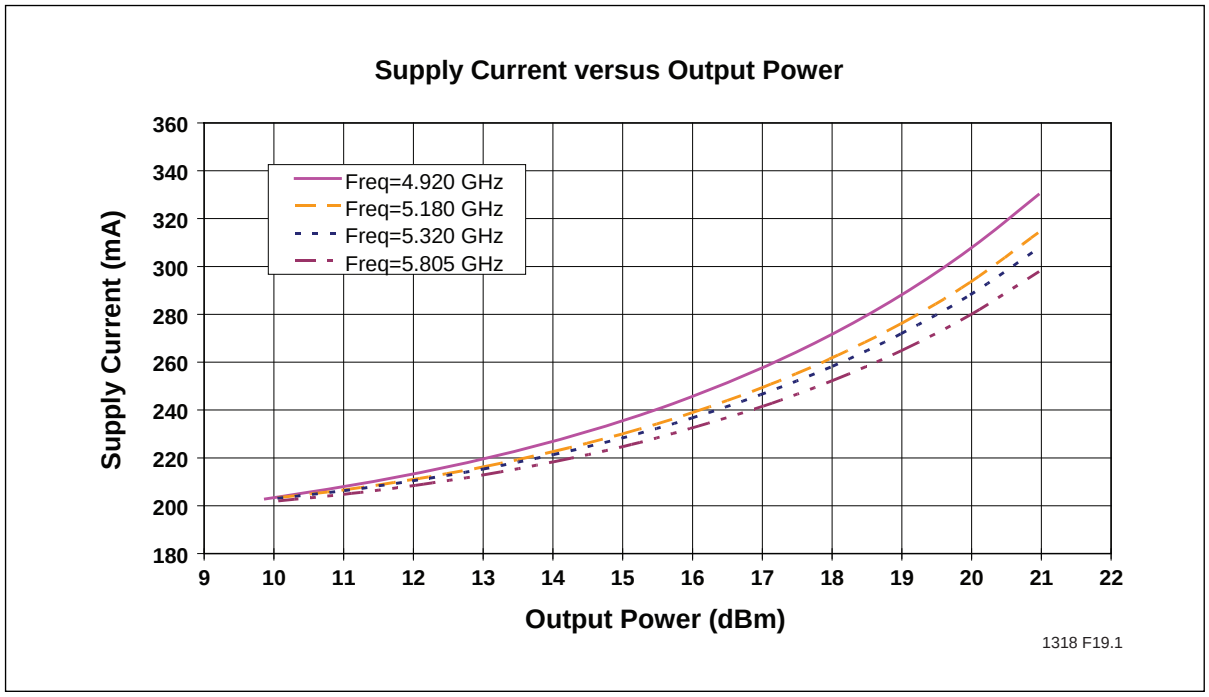

Figure 15: High Band Supply Current versus Output Power

Microchip Proprietary Information

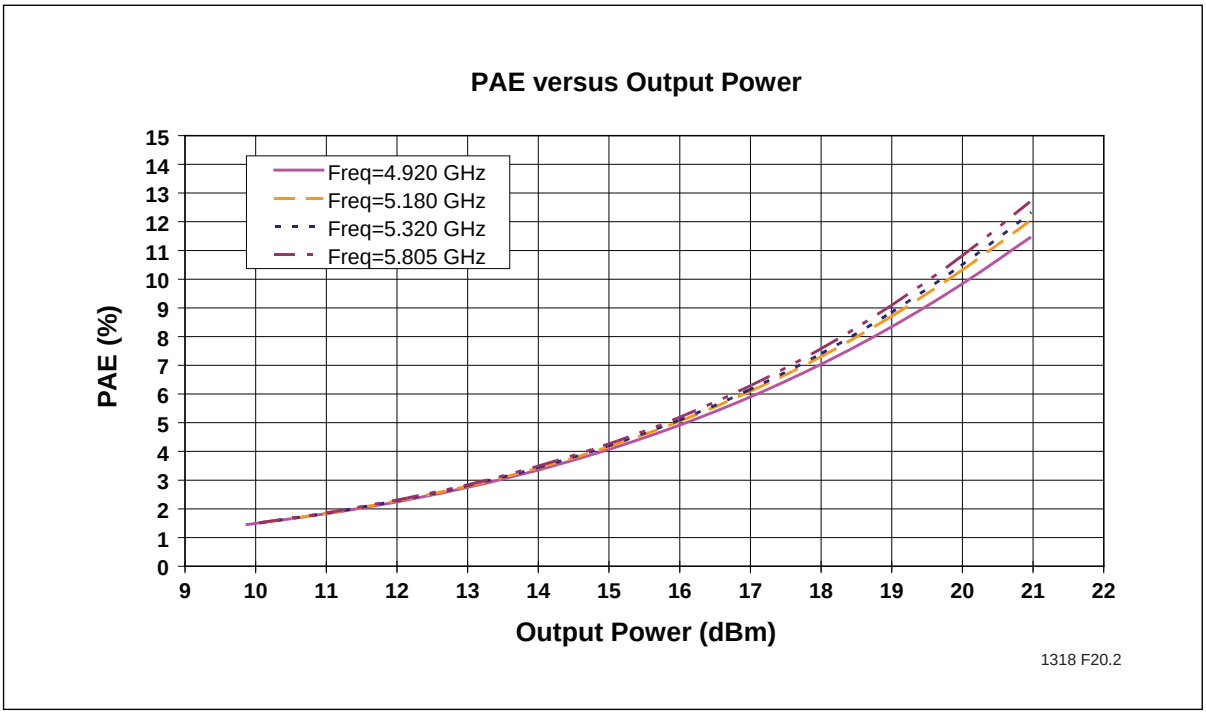

Figure 16: High Band PAE versus Output Power

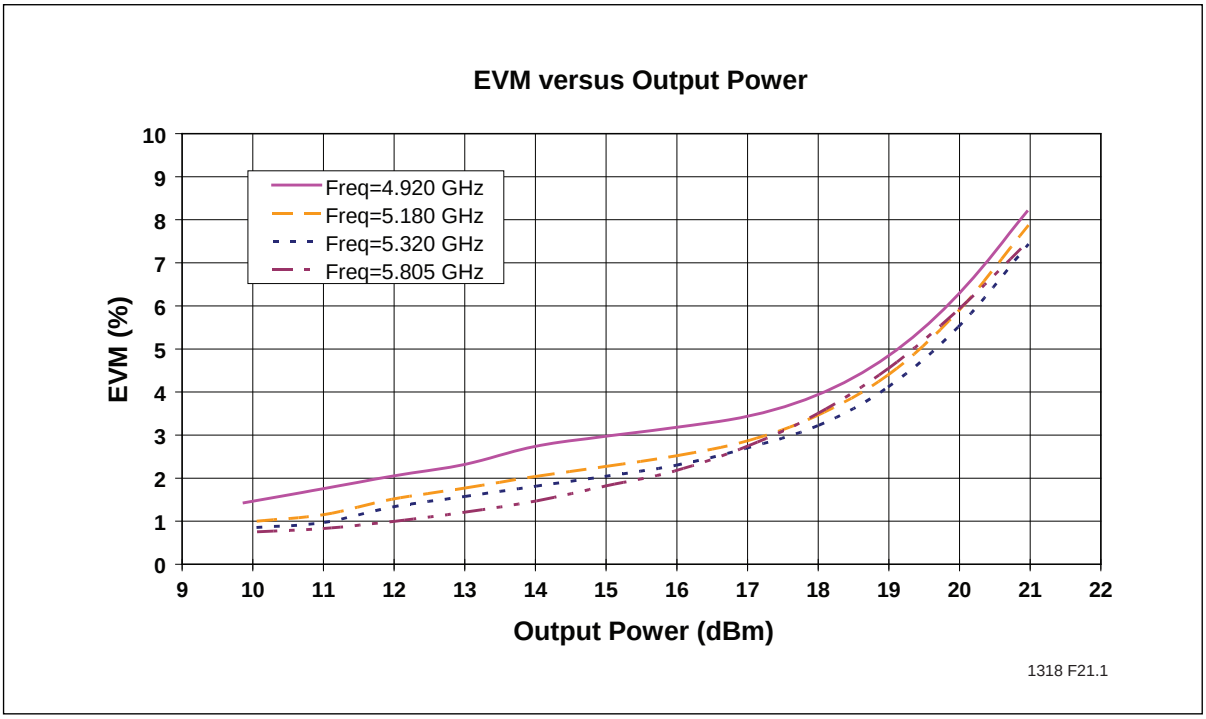

Figure 17: High Band EVM versus Output Power, Measured with Sequence-plus-data Equalizer Training

Microchip Proprietary Information

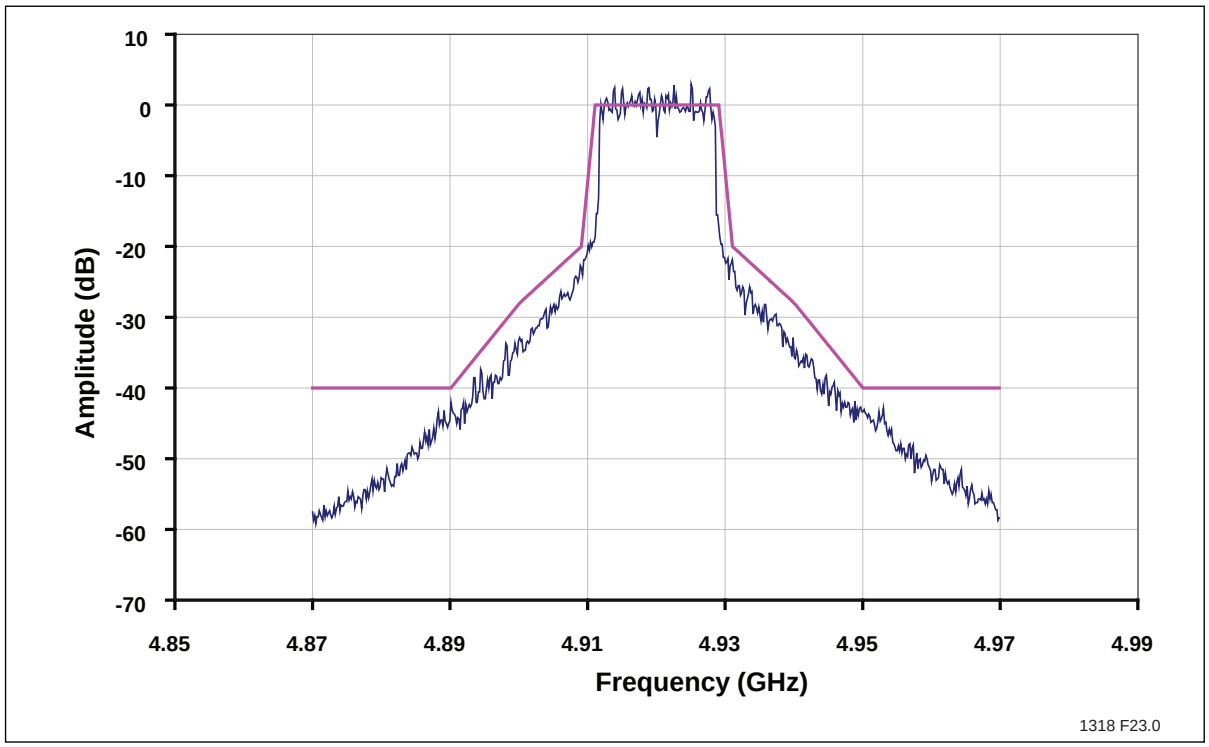

Figure 18: High Band 802.11a Spectrum Mask at 4.92 GHz at Output Power 22.5 dBm with DC Current at 370 mA

Microchip Proprietary Information

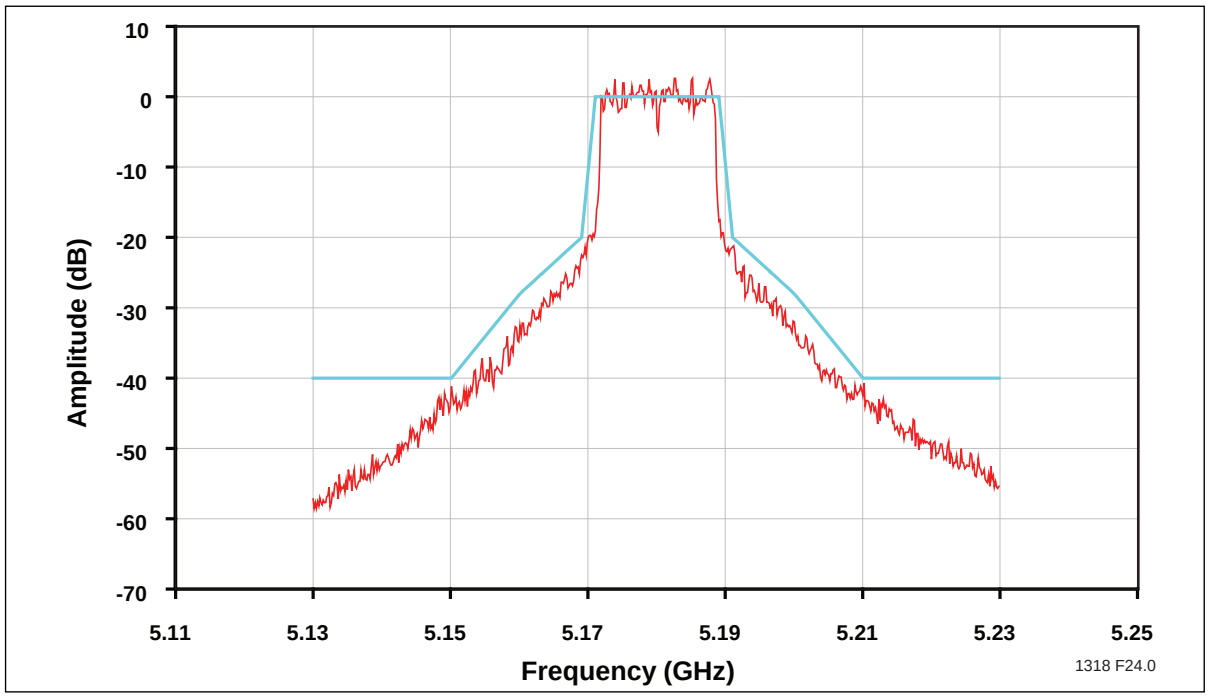

Figure 19: High Band 802.11a Spectrum Mask at 5.18 GHz at Output Power 22.5 dBm with DC Current at 355 mA

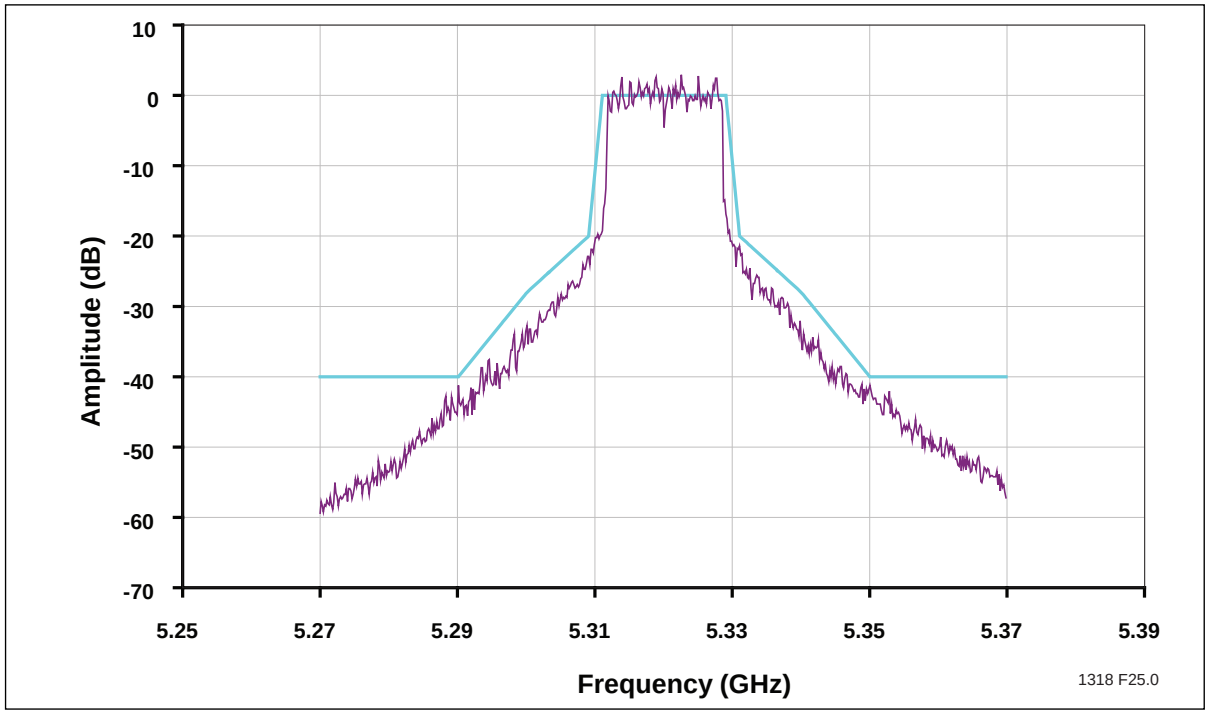

Figure 20: High Band 802.11a Spectrum Mask at 5.32 GHz at Output Power 23 dBm with DC Current at 360 mA

©2012 Silicon Storage Technology, Inc.

Microchip Proprietary Information

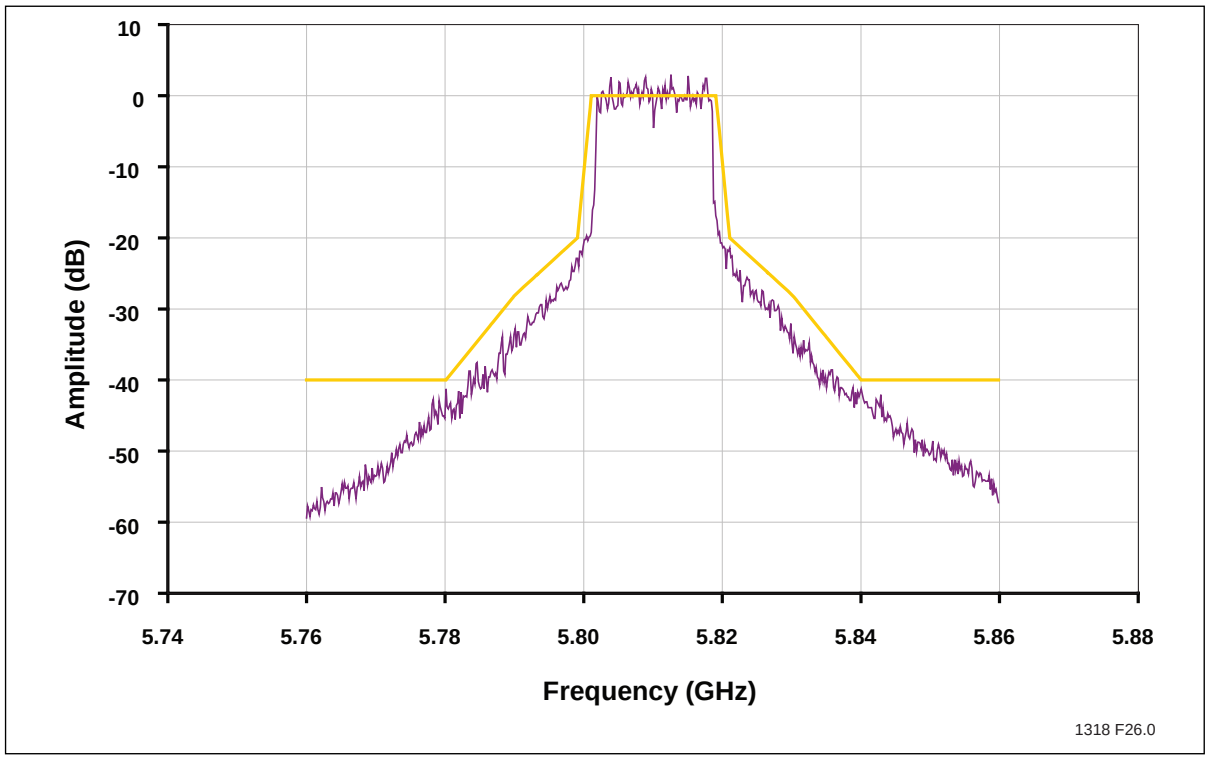

Figure 21: High Band 802.11a Spectrum Mask at 5.805 GHz at Output Power 23 dBm with DC Current at 350 mA

Microchip Proprietary Information

High Band Power Detector Characteristics

Test Conditions: V_{CC} = 3.3V, V_{REF} = 2.95V, T_A = 25°C, 54 Mbps 802.11a OFDM Signal

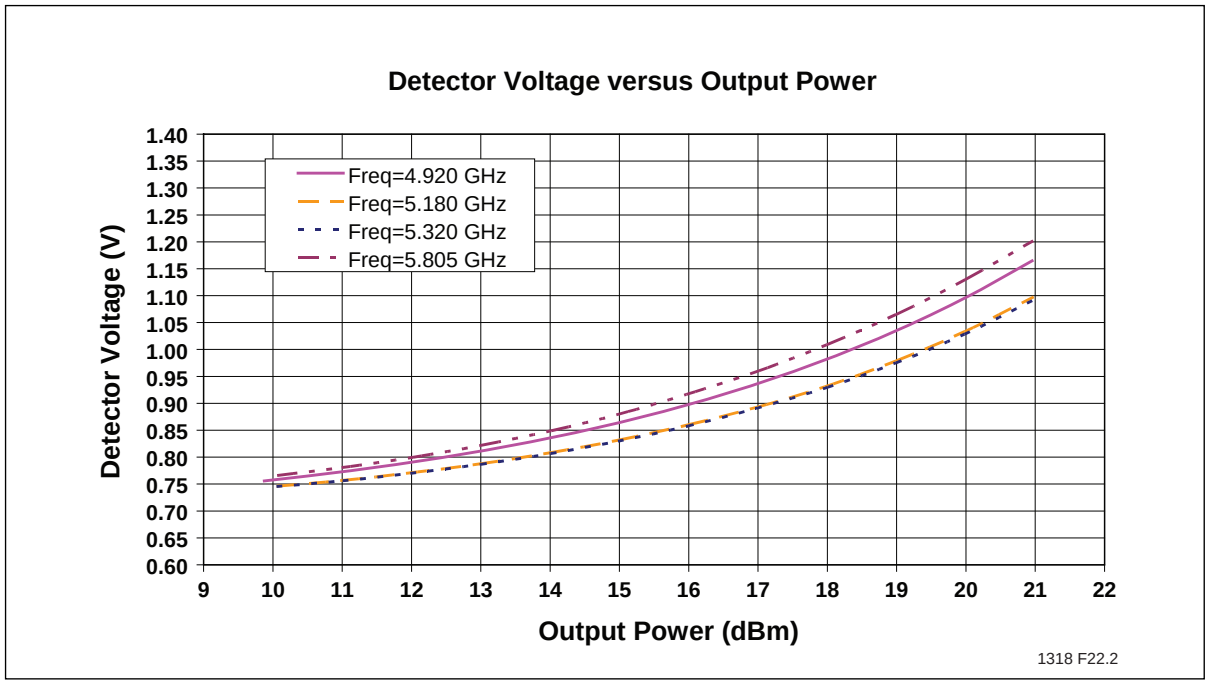

Figure 22: High Band Detector Voltage versus Output Power

Microchip Proprietary Information

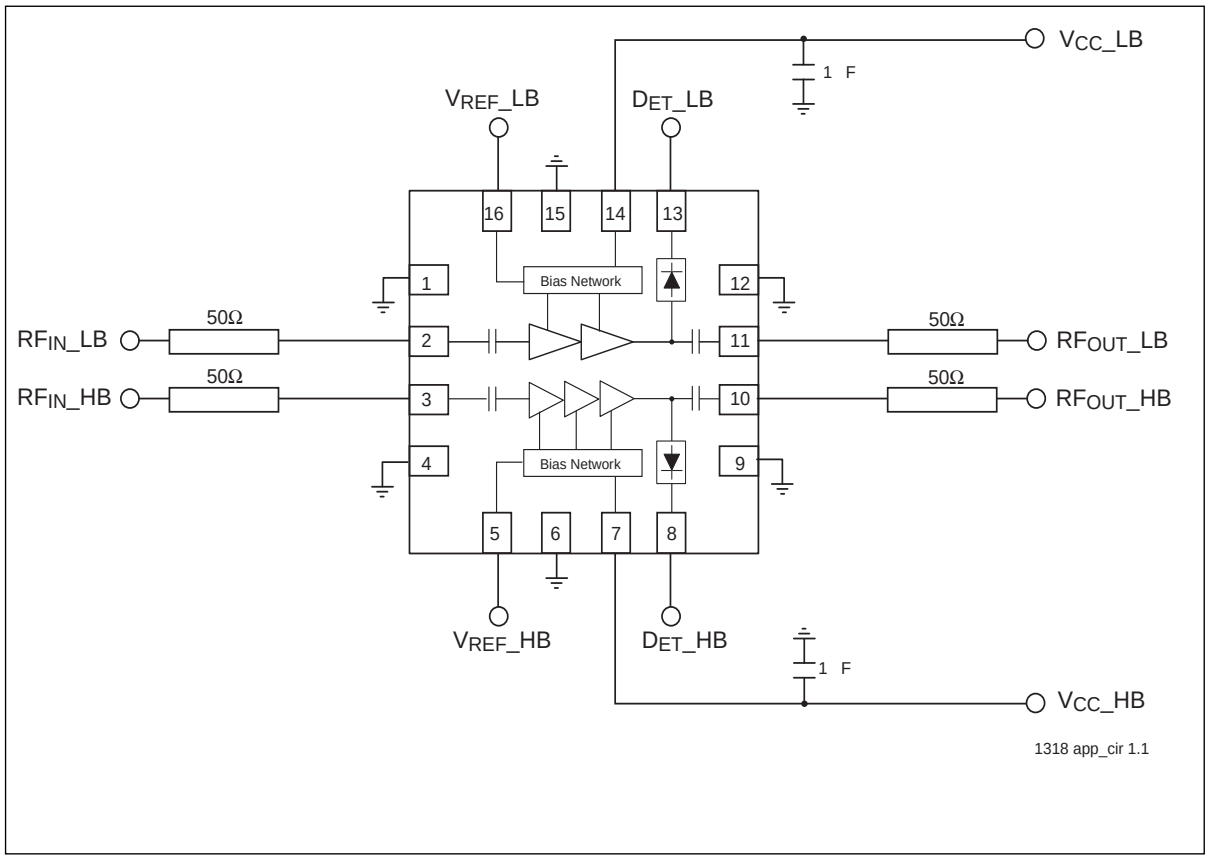

Figure 23: Typical Application Circuit

Microchip Proprietary Information

Product Ordering Information

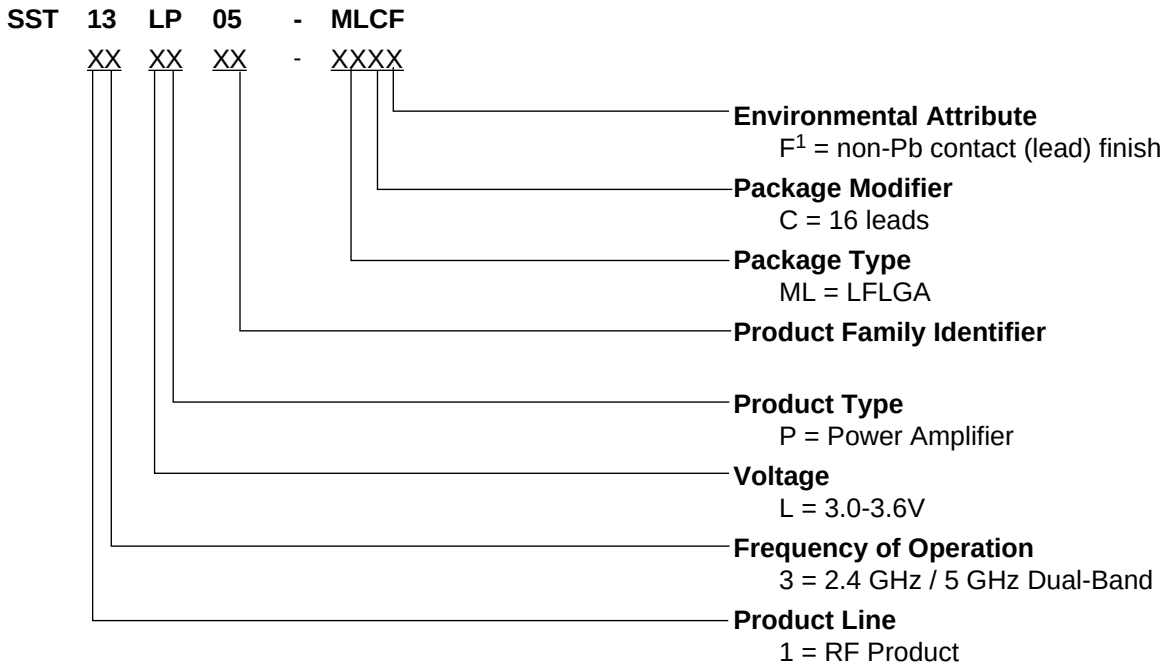

1. Environmental suffix “F” denotes non-Pb solder. SST non-Pb solder devices are “RoHS Compliant”.

Valid combinations for SST13LP05

SST13LP05-MLCF

SST13LP05 Evaluation Kits

SST13LP05-MLCF-K

Note: Consult your SST sales representative to confirm availability of valid combinations.

Microchip Proprietary Information

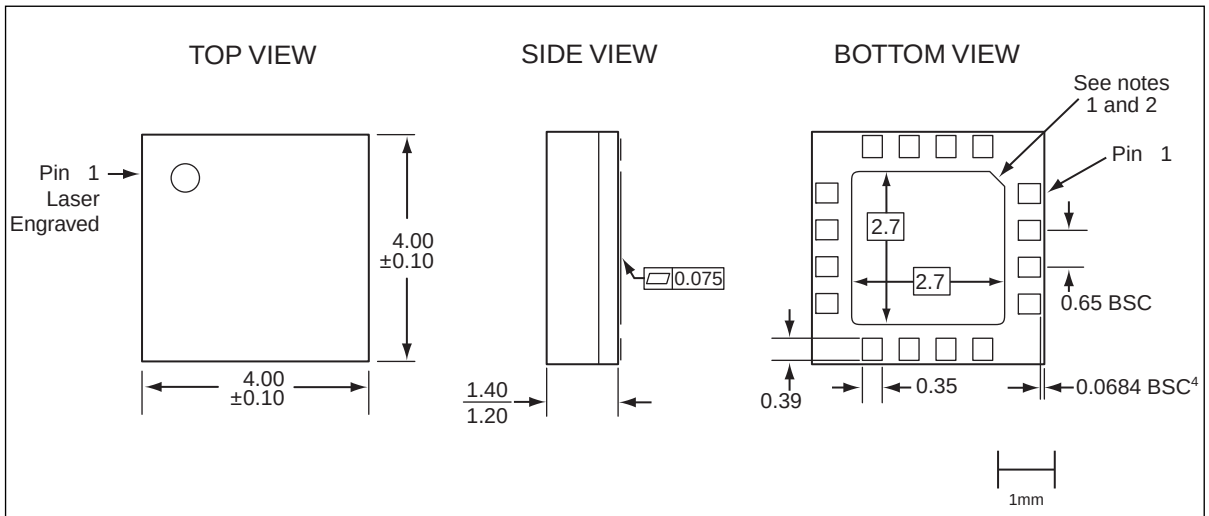

Note: 1. From the bottom view, the pin 1 indicator may be either a 45-degree chamfer or a half-circle notch.
2. The external paddle is electrically connected to the die back-side and should be soldered to the VSS of the PC board. Connection of this paddle to any other voltage potential will result in shorts and/or electrical malfunction of the device.
3. Untoleranced dimensions are nominal target values.
4. Land set back from body edge applies to all lands of package.
5. All linear dimensions are in millimeters (max/min).

16-LGA-4x4-MLC-0.0

Figure 24: 16-Contact Low-profile, Fine-pitch, Land Grid Array (LFLGA)
SST Package Code: MLC

Microchip Proprietary Information

Table 6: Revision History

Revision	Description	Date
00	• Initial release of data sheet.	Dec 2006
01	• Updated document status from Preliminary Specification to Data Sheet	Apr 2008
02	• Updated “Contact Information” on page 24.	Feb 2009
A	• Applied new document format • Released document under letter revision system • Updated Spec number from S71318 to DS75032	Oct 2012

ISBN:978-1-61341-700-3

© 2012 Silicon Storage Technology, Inc–a Microchip Technology Company. All rights reserved.

SST, Silicon Storage Technology, the SST logo, SuperFlash, MTP, and FlashFlex are registered trademarks of Silicon Storage Technology, Inc. MPF, SQI, Serial Quad I/O, and Z-Scale are trademarks of Silicon Storage Technology, Inc. All other trademarks and registered trademarks mentioned herein are the property of their respective owners.

Specifications are subject to change without notice. Refer to www.microchip.com for the most recent documentation. For the most current package drawings, please see the Packaging Specification located at http://www.microchip.com/packaging.

Memory sizes denote raw storage capacity; actual usable capacity may be less.

SST makes no warranty for the use of its products other than those expressly contained in the Standard Terms and Conditions of Sale.

For sales office locations and information, please see www.microchip.com.

Silicon Storage Technology, Inc.
A Microchip Technology Company
www.microchip.com

Microchip Proprietary Information