A Microchip Technology Company

2.4 GHz High-Power, High-Gain Power Amplifier
SST12LP14C

Data Sheet

The SST12LP14C is a versatile power amplifier based on the highly-reliable InGaP/GaAs HBT technology.Easily configured for high-power applications with good power-added efficiency, it typically provides 32 dB gain with 29% PAE @ POUT = 23 dBm for 802.11g and 29% PAE @ POUT = 23.5 dBm for 802.11b. This power amplifier has excellent linearity while meeting 802.11g spectrum mask up to 23 dBm. The SST12LP14C also features easy board-level usage along with high-speed power-up/-down control through a single combined reference voltage pin. The SST12LP14C has an excellent on-chip and single ended power detector, and is offered in 16-contact VQFN package.

Features

- **High Gain:**
  - Typically 32 dB gain across 2.4~2.5 GHz over temperature 0°C to +85°C
- **High linear output power:**
  - >26 dBm P1dB
    - Please refer to “Absolute Maximum Stress Ratings” on page 5
  - Meets 802.11g OFDM ACPR requirement up to 23 dBm
  - ~4% added EVM up to 20 dBm for 54 Mbps 802.11g signal
  - Meets 802.11b ACPR requirement up to 23.5 dBm
- **High power-added efficiency/Low operating current for both 802.11b/g applications**
  - ~29%/205 mA @ P_{OUT} = 23 dBm for 802.11g
  - ~29%/230 mA @ P_{OUT} = 23.5 dBm for 802.11b
- **Single-pin low I_{REF} power-up/-down control**
  - I_{REF} <2 mA
- **Low idle current**
  - ~100 mA I_{CQ}
- **High-speed power-up/-down**
  - Turn on/off time (10%- 90%) <100 ns
  - Typical power-up/-down delay with driver delay included <200 ns
- **High temperature stability**
  - ~1 dB power variation between 0°C to +85°C
- **Low shut-down current (< 0.1 µA)**
- **Excellent On-chip power detection**
  - <+/- 0.5dB variation between 0°C to +85°C
  - <+/- 0.3dB variation Ch1 through Ch14
- **20 dB dynamic range on-chip power detection**
- **Simple input/output matching**
- **Packages available**
  - 16-contact VQFN – 3mm x 3mm
- **All non-Pb (lead-free) devices are RoHS compliant**

Applications

- **WLAN (IEEE 802.11b/g)**
- **Home RF**
- **Cordless phones**
- **2.4 GHz ISM wireless equipment**

Product Description

The SST12LP14C is a versatile power amplifier based on the highly-reliable InGaP/GaAs HBT technology.

The SST12LP14C can be easily configured for high-power applications with good power-added efficiency (PAE) while operating over the 2.4- 2.5 GHz frequency band. It typically provides 32 dB gain with 29% PAE @ P_{OUT} = 23 dBm for 802.11g and 29% PAE @ P_{OUT} = 23.5 dBm for 802.11b.

This power amplifier has excellent linearity, typically ~4% added EVM at 20 dBm output power. This is essential for 54 Mbps 802.11g operation while meeting 802.11g spectrum mask up to 23 dBm. The SST12LP14C can be configured for applications with an added EVM of ~3%, up to 21 dBm with 19% PAE over the 960-1060 MHz frequency bands. This configuration meets the 802.11g spectrum mask up to 24 dBm with 28% PAE and the 802.11b spectrum mask up to 25 dBm with 31% PAE.[1]

The SST12LP14C also features easy board-level usage along with high-speed power-up/-down control through a single combined reference voltage pin. Ultra-low reference current (total I_{REF} ~2 mA) makes the SST12LP14C controllable by an on/off switching signal directly from the baseband chip. These features coupled with low operating current make this device ideal for the final stage power amplification in battery-powered 802.11b/g WLAN transmitter applications.

This power amplifier has an excellent on-chip and single-ended power detector, which features a wide range (>15 dB) with dB-wise linearization and high stability over temperature (+/-0.5 dB 0°C to +85°C), and over frequency (<+/-0.3 dB across Channels 1 through 14). The on-chip power detector provides a reliable solution to board-level power control.

The SST12LP14C is offered in 16-contact VQFN package. See Figure 2 for pin assignments and Table 1 for pin descriptions.

1. For more information on performance and reference design, see the SST12LP14C application note.

©2011 Silicon Storage Technology, Inc.

Functional Blocks

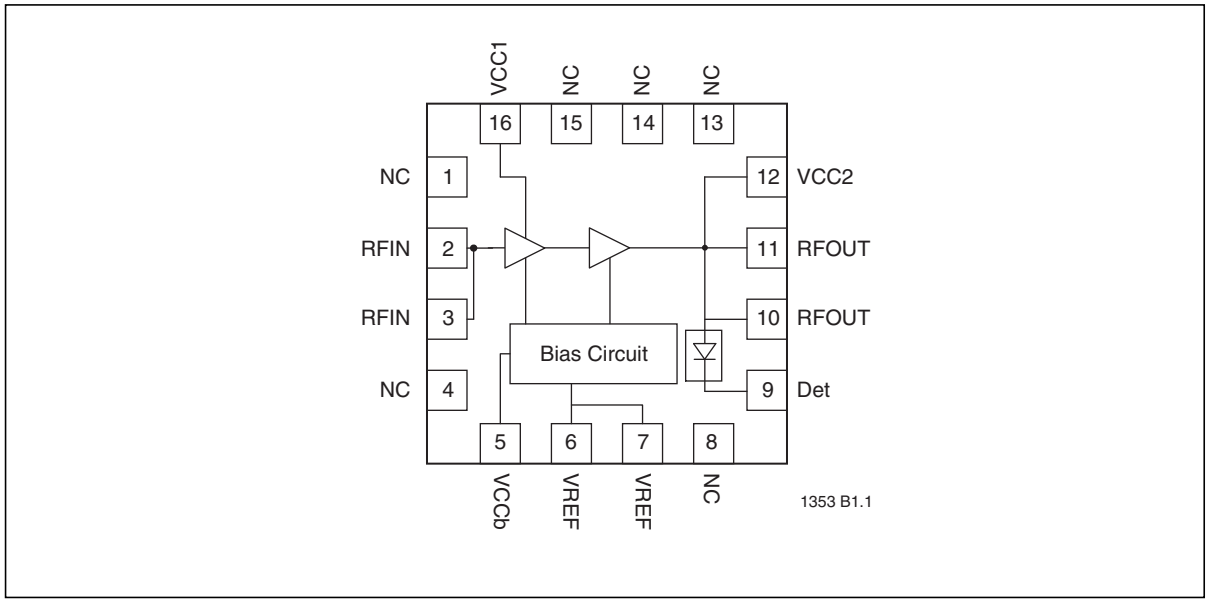

Figure 1: Functional Block Diagram

Pin Assignments

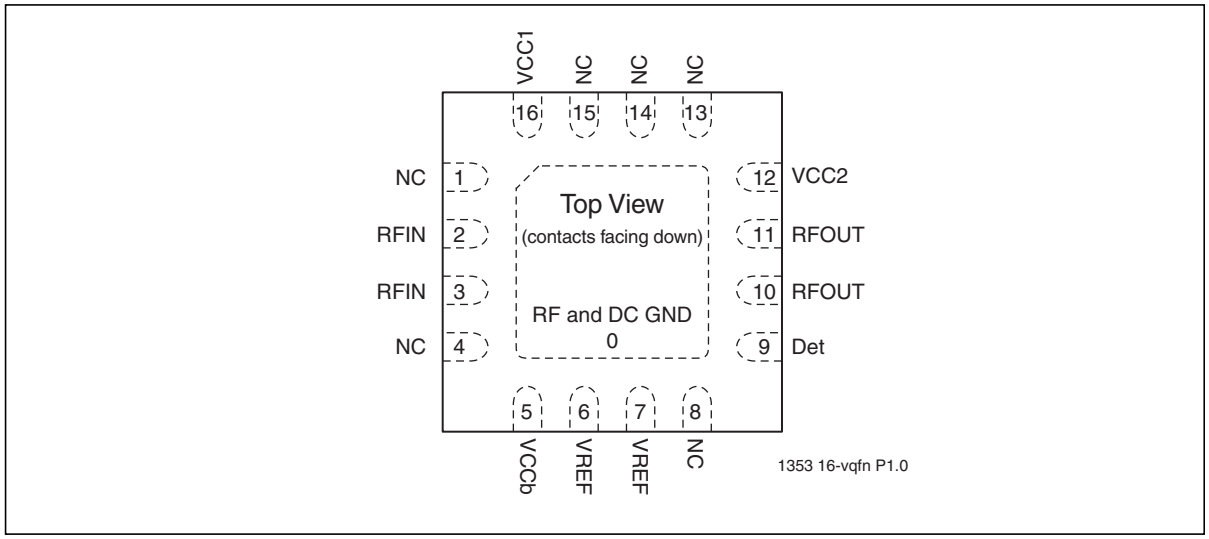

Figure 2: Pin Assignments for 16-contact VQFN

Pin Descriptions

Table 1: Pin Description

Symbol	Pin No.	Pin Name	Type[1]	Function
GND	0	Ground		The center pad should be connected to RF ground with several low inductance, low resistance vias
NC	1	No Connection		Unconnected pin
RFIN	2		I	RF input
RFIN	3		I	RF input
NC	4	No Connection		Unconnected pin
VCCb	5	Power Supply	PWR	Supply voltage for bias circuit
VREF	6		PWR	1st and 2nd stage idle current control
VREF	7		PWR	1st and 2nd stage idle current control
NC	8	No Connection		Unconnected pin
Det	9		O	On-chip power detector
RFOUT	10		O	RF output
RFOUT	11		O	RF output
VCC2	12	Power Supply	PWR	Power supply, 2nd stage
NC	13	No Connection		Unconnected pin
NC	14	No Connection		Unconnected pin
NC	15	No Connection		Unconnected pin
VCC1	16	Power Supply	PWR	Power supply, 1st stage

T1.0 75034

1. I=Input, O=Output

Electrical Specifications

The AC and DC specifications for the power amplifier interface signals. Refer to Table 3 for the DC voltage and current specifications. Refer to Figures 3 through Figure 12 for the RF performance.

Absolute Maximum Stress Ratings (Applied conditions greater than those listed under "Absolute Maximum Stress Ratings" may cause permanent damage to the device. This is a stress rating only and functional operation of the device at these conditions or conditions greater than those defined in the operational sections of this data sheet is not implied. Exposure to absolute maximum stress rating conditions may affect device reliability.)

Input power to pins 2 and 3 (P_{IN}) . . . . . +5 dBm
Average output power (P_{OUT})[1] . . . . . +26 dBm
Supply Voltage at pins 5, 12, and 16 (V_{CC}) . . . . . -0.3V to +4.6V
Reference voltage to pins 6 and 7 (V_{REF}) . . . . . -0.3V to +3.3V
DC supply current (I_{CC}) . . . . . 400 mA
Operating Temperature (T_A) . . . . . -40°C to +85°C
Storage Temperature (T_{STG}) . . . . . -40°C to +120°C
Maximum Junction Temperature (T_J) . . . . . +150°C
Surface Mount Solder Reflow Temperature . . . . . 260°C for 10 seconds

1. Never measure with CW source. Pulsed single-tone source with <50% duty cycle is recommended. Exceeding the maximum rating of average output power could cause permanent damage to the device.

Table 2: Operating Range

Range	Ambient Temp	V_{CC}
Industrial	-40°C to +85°C	3.3V

T2.1 75034

Table 3: DC Electrical Characteristics

Symbol	Parameter	Min.	Typ	Max.	Unit	Test Conditions
V_{CC}	Supply Voltage at pins 5, 12, 16	3.0	3.3	4.2	V	
I_{CC}	Supply Current					
	for 802.11g, 23 dBm		205		mA	
	for 802.11b, 23.5 dBm		230		mA	
I_{CQ}	Idle current for 802.11g to meet EVM<4% @ 20 dBm		100		mA	
I_{OFF}	Shut down current			0.1	µA	
V_{REG}	Reference Voltage for, with 30Ω resistor		2.85	2.95	V	

T3.2 75034

©2011 Silicon Storage Technology, Inc.

Table 4: AC Electrical Characteristics for Configuration

Symbol	Parameter	Min.	Typ	Max.	Unit
F_{L-U}	Frequency range	2400		2485	MHz
P_{OUT}	Output power				
	@ PIN = -9 dBm 11b signals	22			dBm
	@ PIN = -11 dBm 11g signals	20			dBm
G	Small signal gain	31	32		dB
G_{VAR1}	Gain variation over band (2400~2485 MHz)			±0.5	dB
G_{VAR2}	Gain ripple over channel (20 MHz)		0.2		dB
ACPR	Meet 11b spectrum mask	23	23.5		dBm
	Meet 11g OFDM 54 Mbps spectrum mask	22	23		dBm
Added EVM	@ 20 dBm output with 11g OFDM 54 Mbps signal		4		%
2f, 3f, 4f, 5f	Harmonics at 22 dBm, without external filters			-48	dBc

T4.3 75034

©2011 Silicon Storage Technology, Inc.

Typical Performance Characteristics

Test Conditions: V_{CC} = 3.3V, T_A = 25°C, unless otherwise specified

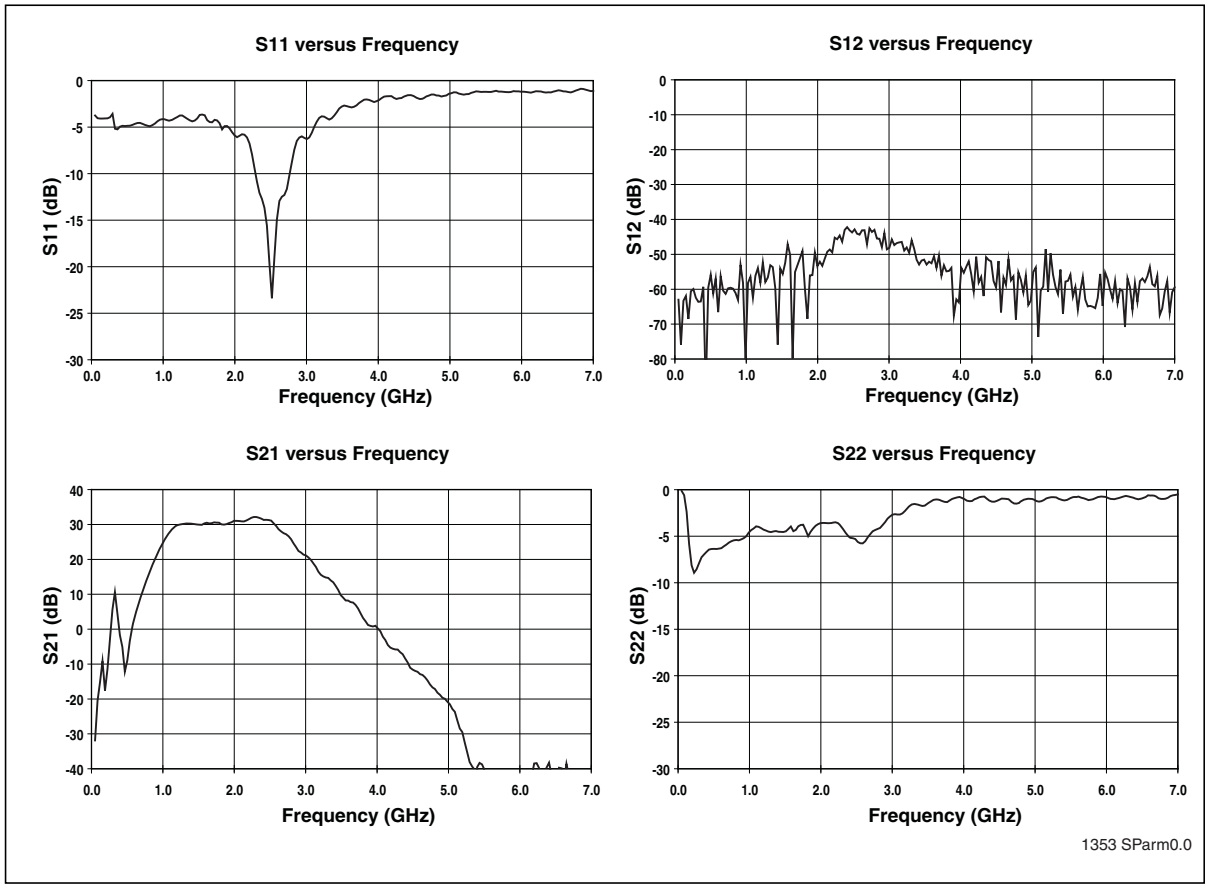

Figure 3: S-Parameters

Typical Performance Characteristics

Test Conditions: V_{CC} = 3.3V, T_A = 25°C, 54 Mbps 802.11g OFDM signal

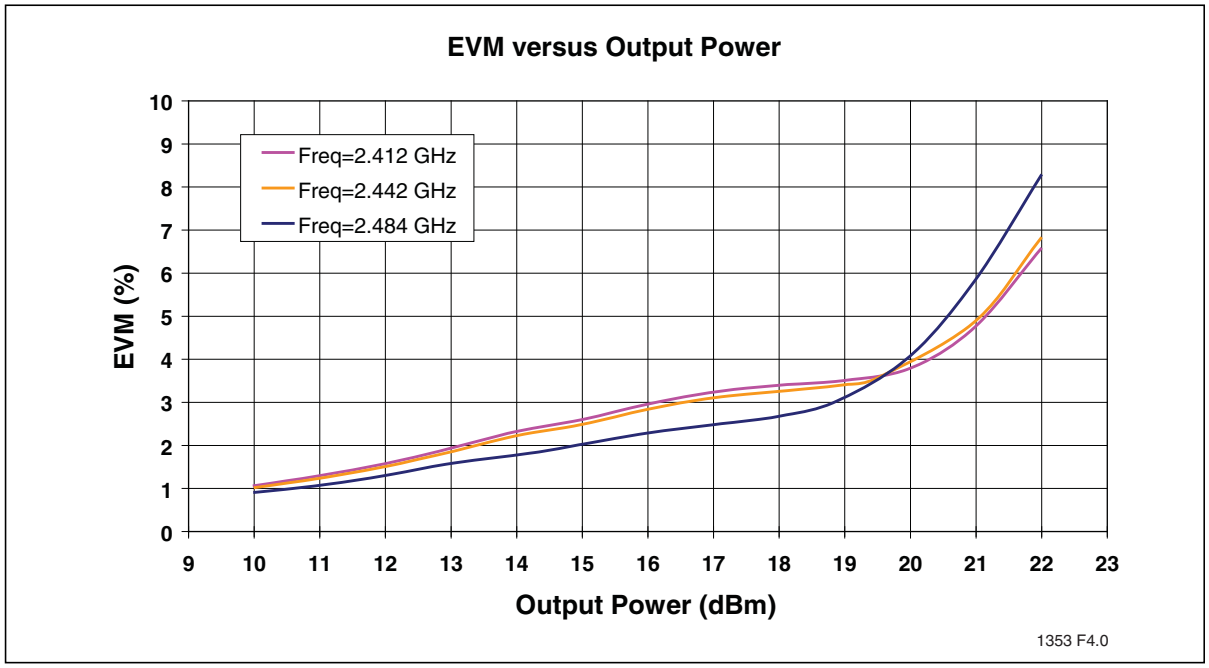

Figure 4: EVM versus Output Power, measured with Equalizer Channel Estimation set to "sequence plus data"

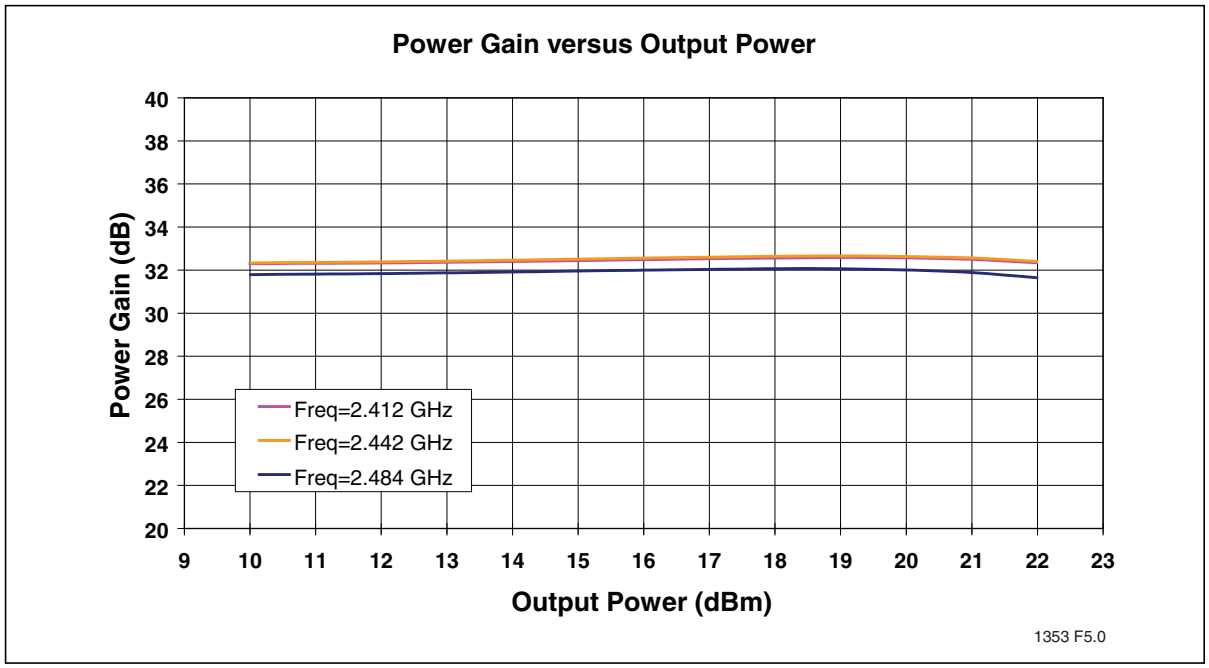

Figure 5: Power Gain versus Output Power

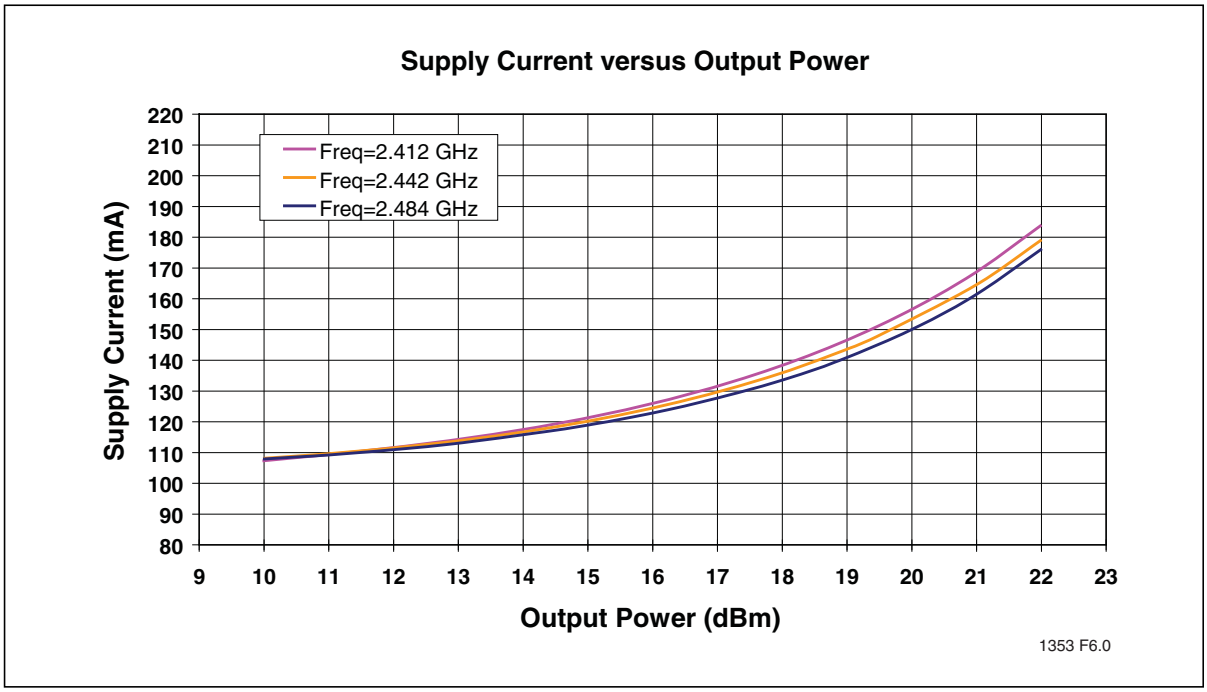

Figure 6: Total Current Consumption for 802.11g Operation versus Output Power

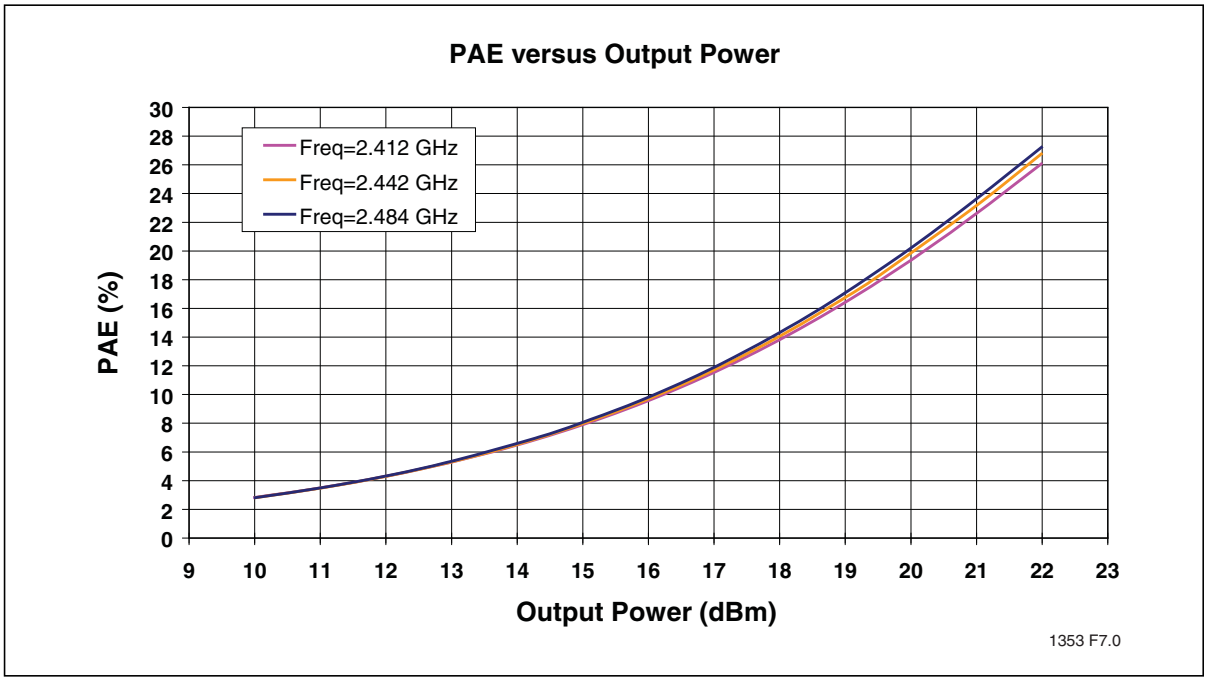

Figure 7: PAE versus Output Power

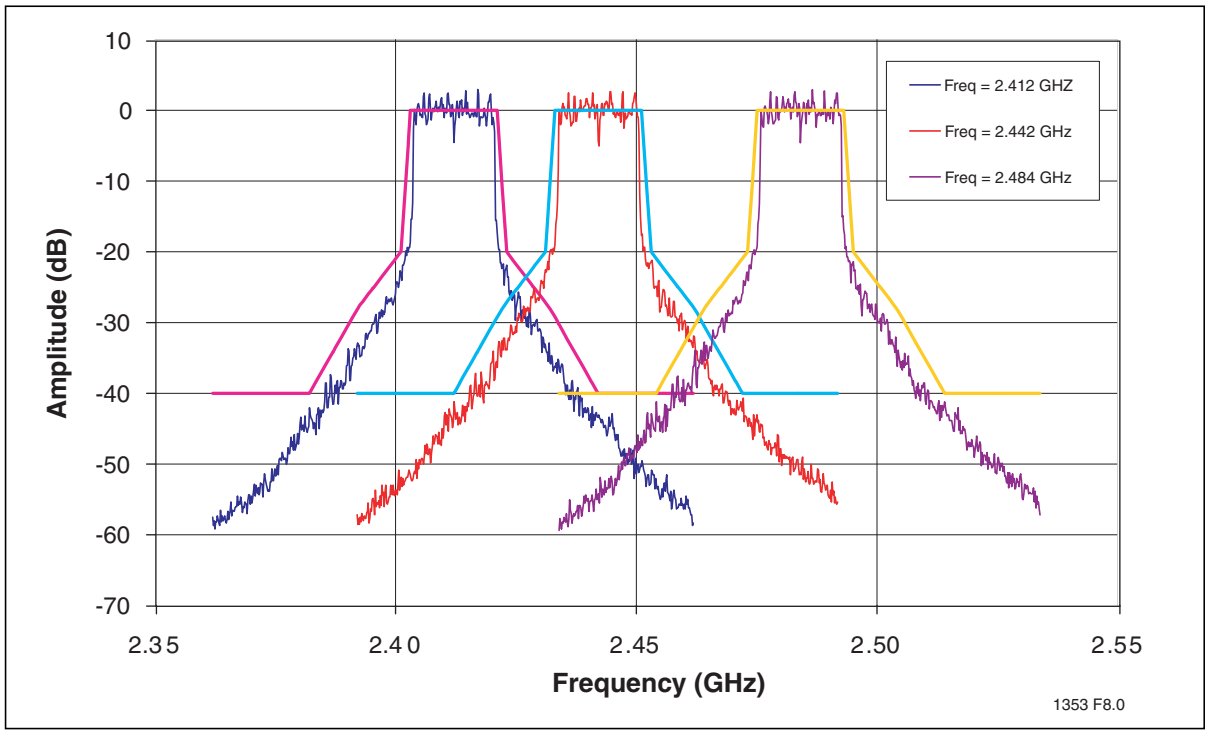

Figure 8: 802.11g Spectrum Mask at 23 dBm

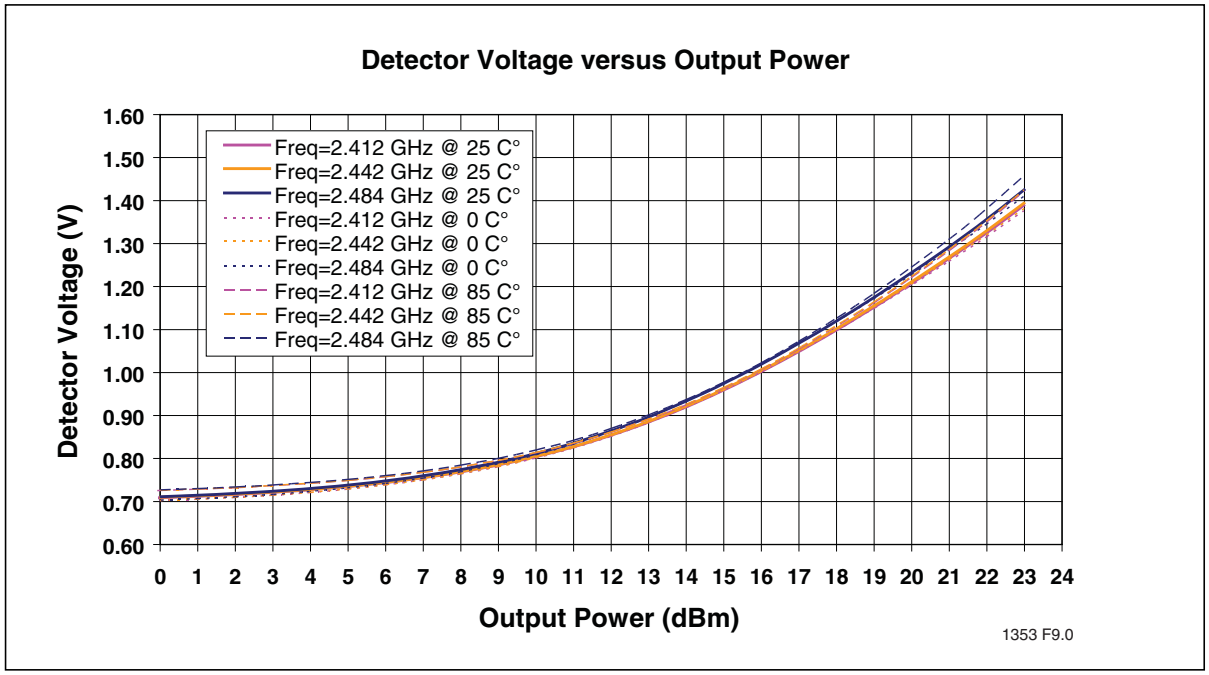

Figure 9: Detector Characteristics over Temperature and over Frequency

©2011 Silicon Storage Technology, Inc.

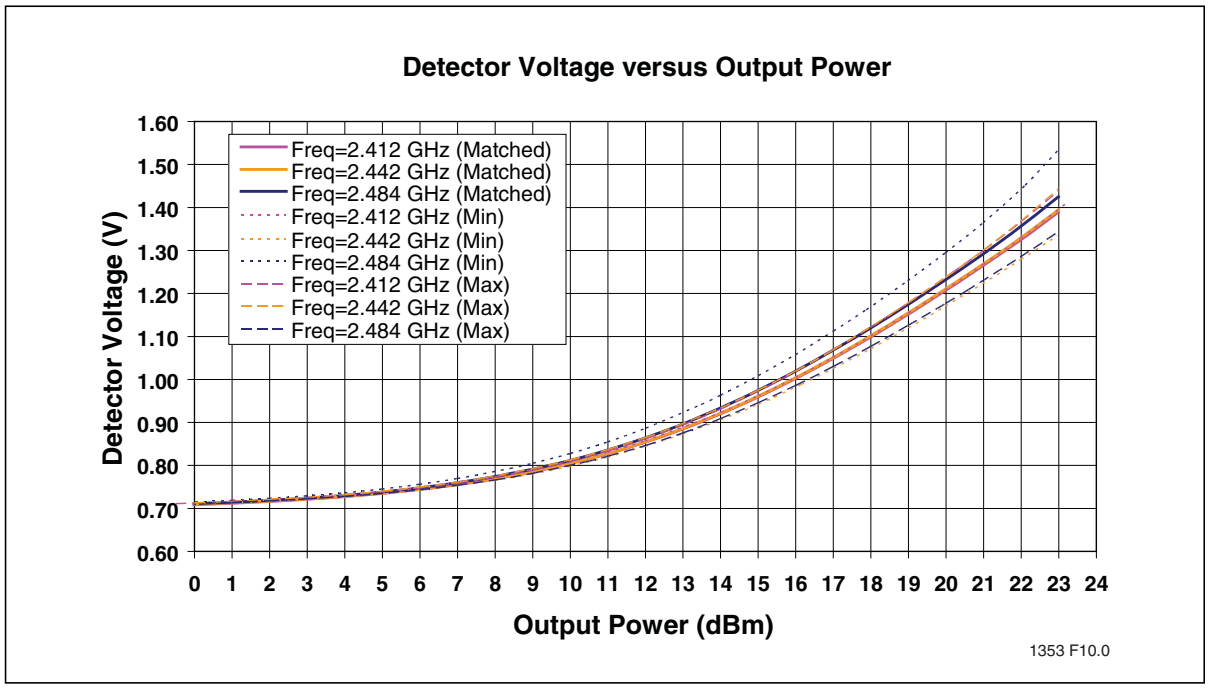

Figure 10: Detector Characteristics over Frequency with 2:1 Output VSWR All Phases

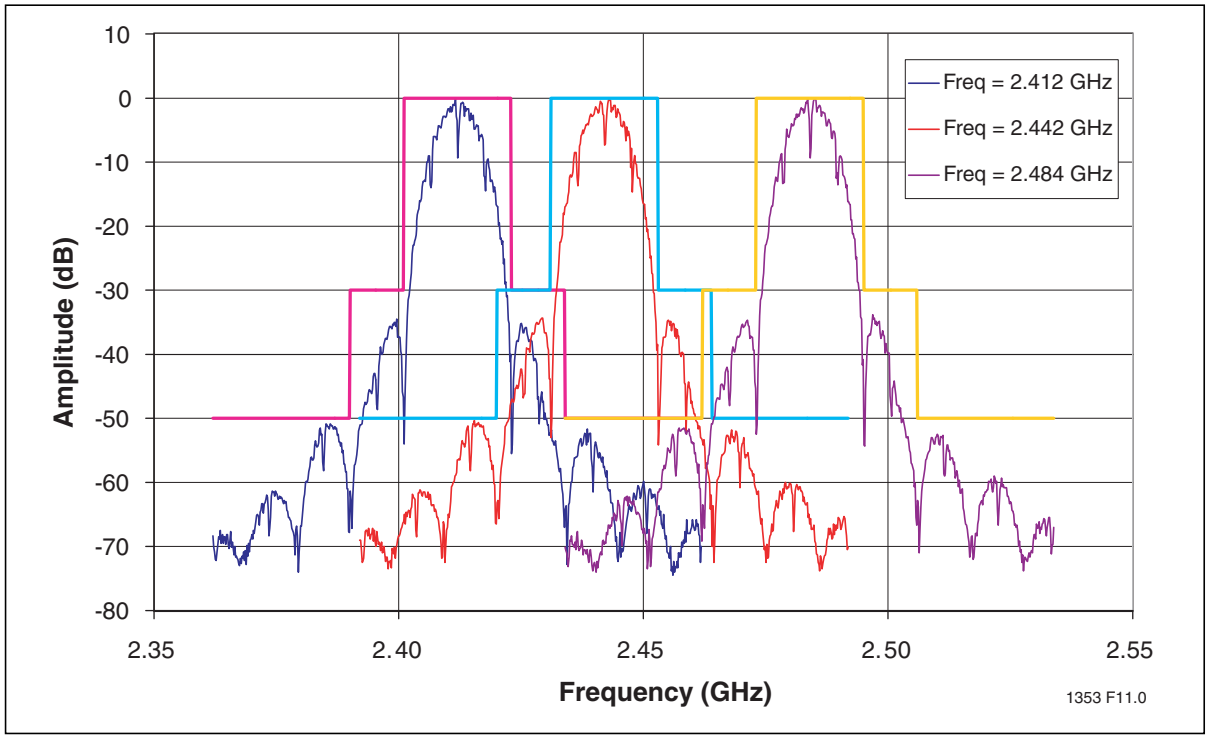

Figure 11: 802.11b Spectrum Mast at 23.5 dBm

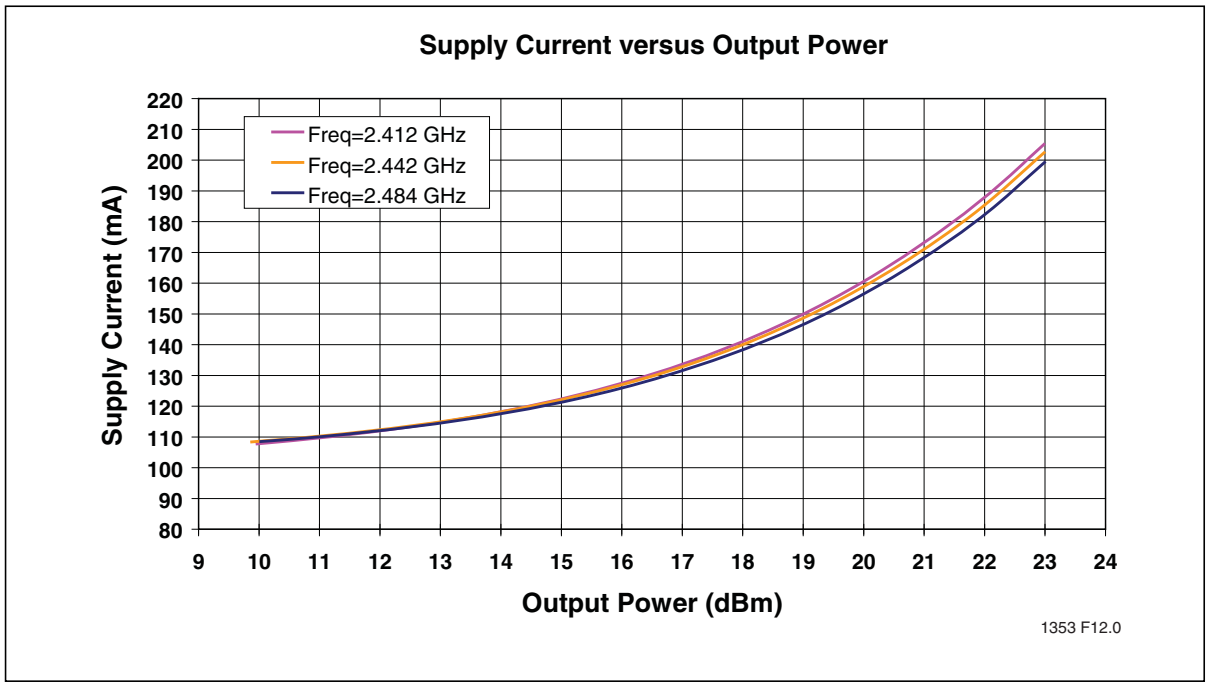

Figure 12: Total Current Consumption for 802.11b Operation versus Output Power

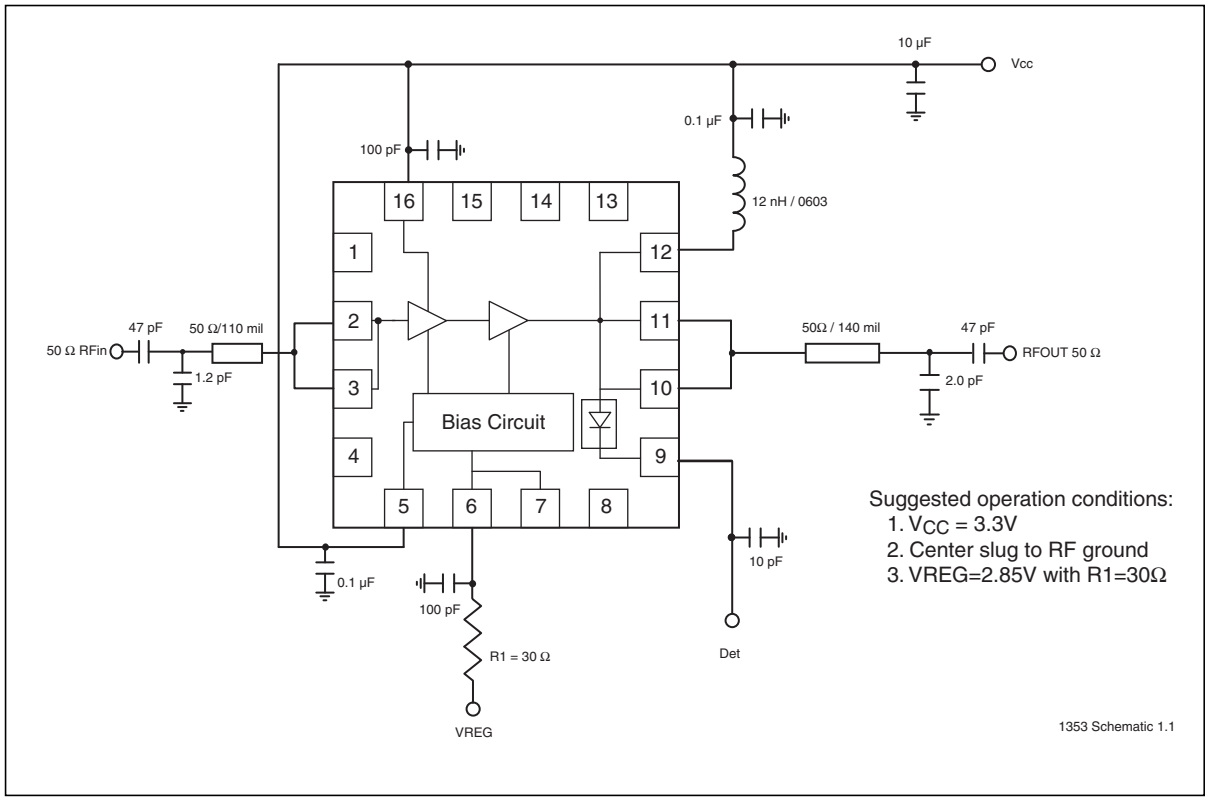

Figure 13: Typical Schematic for High-Power/High-Efficiency 802.11b/g Applications

Product Ordering Information

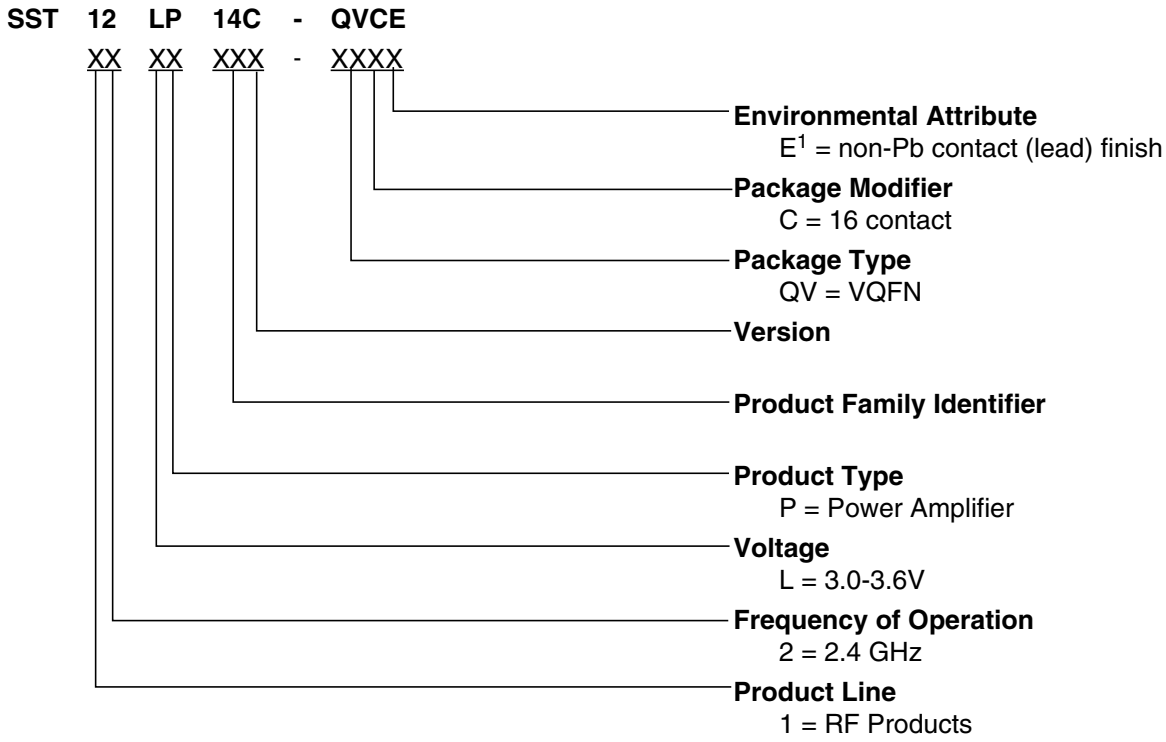

1. Environmental suffix “E” denotes non-Pb solder. SST non-Pb solder devices are “RoHS Compliant”.

Valid combinations for SST12LP14C

SST12LP14C-QVCE

SST12LP14C Evaluation Kits

SST12LP14C-QVCE-K

Note: Valid combinations are those products in mass production or will be in mass production. Consult your SST sales representative to confirm availability of valid combinations and to determine availability of new combinations.

©2011 Silicon Storage Technology, Inc.

Packaging Diagrams

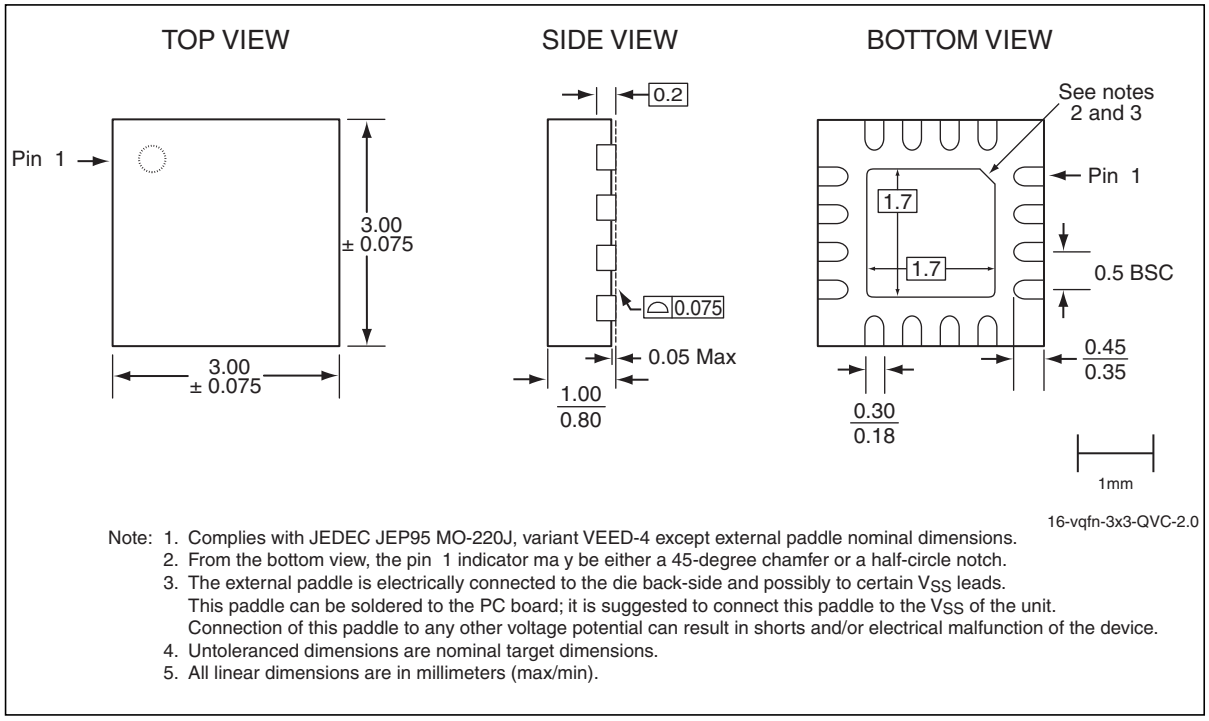

Note: 1. Complies with JEDEC JEP95 MO-220J, variant VEED-4 except external paddle nominal dimensions.
2. From the bottom view, the pin 1 indicator ma y be either a 45-degree chamfer or a half-circle notch.
3. The external paddle is electrically connected to the die back-side and possibly to certain V_{SS} leads. This paddle can be soldered to the PC board; it is suggested to connect this paddle to the V_{SS} of the unit. Connection of this paddle to any other voltage potential can result in shorts and/or electrical malfunction of the device.
4. Untoleranced dimensions are nominal target dimensions.
5. All linear dimensions are in millimeters (max/min).

Figure 14: 16-Contact Very-thin Quad Flat No-lead (VQFN)
SST Package Code: QVC

Table 5: Revision History

Revision	Description	Date
00	• Initial release of data sheet	Feb 2007
01	• Updated “Features” and “Product Description” on page 2 • Revised Table 3 on page 5 and Table 4 on page 6 • Updated the figure caption of Table 11 on page 11	Oct 2007
02	• Updated document status from Preliminary Specification to Data Sheet	Apr 2008
03	• Updated “Contact Information” on page 14	Mar 2009
A	• Applied new document format • Released document under letter revision system • Updated spec number from S71353 to DS75034 • Updated Supply voltage range in “Electrical Specifications” on page 5	Dec 2011

ISBN:978-1-61341-894-9

© 2011 Silicon Storage Technology, Inc–a Microchip Technology Company. All rights reserved.

SST, Silicon Storage Technology, the SST logo, SuperFlash, MTP, and FlashFlex are registered trademarks of Silicon Storage Technology, Inc. MPF, SQI, Serial Quad I/O, and Z-Scale are trademarks of Silicon Storage Technology, Inc. All other trademarks and registered trademarks mentioned herein are the property of their respective owners.

Specifications are subject to change without notice. Refer to www.microchip.com for the most recent documentation. For the most current package drawings, please see the Packaging Specification located at http://www.microchip.com/packaging.

Memory sizes denote raw storage capacity; actual usable capacity may be less.

SST makes no warranty for the use of its products other than those expressly contained in the Standard Terms and Conditions of Sale.

For sales office locations and information, please see www.microchip.com.

Silicon Storage Technology, Inc.
A Microchip Technology Company
www.microchip.com