A Microchip Technology Company

2.4 GHz Power Amplifier
SST12LP14

Data Sheet

The SST12LP14 is a high-performance power amplifier IC based on the highly-reliable InGaP/GaAs HBT technology. Easily configured for high-power, high-efficiency applications with superb power-added efficiency, it typically provides 30 dB gain with 22% power added efficiency. The SST12LP14 has excellent linearity while meeting 802.11g spectrum mask at 23 dBm.It is ideal for the final stage power amplification in battery-powered 802.11g/b WLAN transmitter applications, and is offered in 16-contact VQFN package.

Features

- **High Gain:**
  - Typically 30 dB gain across 2.4~2.5 GHz over temperature 0°C to +80°C
- **High linear output power:**
  - >26.5 dBm P1dB
  - Meets 802.11g OFDM ACPR requirement up to 23 dBm
  - Added EVM ~4% up to 20 dBm for 54 Mbps 802.11g signal
  - Meets 802.11b ACPR requirement up to 24 dBm
- **High power-added efficiency/Low operating current for both 802.11g/b applications**
  - ~22% @ P_{OUT} = 22 dBm for 802.11g
  - ~26% @ P_{OUT} = 23.5 dBm for 802.11b
- **Built-in Ultra-low I_{REF} power-up/down control**
  - I_{REF} <4 mA
- **Low idle current**
  - ~60 mA I_{CQ}
- **High-speed power-up/down**
  - Turn on/off time (10%~90%) <100 ns
  - Typical power-up/down delay with driver delay included <200 ns
- **High temperature stability**
  - ~1 dB gain/power variation between 0°C to +80°C
  - ~1 dB detector variation over 0°C to +80°C
- **Low shut-down current (< 0.1 µA)**
- **On-chip power detection**
- **25 dB dynamic range on-chip power detection**
- **Simple input/output matching**
- **Packages available**
  - 16-contact VQFN (3mm x 3mm)
  - Non-Pb (lead-free) packages available

Applications

- **WLAN (IEEE 802.11g/b)**
- **Home RF**
- **Cordless phones**
- **2.4 GHz ISM wireless equipment**

Product Description

The SST12LP14 is a high-performance power amplifier IC based on the highly-reliable InGaP/GaAs HBT technology.

The SST12LP14 can be easily configured for high-power, high-efficiency applications with superb power-added efficiency while operating over the 2.4~2.5 GHz frequency band. It typically provides 30 dB gain with 22% power-added efficiency @ P_{OUT} = 22 dBm for 802.11g and 27% power-added efficiency @ P_{OUT} = 24 dBm for 802.11b.

The SST12LP14 has excellent linearity, typically <4% added EVM up to 20 dBm output power which is essential for 54 Mbps 802.11g operation while meeting 802.11g spectrum mask at 23 dBm. The SST12LP14 also has wide-range (>25 dB), temperature-stable (~1 dB over 80°C), single-ended/differential power detectors which lower users' cost on power control.

The power amplifier IC also features easy board-level usage along with high-speed power-up/down control. Ultra-low reference current (total I_{REF} <4 mA) makes the SST12LP14 controllable by an on/off switching signal directly from the baseband chip. These features coupled with low operating current make the SST12LP14 ideal for the final stage power amplification in battery-powered 802.11g/b WLAN transmitter applications.

The SST12LP14 is offered in 16-contact VQFN package. See Figure 2 for pin assignments and Table 1 for pin descriptions.

©2011 Silicon Storage Technology, Inc.

Functional Blocks

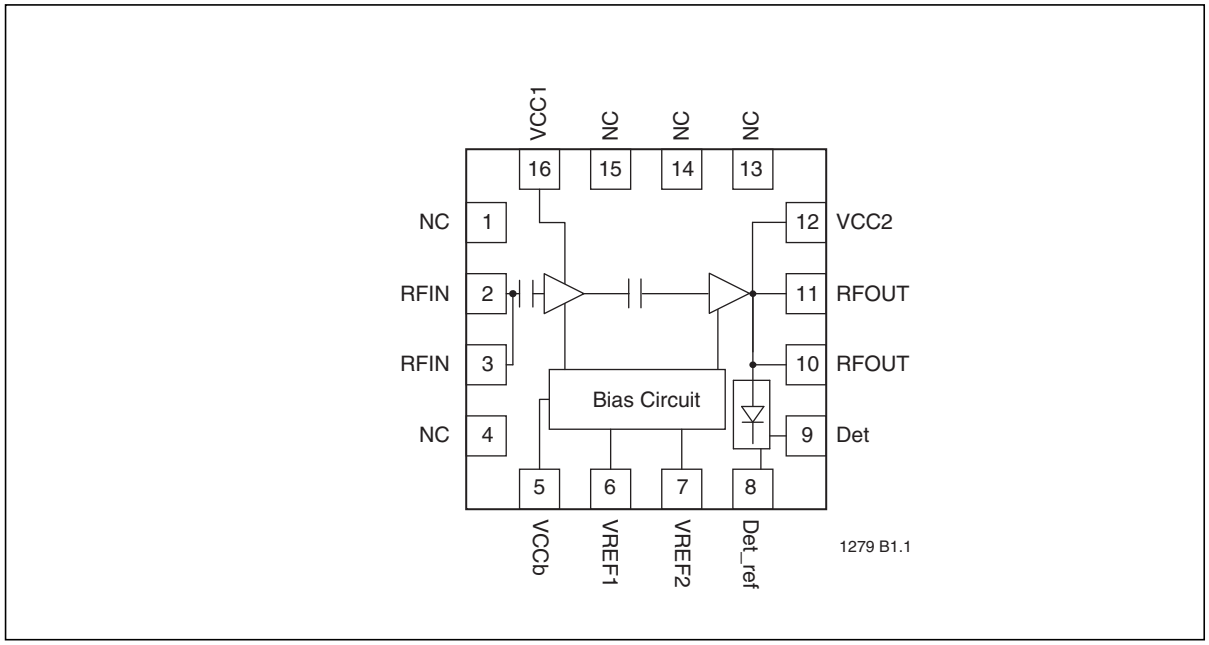

Figure 1: Functional Block Diagram

Pin Assignments

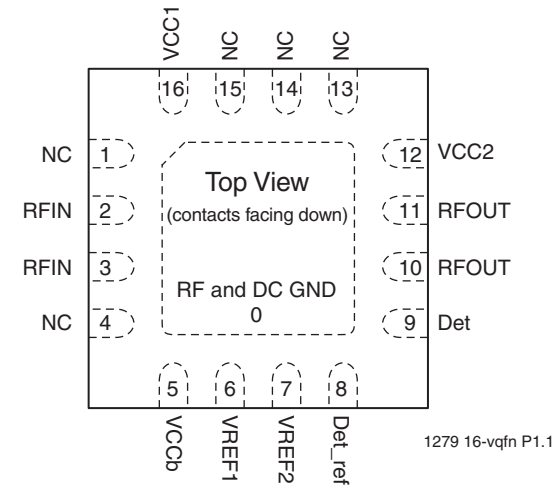

Figure 2: Pin Assignments for 16-contact VQFN

Pin Descriptions

Table 1: Pin Description

Symbol	Pin No.	Pin Name	Type[1]	Function
GND	0	Ground		The center pad should be connected to RF ground with several low inductance, low resistance vias.
NC	1	No Connection		Unconnected pins.
RFIN	2		I	RF input, DC decoupled
RFIN	3		I	RF input, DC decoupled
NC	4	No Connection		Unconnected pins.
VCCb	5	Power Supply	PWR	Supply voltage for bias circuit
VREF1	6		PWR	1st stage idle current control
VREF2	7		PWR	2nd stage idle current control
Det_ref	8		O	On-chip power detector reference
Det	9		O	On-chip power detector
RFOUT	10		O	RF output
RFOUT	11		O	RF output
VCC2	12	Power Supply	PWR	Power supply, 2nd stage
NC	13	No Connection		Unconnected pins.
NC	14	No Connection		Unconnected pins.
NC	15	No Connection		Unconnected pins.
VCC1	16	Power Supply	PWR	Power supply, 1st stage

T1.0 75031

1. I=Input, O=Output

Electrical Specifications

The AC and DC specifications for the power amplifier interface signals. Refer to Table 3 for the DC voltage and current specifications. Refer to Figures 3 through 13 for the RF performance.

Absolute Maximum Stress Ratings (Applied conditions greater than those listed under "Absolute Maximum Stress Ratings" may cause permanent damage to the device. This is a stress rating only and functional operation of the device at these conditions or conditions greater than those defined in the operational sections of this data sheet is not implied. Exposure to absolute maximum stress rating conditions may affect device reliability.)

Supply Voltage at pins 5, 12, and 16 (V_{CC}) . . . . . -0.3V to +4.6V
Reference voltage to pin 6 (V_{REF1}) and pin 7 (V_{REF2}) . . . . . -0.3V to +3.6V
DC supply current (I_{CC}) . . . . . 500 mA
Operating Temperature (T_A) . . . . . -40°C to +85°C
Storage Temperature (T_{STG}) . . . . . -40°C to +120°C
Maximum Junction Temperature (T_J) . . . . . +150°C
Surface Mount Solder Reflow Temperature: . . . . . "with-Pb" units[1]: 240°C for 3 seconds
. . . . . "non-Pb" units: 260°C for 3 seconds

1. Certain "with-Pb" package types are capable of 260°C for 3 seconds; please consult the factory for the latest information.

Table 2: Operating Range

Range	Ambient Temp	V_{DD}
Industrial	-40°C to +85°C	3.3V

T2.1 75031

Table 3: DC Electrical Characteristics

Symbol	Parameter	Min.	Typ	Max.	Unit	Test Conditions
V_{CC}	Supply Voltage at pins 5, 12, 16	3.0	3.3	4.2	V	
I_{CC}	Supply Current					
	for 802.11g, 24 dBm			290	mA	
	for 802.11g, 25 dBm			340	mA	
I_{CQ}	Idle current for 802.11g to meet EVM @ 20.5 dBm		55		mA	
I_{OFF}	Shut down current			0.1	µA	
V_{REG1}	Reference Voltage for 1st Stage, with 120Ω resistor	2.7	2.9	3.1	V	
V_{REG2}	Reference Voltage for 2nd Stage, with 360Ω resistor	2.7	2.9	3.1	V	
V_{REG1}	Reference Voltage for 1st Stage, with 220Ω resistor	2.9	3.1	3.3	V	
V_{REG2}	Reference Voltage for 2nd Stage, with 590Ω resistor	2.9	3.1	3.3	V	

T3.0 75031

©2011 Silicon Storage Technology, Inc.

Table 4: AC Electrical Characteristics for Configuration

Symbol	Parameter	Min.	Typ	Max.	Unit
F_{L-U}	Frequency range	2400		2485	MHz
P_{OUT}	Output power				
	@ PIN = -7 dBm 11b signals	23			dBm
	@ PIN = -10 dBm 11g signals	20			dBm
G	Small signal gain	30	31	33	dB
G_{VAR1}	Gain variation over band (2400~2485 MHz)			±0.5	dB
G_{VAR2}	Gain ripple over channel (20 MHz)		0.2		dB
ACPR	Meet 11b spectrum mask	23			dBm
	Meet 11g OFDM 54 MBPS spectrum mask	22			dBm
Added EVM	@ 20 dBm output with 11g OFDM 54 MBPS signal		3		%
2f, 3f, 4f, 5f	Harmonics at 22 dBm, without trapping capacitors			-40	dBc

T4.0 75031

©2011 Silicon Storage Technology, Inc.

Typical Performance Characteristics

Test Conditions: V_{CC} = 3.3V, T_A = 25°C

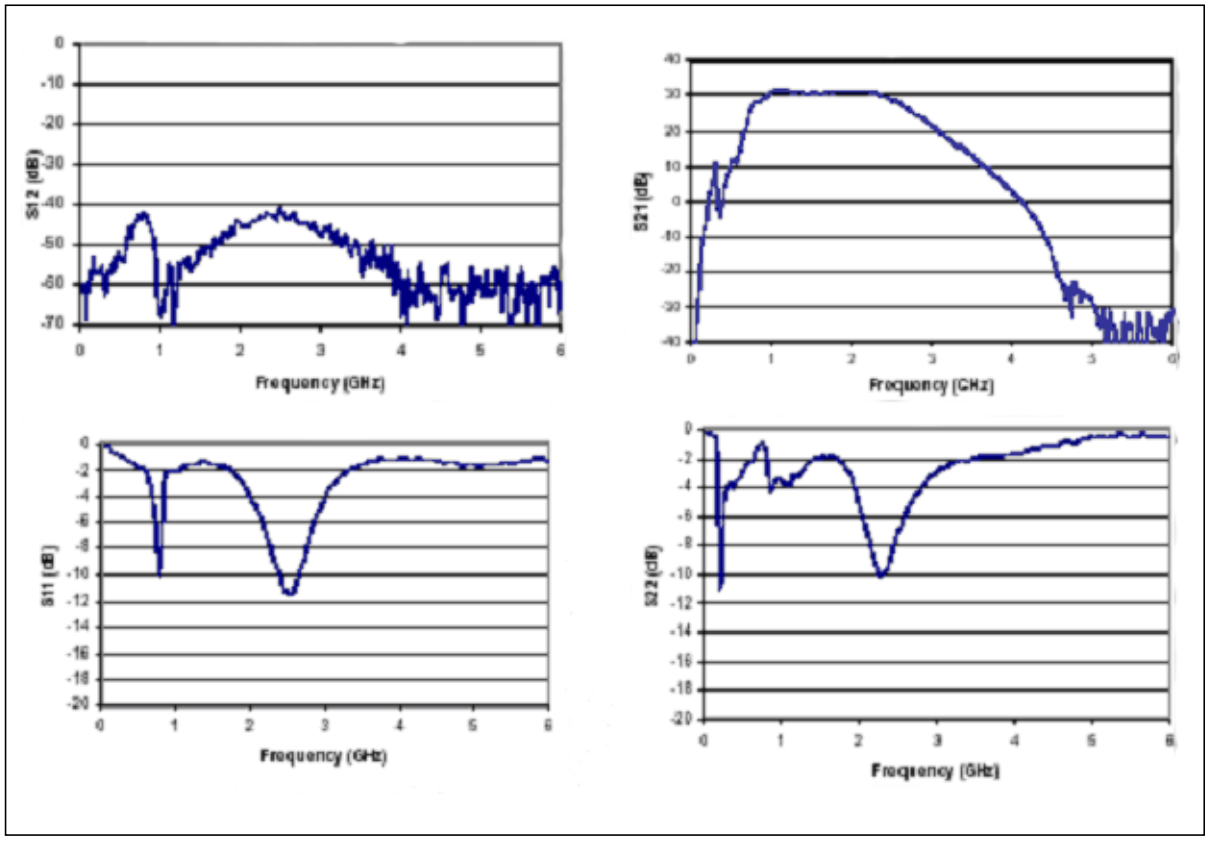

Figure 3: S-Parameters

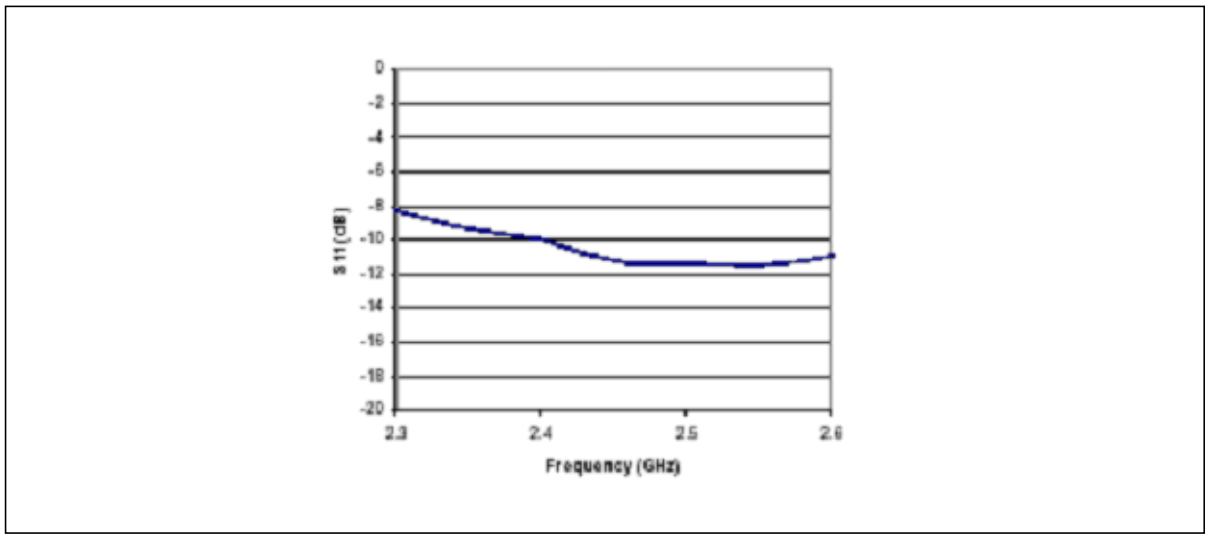

Figure 4: Input Return Loss

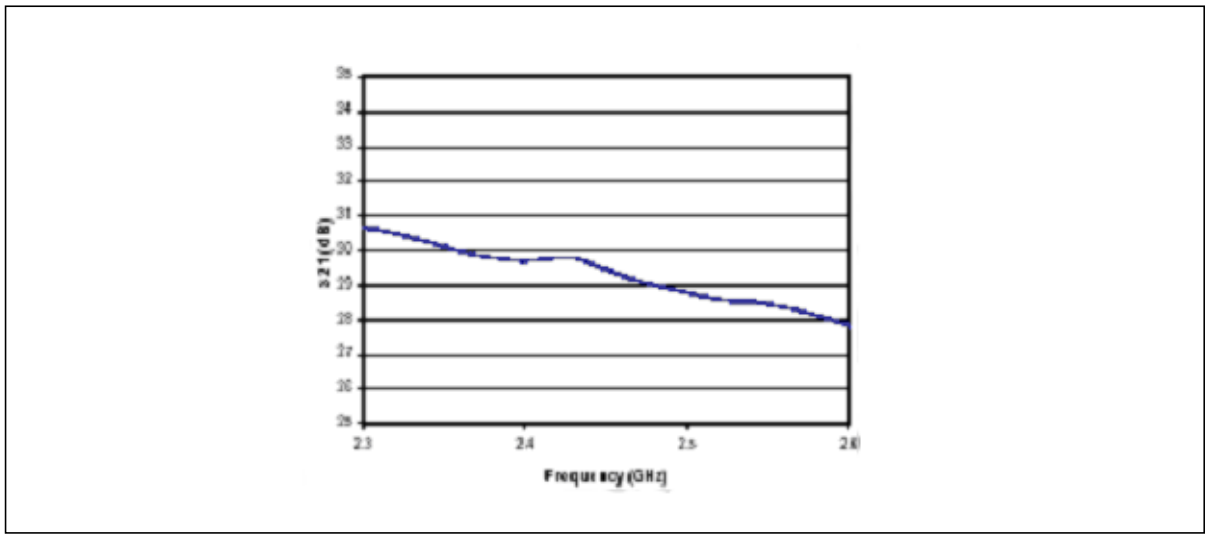

Figure 5: In-band Gain Flatness

Typical Performance Characteristics

Test Conditions: F1 = 2.45 GHz, F2 = 2.451 GHz

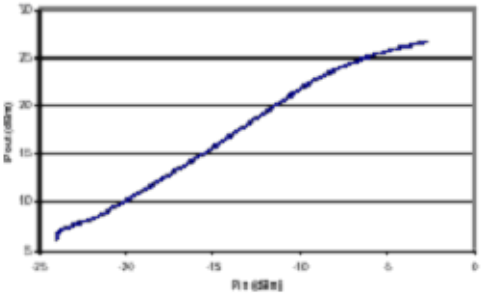

Figure 6: P_{OUT} vs P_{IN}

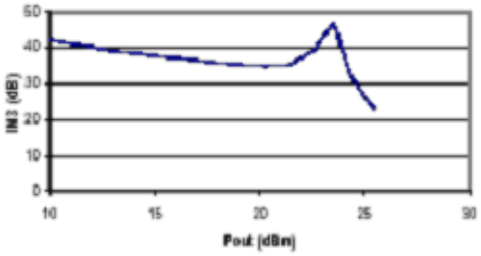

Figure 7: IM3 vs P_{OUT}

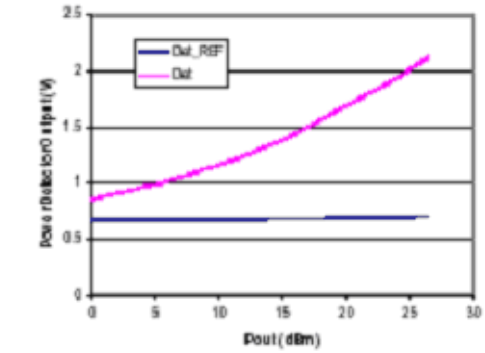

Figure 8: Detectors vs P_{OUT}

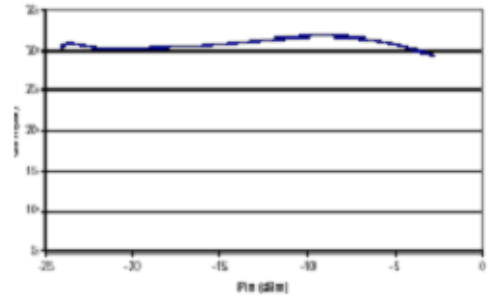

Figure 9: Gain vs P_{OUT}

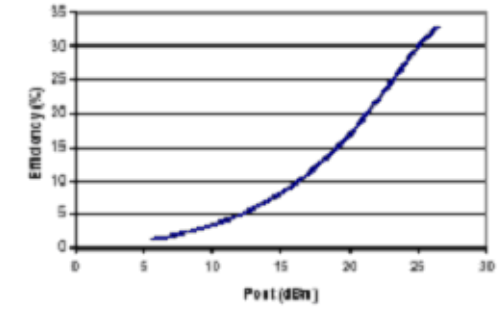

Figure 10: PAE for Two Tone

Typical Performance Characteristics

Test Conditions: V_{CC} = 3.3V, T_A = 25°C, F = 2.45 GHz, 54 Mbps 802.11g OFDM signal

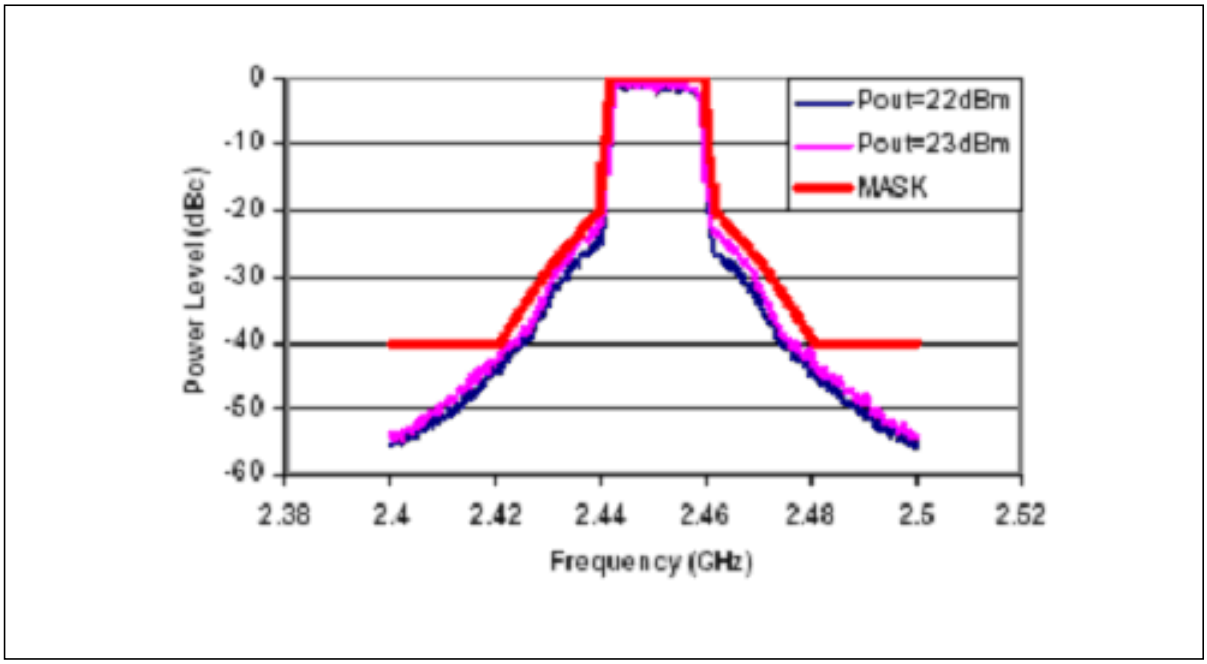

Figure 11:802.11g Spectrum at 22/23 dBm, DC current 210/240 mA

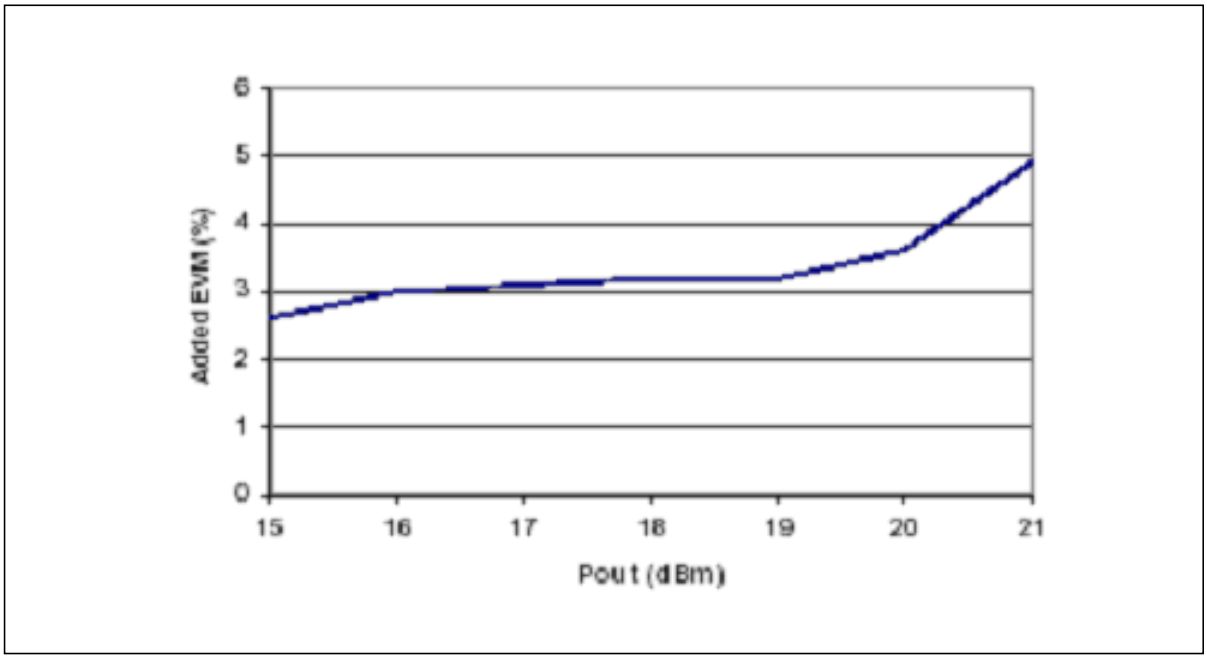

Figure 12:802.11g Added EVM for 54 Mbps 802.11g Signal

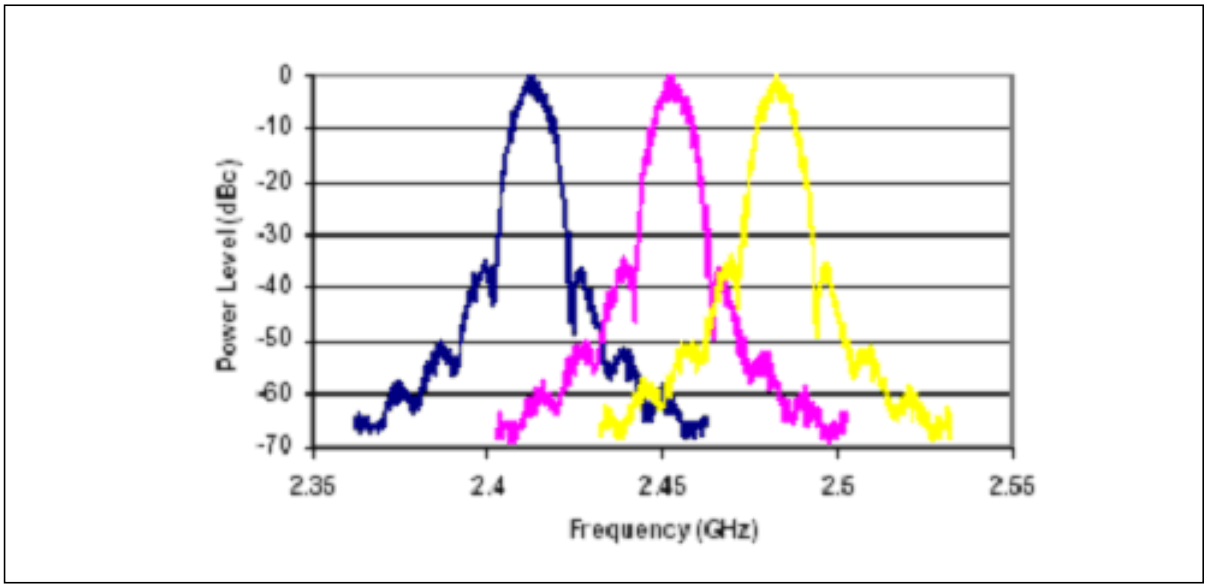

Figure 13:802.11b Spectrum at 24 dBm, DC current consumption 280 mA

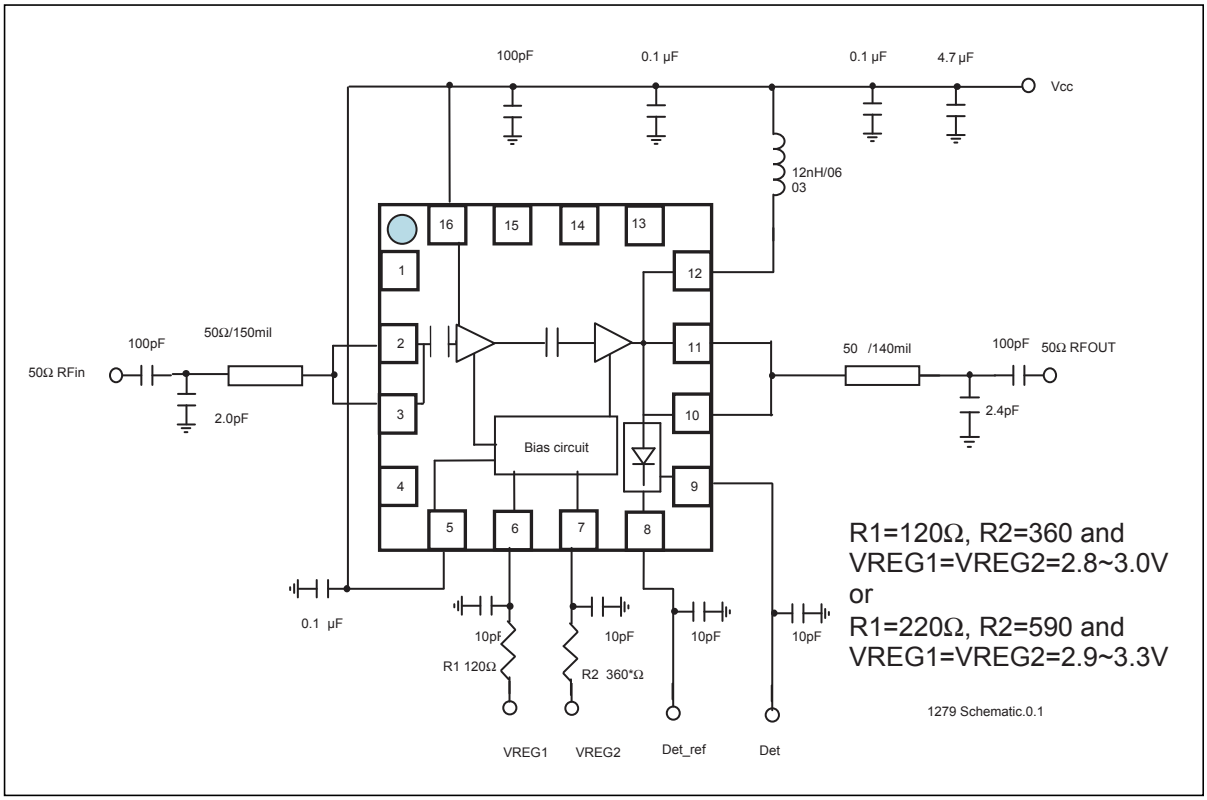

Figure 14: Typical Schematic for High-Power, High-Efficiency 802.11b/g Applications

Product Ordering Information

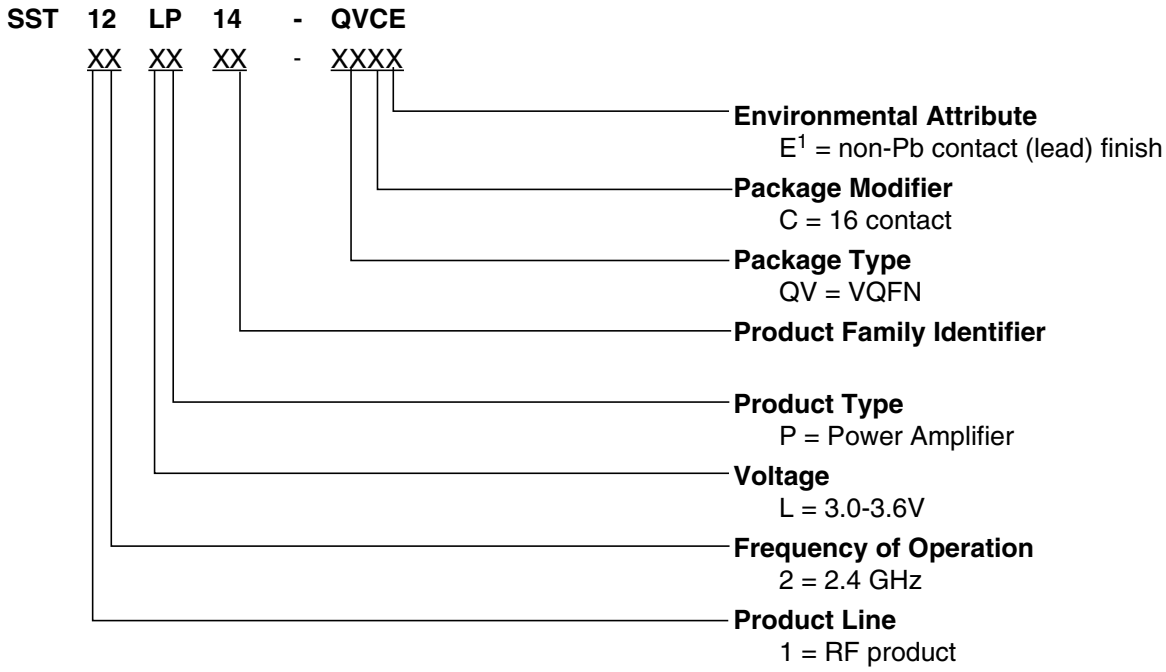

1. Environmental suffix “E” denotes non-Pb solder. SST non-Pb solder devices are “RoHS Compliant”.

Valid combinations for SST12LP14

SST12LP14-QVC
SST12LP14-QVCE

SST12LP14 Evaluation Kits

SST12LP14-QVC-K
SST12LP14-QVCE-K

Note: Valid combinations are those products in mass production or will be in mass production. Consult your SST sales representative to confirm availability of valid combinations and to determine availability of new combinations.

©2011 Silicon Storage Technology, Inc.

Packaging Diagrams

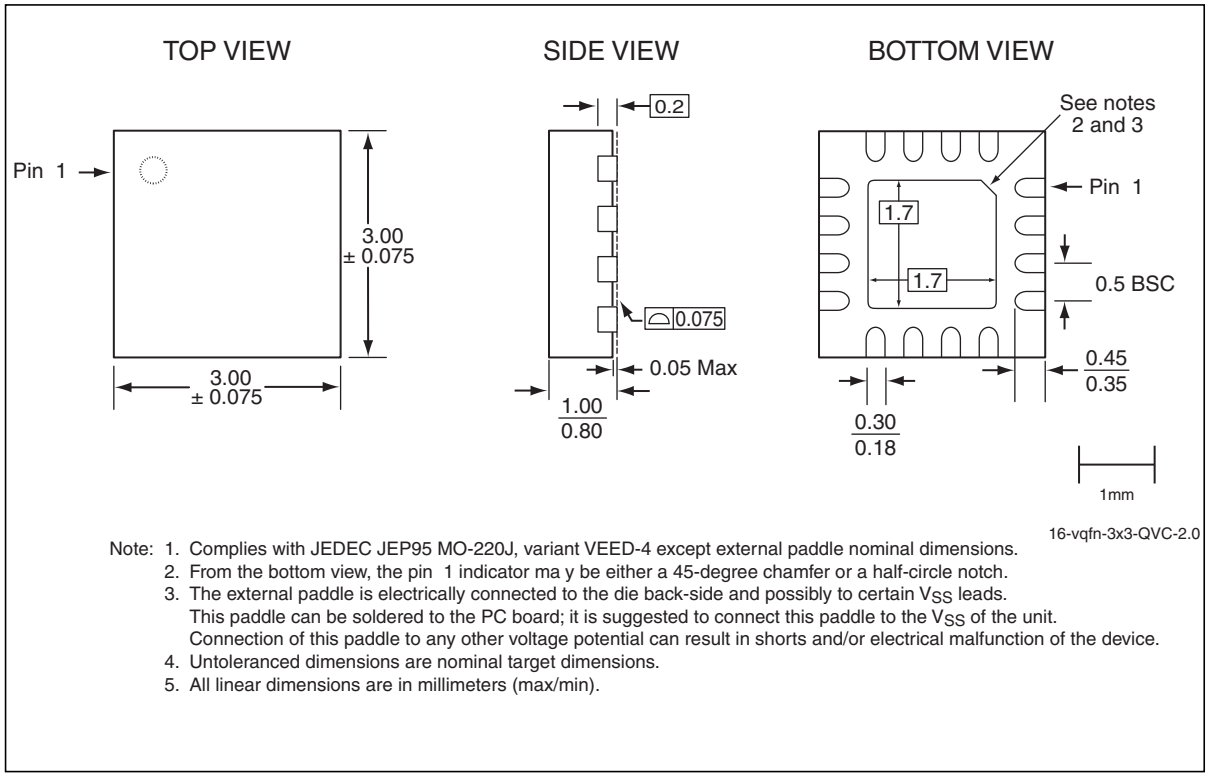

Note: 1. Complies with JEDEC JEP95 MO-220J, variant VEED-4 except external paddle nominal dimensions.
2. From the bottom view, the pin 1 indicator ma y be either a 45-degree chamfer or a half-circle notch.
3. The external paddle is electrically connected to the die back-side and possibly to certain V_{SS} leads. This paddle can be soldered to the PC board; it is suggested to connect this paddle to the V_{SS} of the unit. Connection of this paddle to any other voltage potential can result in shorts and/or electrical malfunction of the device.
4. Untoleranced dimensions are nominal target dimensions.
5. All linear dimensions are in millimeters (max/min).

Figure 15: 16-Contact Very-thin Quad Flat No-lead (VQFN)
SST Package Code: QVC

Table 5: Revision History

Revision	Description	Date
00	• DS75031: SST conversion of data sheet GP1214	Jan 2005
01	• Updated document status from Preliminary Specification to Data Sheet	Apr 2008
02	• Updated “Contact Information” on page 12.	Feb 2009
A	• Applied new document format • Released document under letter revision system • Updated Spec number from S71279 to DS75031	Oct 2011

ISBN:978-1-61341-699-0

© 2011 Silicon Storage Technology, Inc–a Microchip Technology Company. All rights reserved.

SST, Silicon Storage Technology, the SST logo, SuperFlash, MTP, and FlashFlex are registered trademarks of Silicon Storage Technology, Inc. MPF, SQI, Serial Quad I/O, and Z-Scale are trademarks of Silicon Storage Technology, Inc. All other trademarks and registered trademarks mentioned herein are the property of their respective owners.

Specifications are subject to change without notice. Refer to www.microchip.com for the most recent documentation. For the most current package drawings, please see the Packaging Specification located at http://www.microchip.com/packaging.

Memory sizes denote raw storage capacity; actual usable capacity may be less.

SST makes no warranty for the use of its products other than those expressly contained in the Standard Terms and Conditions of Sale.

For sales office locations and information, please see www.microchip.com.

Silicon Storage Technology, Inc.
A Microchip Technology Company
www.microchip.com