A Microchip Technology Company

2.4 GHz High-Power, High-Gain Power Amplifier
SST12LP07A

Data Sheet

The SST12LP07A is a versatile power amplifier based on the highly-reliable InGaP/GaAs HBT technology. It is easily configured for high-power applications with excellent (30.8%) power-added efficiency, operating over the 2.4- 2.5 GHz frequency band and meeting 802.11 b/g spectrum mask at 23.5 dBm. The SST12LP07A has excellent linearity, typically ~2.5% added EVM at 20 dBm output power, which is essential for 54 Mbps 802.g/n operation. The Power Amplifier has an excellent on-chip, single-ended power detector, providing a reliable solution to board-level power control. The SST12LP07A is offered in a 12-contact XQFN package.

Features

- **High Gain:**
  - Typically 28 dB gain across 2.4~2.5 GHz over temperature 0°C to +85°C
- **High linear output power:**
  - >28 dBm P1dB
    - Please refer to “Absolute Maximum Stress Ratings” on page 5
  - Meets 802.11g OFDM ACPR requirement up to 23.5 dBm
  - ~2.5% added EVM up to 20 dBm for 54 Mbps 802.11g signal
  - Meets 802.11b ACPR requirement up to 24 dBm
- **High power-added efficiency/Low operating current for both 802.11g/b applications**
  - ~30.8%/220 mA @ P_{OUT} = 23.5 dBm for both 802.11g and 802.11b
- **Single-pin low I_{REF} power-up/down control**
  - I_{REF} <2 mA
- **Low idle current**
  - ~70 mA I_{CQ}
- **High-speed power-up/down**
  - Turn on/off time (10%- 90%) <100 ns
  - Typical power-up/down delay with driver delay included <200 ns
- **High temperature stability**
  - ~1 dB gain/power variation between 0°C to +85°C
- **Excellent On-chip power detection**
- **20 dB dynamic range on-chip power detection**
- **Simple input/output matching**
- **Packages available**
  - 12-contact XQFN – 2mm x 2mm
- **All non-Pb (lead-free) devices are RoHS compliant**

Applications

- **WLAN (IEEE 802.11g/b)**
- **Home RF**
- **Cordless phones**
- **2.4 GHz ISM wireless equipment**

PROPRIETARY AND CONFIDENTIAL

Product Description

The SST12LP07A is a versatile power amplifier based on the highly-reliable InGaP/GaAs HBT technology.

The SST12LP07A can be easily configured for high-power applications with good power-added efficiency while operating over the 2.4- 2.5 GHz frequency band. It typically provides 28 dB gain with 30.8% power-added efficiency @ P_{OUT} = 23.5 dBm for both 802.11g and 802.11b.

The SST12LP07A has excellent linearity, typically ~2.5% added EVM at 20 dBm output power which is essential for 54 Mbps 802.11g operation while meeting 802.11g spectrum mask at 23.5 dBm.

The SST12LP07A also features easy board-level usage along with high-speed power-up/down control through a single combined reference voltage pin. Ultra-low reference current (total I_{REF} ~2 mA) makes the SST12LP07A controllable by an on/off switching signal directly from the baseband chip. These features coupled with low operating current make the SST12LP07A ideal for the final stage power amplification in battery-powered 802.11g/b WLAN transmitter applications.

The SST12LP07A has an excellent on-chip, single-ended power detector, which features wide-range (>15 dB) with dB-wise linearization. The excellent on-chip power detector provides a reliable solution to board-level power control.

The SST12LP07A is offered in 12-contact XQFN package. See Figure 2 for pin assignments and Table 1 for pin descriptions.

PROPRIETARY AND CONFIDENTIAL

Functional Blocks

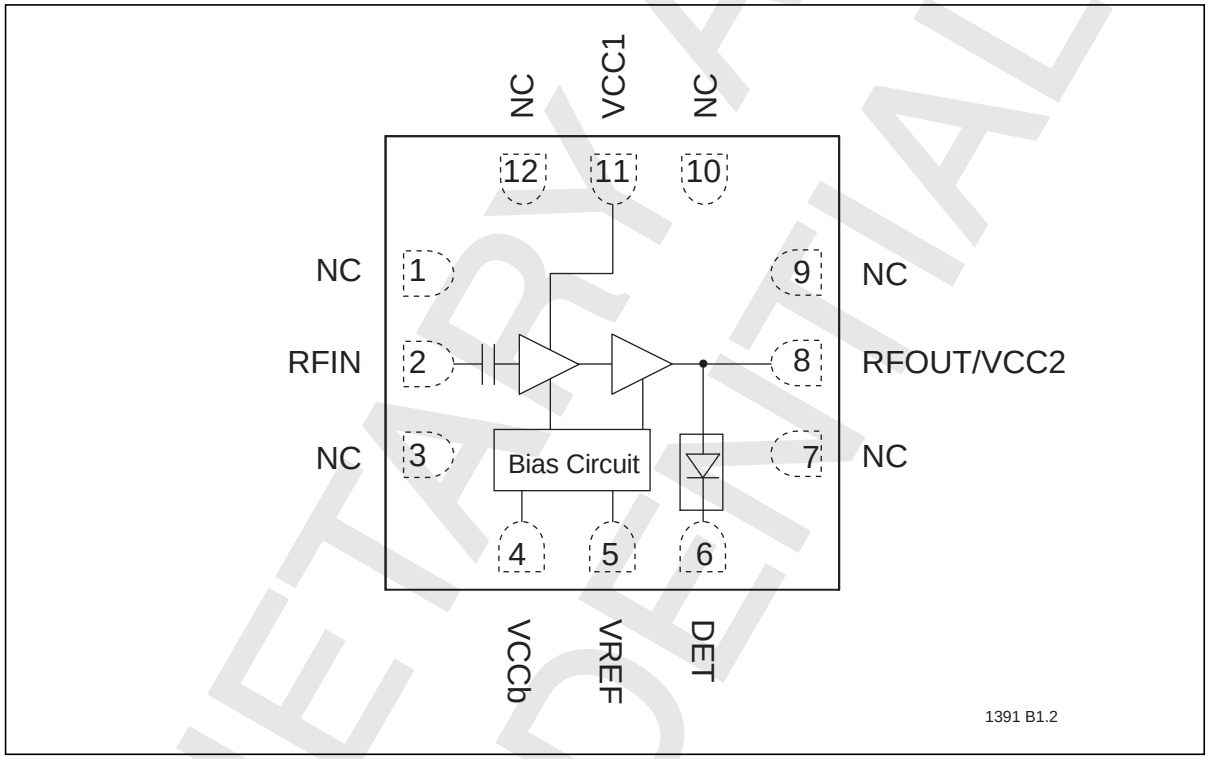

Figure 1: Functional Block Diagram

PROPRIETARY AND CONFIDENTIAL

Pin Assignments

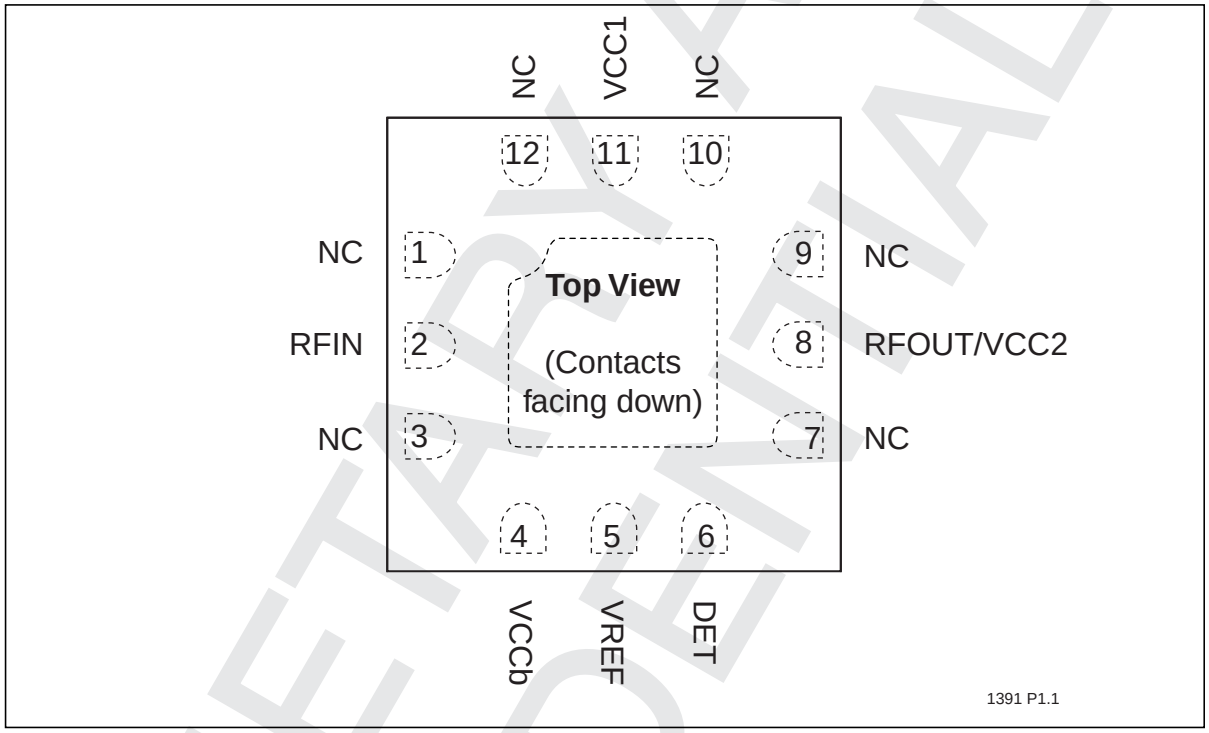

Figure 2: Pin Assignments for 12-contact XQFN

Pin Descriptions

Table 1: Pin Description

Symbol	Pin No.	Pin Name	Type[1]	Function
GND	0	Ground		Low-inductance GND pad
NC	1	No Connection		Unconnected pin
RFIN	2		I	RF input, DC decoupled
NC	3	No Connection		Unconnected pin
VCCb	4	Power Supply	PWR	Supply voltage for bias circuit
VREF	5		PWR	1st and 2nd stage idle current control
Det	6		O	On-chip power detector
NC	7	No Connection		Unconnected pin
VCC2/RFOUT	8	Power Supply	PWR/O	Power Supply, 2nd stage / RF output
NC	9	No Connection		Unconnected pin
NC	10	No Connection		Unconnected pin
VCC1	11	Power Supply	PWR	Power supply, 1st stage
NC	12	No Connection		Unconnected pin

T1.0 75035

1. I=Input, O=Output

PROPRIETARY AND CONFIDENTIAL

Electrical Specifications

The AC and DC specifications for the power amplifier interface signals. Refer to Table 3 for the DC voltage and current specifications. Refer to Figures 3 through 10 for the RF performance.

Absolute Maximum Stress Ratings (Applied conditions greater than those listed under "Absolute Maximum Stress Ratings" may cause permanent damage to the device. This is a stress rating only and functional operation of the device at these conditions or conditions greater than those defined in the operational sections of this data sheet is not implied. Exposure to absolute maximum stress rating conditions may affect device reliability.)

Input power to pin 2 (P_{IN}) . . . . . +5 dBm
Average output power (P_{OUT})[1] . . . . . +26 dBm
Supply Voltage at pins 4, 8, and 11 (V_{CC}) . . . . . -0.3V to +4.6V
Reference voltage to pin 5 (V_{REF}) . . . . . -0.3V to +3.3V
DC supply current (I_{CC})[2] . . . . . 300 mA
Operating Temperature (T_A) . . . . . -40ºC to +85ºC
Storage Temperature (T_{STG}) . . . . . -40ºC to +120ºC
Maximum Junction Temperature (T_J) . . . . . +150ºC
Surface Mount Solder Reflow Temperature . . . . . 260°C for 10 seconds

1. Never measure with CW source. Pulsed single-tone source with <50% duty cycle is recommended. Exceeding the maximum rating of average output power could cause permanent damage to the device.
2. Measured with 100% duty cycle 54 Mbps 802.11g OFDM Signal

Table 2: Operating Range

Range	Ambient Temp	V_{CC}
Industrial	-40°C to +85°C	3.3V

T2.1 75035

Table 3: DC Electrical Characteristics at 25°C

Symbol	Parameter	Min.	Typ	Max.	Unit	Test Conditions
V_{CC}	Supply Voltage at pins 4, 8, 11	3.0	3.3	4.2	V	
I_{CC}	Supply Current					
	for 802.11g, 23.5 dBm		220		mA	
	for 802.11b, 23.5 dBm		220		mA	
I_{CQ}	Idle current for 802.11g to meet EVM ~2.5% @ 20 dBm		70		mA	
V_{REG}	Reference Voltage for, with 130Ω resistor	2.75	2.85	2.95	V	

T3.1 75035

PROPRIETARY AND CONFIDENTIAL

Table 4: AC Electrical Characteristics for Configuration at 25°C

Symbol	Parameter	Min.	Typ	Max.	Unit
F_{L-U}	Frequency range	2412		2484	MHz
G	Small signal gain	27	28		dB
G_{VAR1}	Gain variation over band (2412–2484 MHz)			±0.5	dB
G_{VAR2}	Gain ripple over channel (20 MHz)		0.2		dB
ACPR	Meet 11b spectrum mask	23			dBm
	Meet 11g OFDM 54 Mbps spectrum mask	23			dBm
Added EVM	@ 20 dBm output with 11g OFDM 54 Mbps signal		2.5		%
2f, 3f, 4f, 5f	Harmonics at 22 dBm, without external filters			-40	dBc

T4.2 75035

PROPRIETARY AND CONFIDENTIAL

©2012 Silicon Storage Technology, Inc.

Typical Performance Characteristics

Test Conditions: V_{CC} = 3.3V, T_A = 25°C, unless otherwise specified

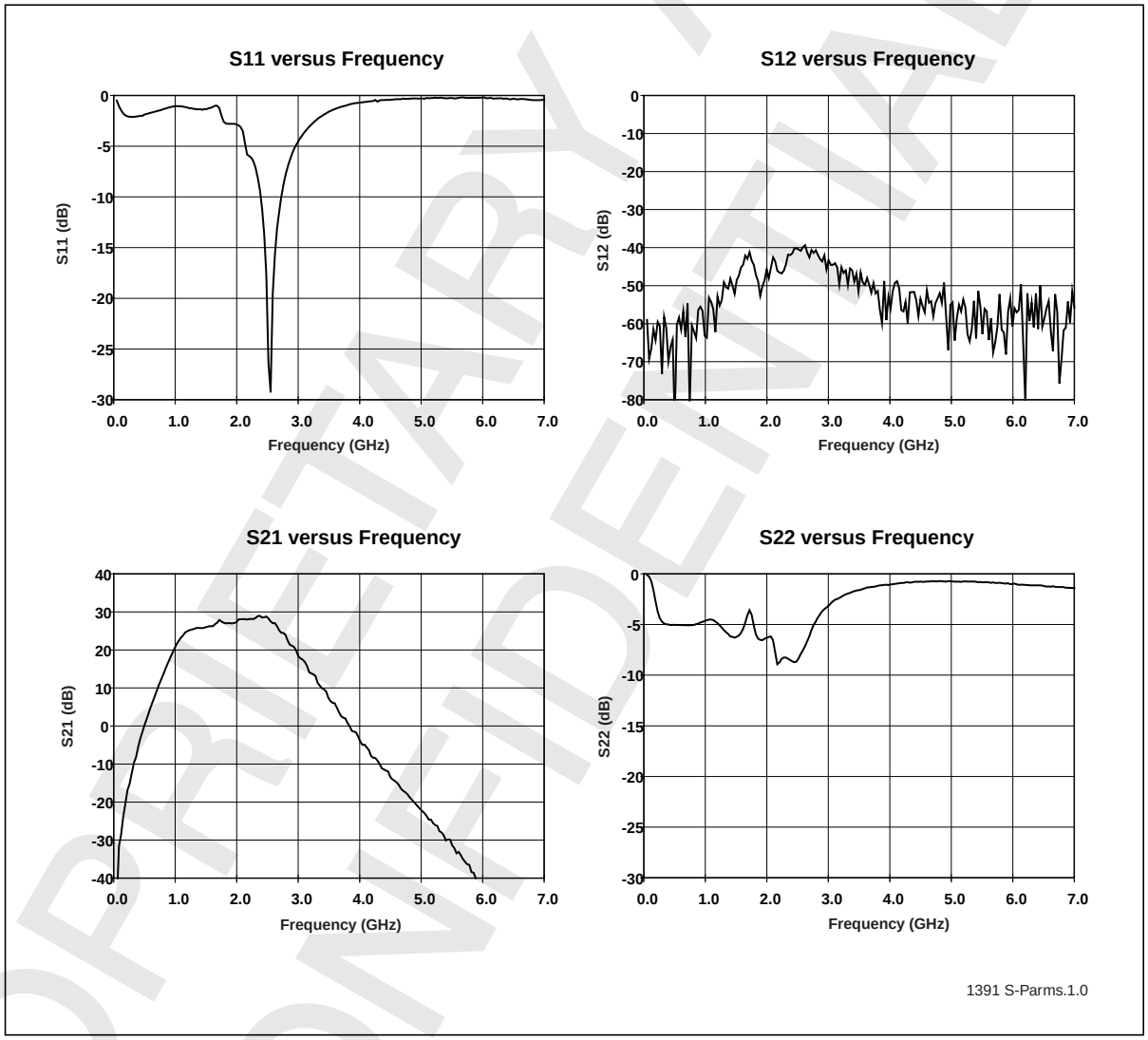

Figure 3: S-Parameters

PROPRIETARY AND CONFIDENTIAL

Typical Performance Characteristics

Test Conditions: V_{CC} = 3.3V, T_A = 25°C, 54 Mbps 802.11g OFDM Signal

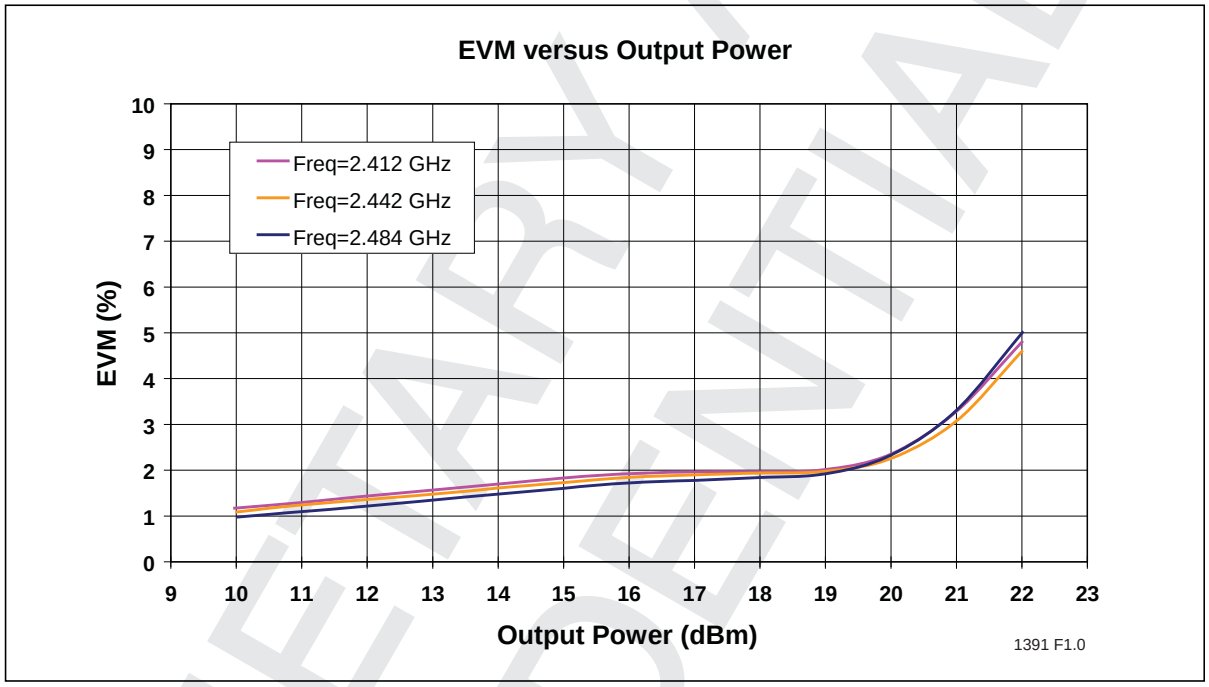

Figure 4: EVM versus Output Power

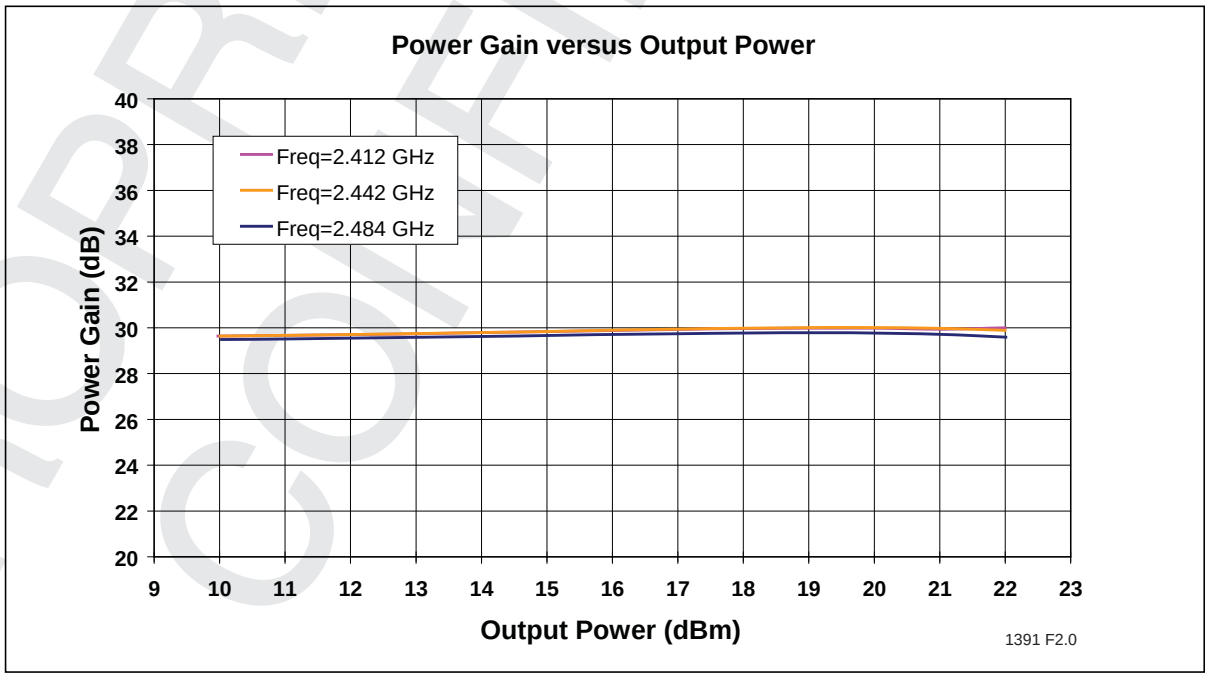

Figure 5: Power Gain versus Output Power

PROPRIETARY AND CONFIDENTIAL

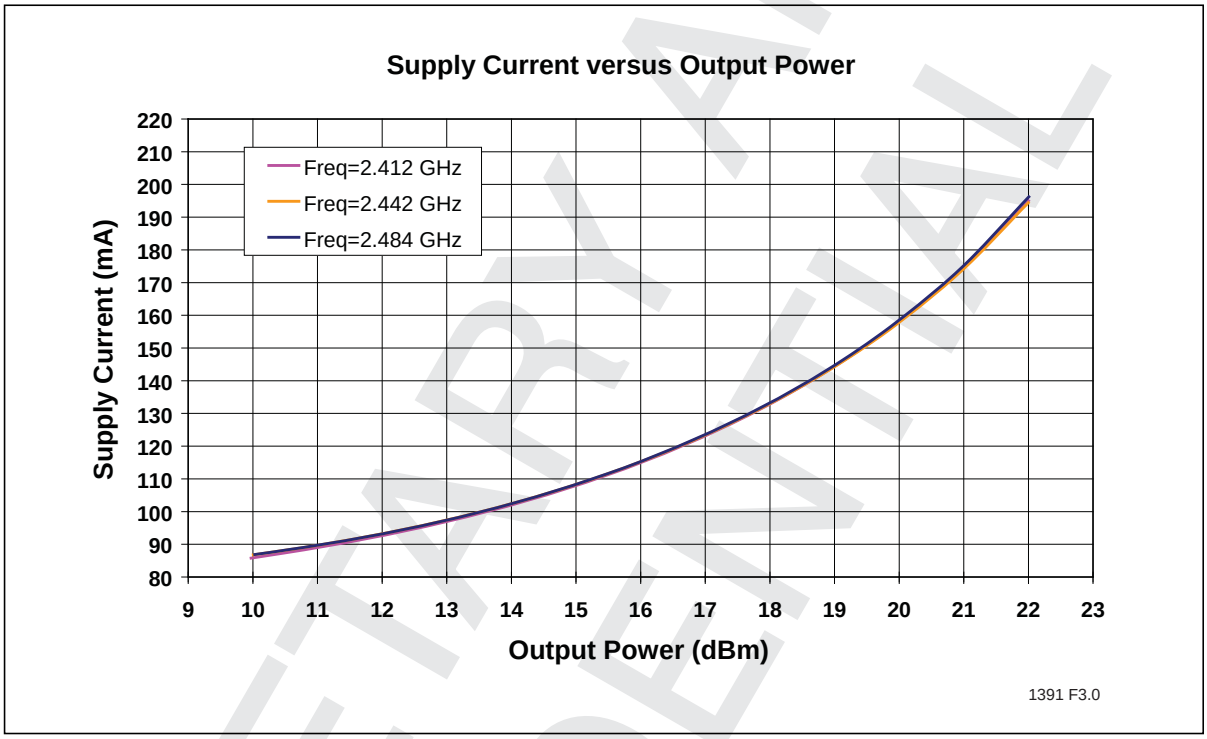

Figure 6: Total Current Consumption for 802.11g operation versus Output Power

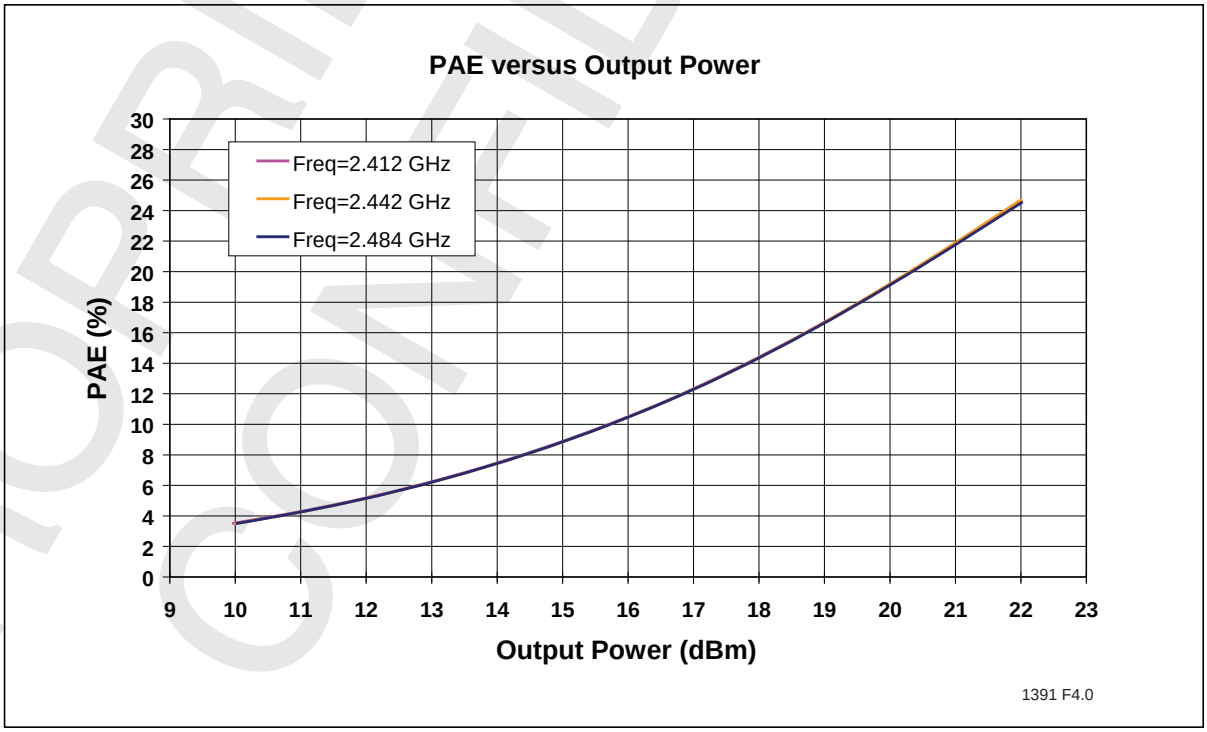

Figure 7: PAE versus Output Power

PROPRIETARY AND CONFIDENTIAL

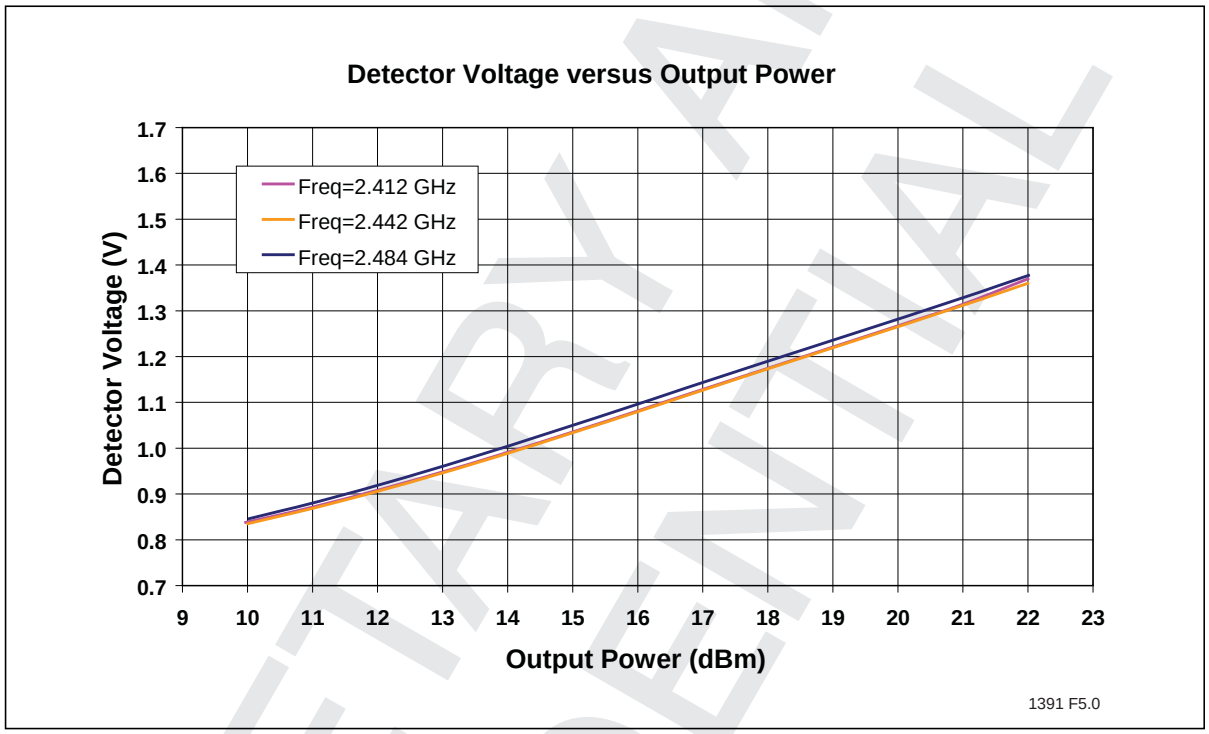

Figure 8: Detector Characteristics versus Output Power

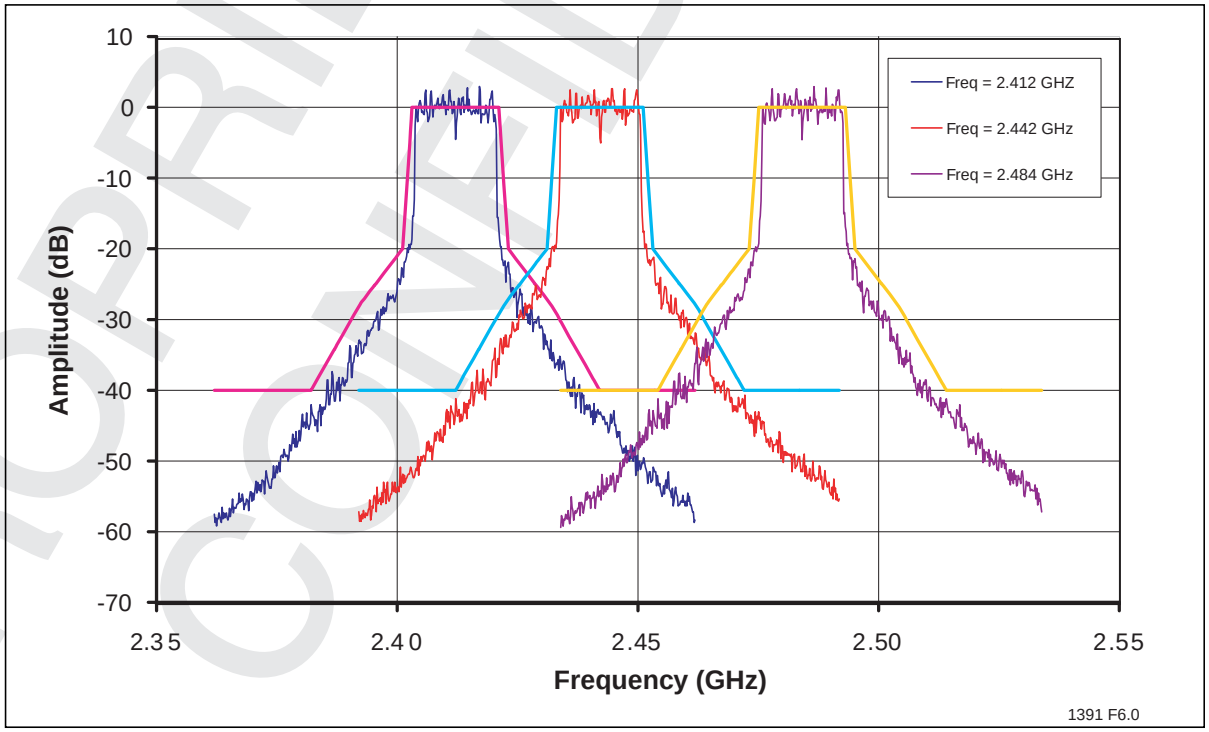

Figure 9: 802.11g Spectrum Mask at 23.5 dBm, Total Current 220 mA

PROPRIETARY AND CONFIDENTIAL

Typical Performance Characteristics

Test Conditions: V_{CC} = 3.3V, T_A = 25°C, 1 Mbps 802.11b CCK Signal

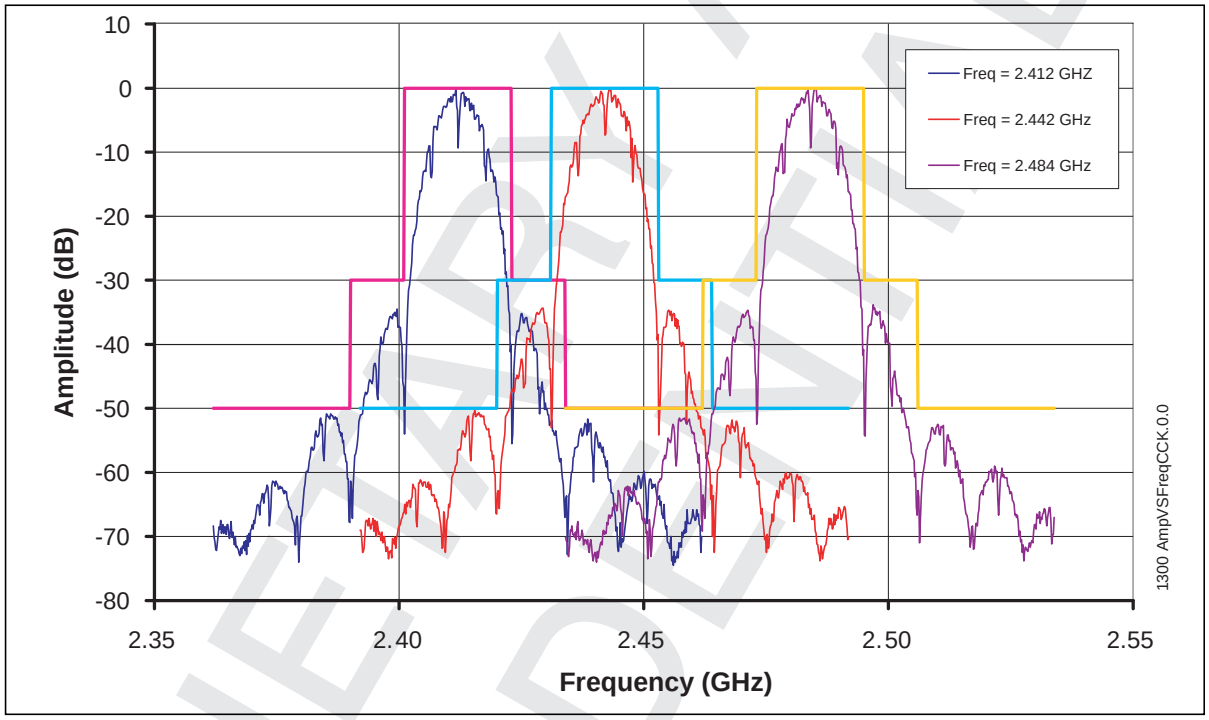

Figure 10: 802.11b Spectrum Mask at 23.5 dBm, Total Current 220 mA

PROPRIETARY AND CONFIDENTIAL

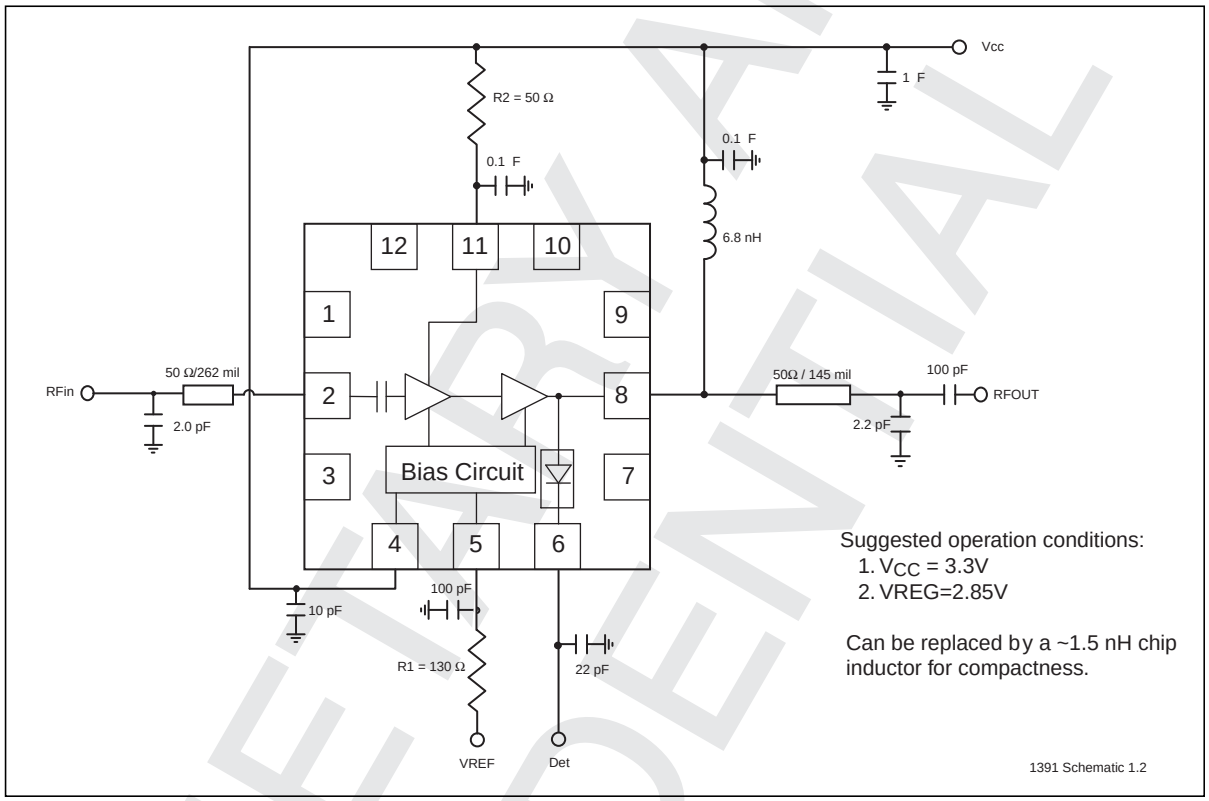

Figure 11: Typical Schematic for High-Power/High-Efficiency 802.11b/g Applications

PROPRIETARY AND CONFIDENTIAL

Product Ordering Information

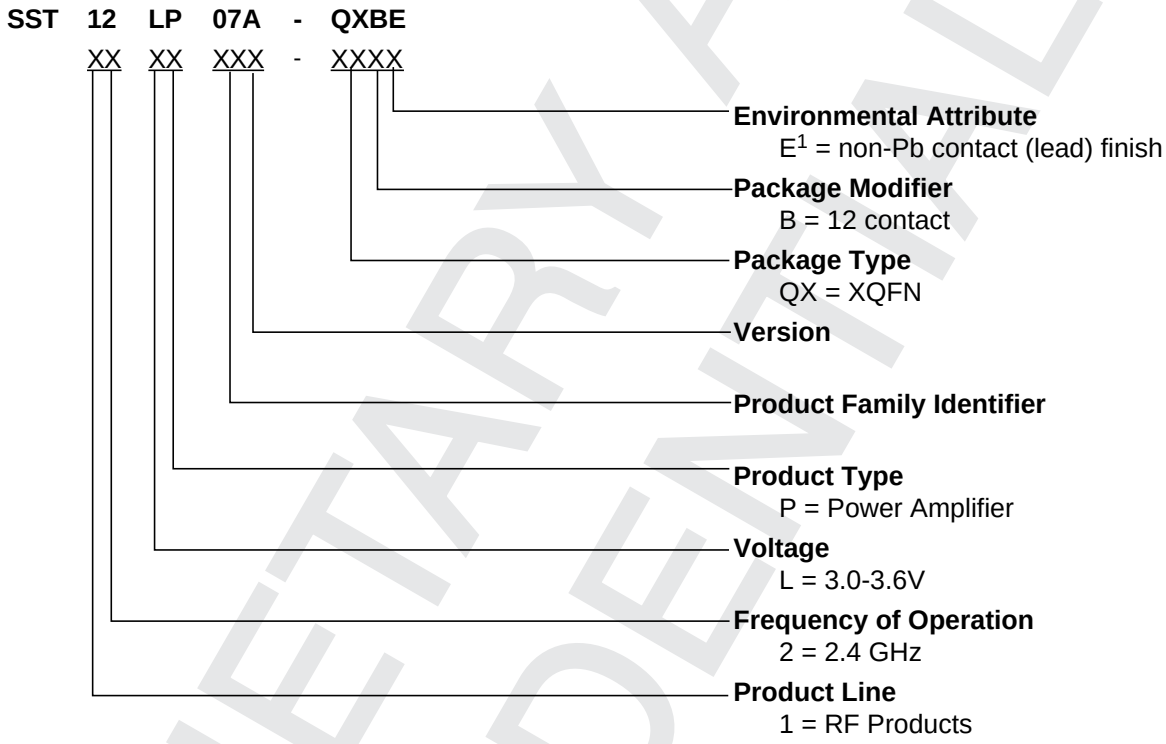

1. Environmental suffix “E” denotes non-Pb solder. SST non-Pb solder devices are “RoHS Compliant”.

Valid combinations for SST12LP07A

SST12LP07A-QXBE

SST12LP07A Evaluation Kits

SST12LP07A-QXBE-K

Note: Valid combinations are those products in mass production or will be in mass production. Consult your SST sales representative to confirm availability of valid combinations and to determine availability of new combinations.

PROPRIETARY AND CONFIDENTIAL

Packaging Diagrams

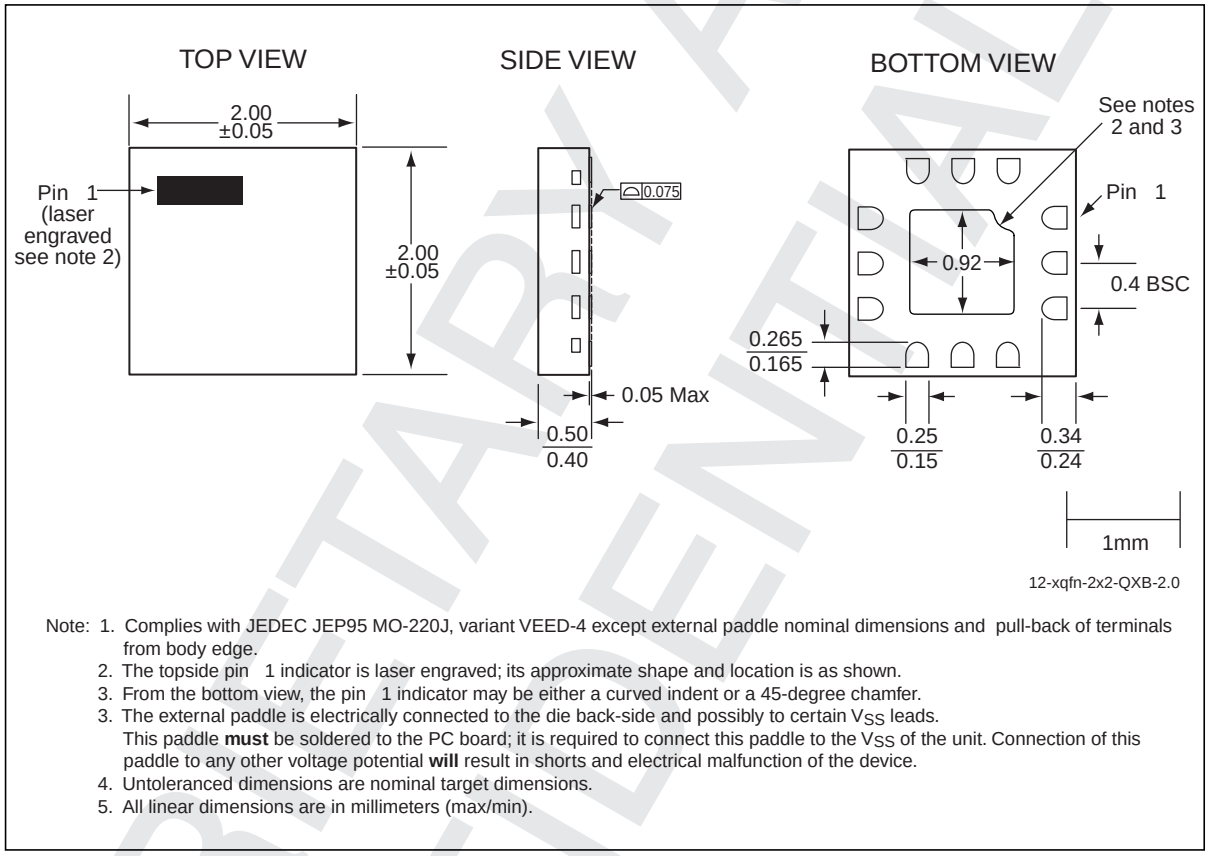

Note: 1. Complies with JEDEC JEP95 MO-220J, variant VEED-4 except external paddle nominal dimensions and pull-back of terminals from body edge.
2. The topside pin 1 indicator is laser engraved; its approximate shape and location is as shown.
3. From the bottom view, the pin 1 indicator may be either a curved indent or a 45-degree chamfer.
3. The external paddle is electrically connected to the die back-side and possibly to certain V_{SS} leads. This paddle **must** be soldered to the PC board; it is required to connect this paddle to the V_{SS} of the unit. Connection of this paddle to any other voltage potential **will** result in shorts and electrical malfunction of the device.
4. Untoleranced dimensions are nominal target dimensions.
5. All linear dimensions are in millimeters (max/min).

Figure 12: 12-Contact Extremely-thin Quad Flat No-lead (XQFN)
SST Package Code: QXB

PROPRIETARY AND CONFIDENTIAL

Table 5: Revision History

Revision	Description	Date
00	• Initial release of data sheet	Aug 2008
01	• Revised “Features” and “Product Description” on page 2 • Updated Table 3 and Table 4 on page 6 • Modified Figure 11	Nov 2008
02	• Updated Contact Information	Mar 2009
A	• Updated “Absolute Maximum Stress Ratings” on page 5 from 4.0V to 4.6V • Updated max Supply Voltage in Table 3 on page 5 from 3.6V to 4.2V • Applied new document format • Released document under letter revision system • Updated Spec number from S71391 to DS75039	Mar 2012
B	• Updated Figure 12 to reflect new Pin1 indicator.	May 2012

ISBN:978-1-62076-315-5

© 2012 Silicon Storage Technology, Inc–a Microchip Technology Company. All rights reserved.

SST, Silicon Storage Technology, the SST logo, SuperFlash, MTP, and FlashFlex are registered trademarks of Silicon Storage Technology, Inc. MPF, SQI, Serial Quad I/O, and Z-Scale are trademarks of Silicon Storage Technology, Inc. All other trademarks and registered trademarks mentioned herein are the property of their respective owners.

Specifications are subject to change without notice. Refer to www.microchip.com for the most recent documentation. For the most current package drawings, please see the Packaging Specification located at http://www.microchip.com/packaging.

Memory sizes denote raw storage capacity; actual usable capacity may be less.

SST makes no warranty for the use of its products other than those expressly contained in the Standard Terms and Conditions of Sale.

For sales office(s) location and information, please see www.microchip.com.

Silicon Storage Technology, Inc.
A Microchip Technology Company
www.microchip.com