SST12LF09

2.4 GHz High-Linearity, WLAN Front-End Module

FEATURES

- Input/output ports internally matched to 50Ω and DC decoupled
- Package available
  - 16-contact X2QFN – 2.5mm x 2.5mmx 0.4mm
- All non-Pb (lead-free) devices are RoHS compliant

Transmitter Chain

- Gain:
  - Typically 24 dB gain
- Dynamic linear output power:
  - Meets 802.11g OFDM ACPR requirement up to 21 dBm using 3.6V V_{CC} and 22.5 dBm using 5V V_{CC}
  - 17 dBm using 3.6V, 18 dBm using 5.0V, at 3% EVM for 802.11g, 54 Mbps
  - 15 dBm using 3.6V, 16 dBm using 5.0V, at 1.75% dynamic EVM for 256 QAM, 40 MHz bandwidth
- Operating current
  - 150 mA @ P_{OUT} = 17 dBm for 802.11g, 3.6V
  - 130 mA @ P_{OUT} = 15 dBm for MCS9, 3.6V
- PA Control current, I_{PEN}:<3 mA
- Idle current, I_{CQ}:90 mA (3.6V V_{CC})
- Low shut-down current: ~2 µA
- Power-up/down control
  - Turn on/off time (10%–90%) <400 ns
- Limited variation over temperature
  - ~1 dB power variation between -40°C to +85°C
- Linear on-chip power detection
  - Load and temperature insensitive
  - >20 dB dynamic range on-chip power detection

Receiver Chain

- Gain: Typically 12 dB gain
- Noise figure: Typically 2.5 dB
- Receiver input P1dB: Typically -6 dBm
- LNA bypass loss: Typically 9 dB

Bluetooth® Chain

- Loss: 1.6dB
- Output P1dB: >25 dBm

APPLICATIONS

- WLAN (IEEE 802.11b/g/n/256 QAM)
- Home RF
- Cordless phones
- 2.4 GHz ISM wireless equipment

1.0 PRODUCT DESCRIPTION

SST12LF09 is a 2.4 GHz Front-end Module (FEM) designed in compliance with IEEE 802.11b/g/n and 256 QAM applications. Based on GaAs pHEMT/HBT technology, it combines a high-performance transmitter power amplifier (PA), a low-noise receiver amplifier (LNA) and an antenna Tx/Rx/BT switch (SP3T SW). The input/output RF ports are single-ended and internally matched to 50 Ω. These RF ports are DC decoupled, and require no DC-blocking capacitors or matching components. This helps reduce the system board Bill of Materials (BOM) cost.

There are two components to the FEM: the Transmitter (TX) chain and the Receiver (RX) chain.

The TX chain includes a high-efficiency PA based on the InGaP/GaAs HBT technology. The transmitter is optimized for high linearity, 802.11n and 256 QAM operation–typically providing 15 dBm with 1.75% dynamic EVM for 256 QAM, 40 MHz operation and 17 dBm at 3% for 802.11g, 54 Mbps operation at 3.6V. At 5V V_{CC}, the transmitter provides typically 17 dBm with 1.75% dynamic EVM for 256 QAM, 40 MHz operation and 18 dBm at 3% for 802.11g, 54 Mbps operation.

SST12LF09 has a transmitter on-chip, single-ended power detector that is stable over temperature and insensitive to output VSWR. It features a wide dynamic-range (20 dB) with dB-wise linear operation. The on-chip power detector provides a reliable solution to board-level power control.

The Rx chain provides typically 12 dB gain with 2.5 dB noise figure. With the LNA bypassed, the receiver loss is typically 9 dB.

SST12LF09 is offered in a 16-contact X2QFN package. See Figure 3-1 for pin assignments and Table 4-1 for pin descriptions.

© 2013 Microchip Technology Inc.

TO OUR VALUED CUSTOMERS

It is our intention to provide our valued customers with the best documentation possible to ensure successful use of your Microchip products. To this end, we will continue to improve our publications to better suit your needs. Our publications will be refined and enhanced as new volumes and updates are introduced.

If you have any questions or comments regarding this publication, please contact the Marketing Communications Department via E-mail at **docerrors@microchip.com**. We welcome your feedback.

Most Current Data Sheet

To obtain the most up-to-date version of this data sheet, please register at our Worldwide Web site at:

http://www.microchip.com

You can determine the version of a data sheet by examining its literature number found on the bottom outside corner of any page. The last character of the literature number is the version number, (e.g., DS30000000A is version A of document DS30000000).

Errata

An errata sheet, describing minor operational differences from the data sheet and recommended workarounds, may exist for current devices. As device/documentation issues become known to us, we will publish an errata sheet. The errata will specify the revision of silicon and revision of document to which it applies.

To determine if an errata sheet exists for a particular device, please check with one of the following:

- Microchip's Worldwide Web site; **http://www.microchip.com**
- Your local Microchip sales office (see last page)

When contacting a sales office, please specify which device, revision of silicon and data sheet (include literature number) you are using.

Customer Notification System

Register on our web site at **www.microchip.com** to receive the most current information on all of our products.

© 2013 Microchip Technology Inc.

2.0 FUNCTIONAL BLOCKS

FIGURE 2-1: FUNCTIONAL BLOCK DIAGRAM

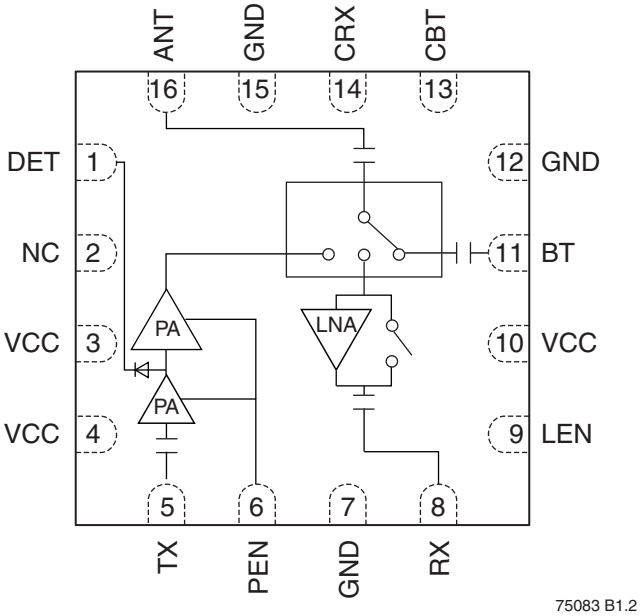

3.0 PIN ASSIGNMENTS

FIGURE 3-1: PIN ASSIGNMENTS FOR 16-CONTACT X2QFN

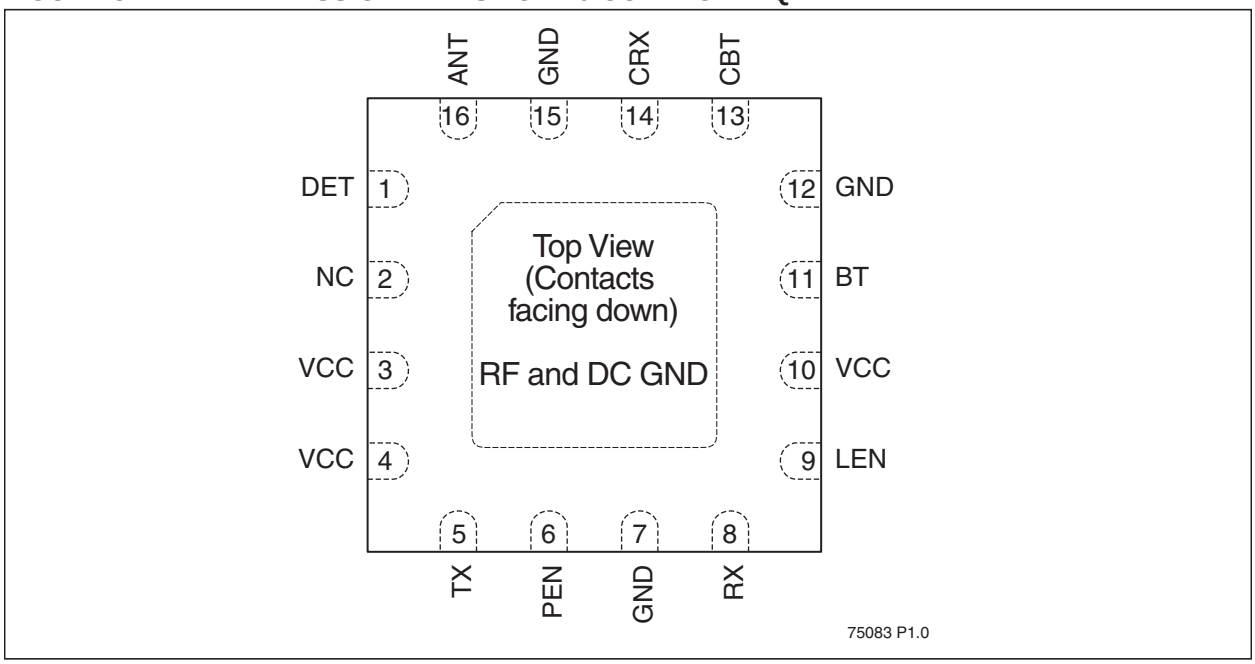

4.0 PIN DESCRIPTIONS

TABLE 4-1: PIN DESCRIPTION

Symbol	Pin No.	Pin Name	Type[1]	Function
DET	1		O	Detector output voltage ground
NC	2			No connect
VCC	3	Power Supply	PWR	Supply voltage
VCC	4	Power Supply	PWR	Supply voltage
TX	5		I	RF transmit input
PEN	6		I	PA enable
GND	7	Ground		Ground pad
RX	8		O	Rx output
LEN	9		I	LNA enable
VCC	10		PWR	Supply voltage
BT	11		I/O	Bluetooth RF port
GND	12	Ground		Ground pad
CBT	13		I	Bluetooth switch control
CRX	14		I	Receiver switch control voltage
GND	15	Ground		Ground Pad
ANT	16		I/O	Antenna

1. I=Input, O=Output

© 2013 Microchip Technology Inc.

5.0 ELECTRICAL SPECIFICATIONS

The DC and RF specifications for the power amplifier are specified below. Refer to Table 5-2 for the DC voltage and current specifications.

Absolute Maximum Stress Ratings (Applied conditions greater than those listed under "Absolute Maximum Stress Ratings" may cause permanent damage to the device. This is a stress rating only and functional operation of the device at these conditions or conditions greater than those defined in the operational sections of this data sheet is not implied. Exposure to absolute maximum stress rating conditions may affect device reliability.)

Tx input power to pin 5 (TX) . . . . . +5 dBm
Rx input power to pin 16 (ANT with LNA ON) . . . . . +5 dBm
Average Tx output power from pin 16 (ANT)[1] . . . . . +26 dBm
Supply Voltage at pins 3 and 4 (V_{CC}) . . . . . -0.3V to +5.5V
PA Enable Voltage to pin 6 (PEN) . . . . . -0.3V to +3.6V
DC supply current (I_{CC})[2] . . . . . 400 mA
Operating Temperature (T_A) . . . . . -40ºC to +85ºC
Storage Temperature (T_{STG}) . . . . . -40ºC to +120ºC
Maximum Junction Temperature (T_J) . . . . . +150ºC
Surface Mount Solder Reflow Temperature . . . . . 260°C for 10 seconds

1. Never measure with CW source. Pulsed single-tone source with <50% duty cycle is recommended. Exceeding the maximum rating of average output power could cause permanent damage to the device.
2. Measured with 100% duty cycle 54 Mbps 802.11g OFDM Signal

TABLE 5-1: OPERATING RANGE

Range	Ambient Temp	V_{CC}
Extended	-40°C to +85°C	3.0-5.0V

TABLE 5-2: DC ELECTRICAL CHARACTERISTICS AT 25°C FOR TX CHAIN

Symbol	Parameter	Min.	Typ	Max.	Unit
V_{CC}	Supply Voltage, V_{CC}	3.0	3.6	5.0	V
I_{CQ}	Tx Idle current for V_{CC} = 3.6V		90		mA
	Tx Idle current for V_{CC} = 5.0V		95		mA
V_{PEN}	Tx Enable Voltage	3.05	3.10	3.15	V
I_{CC}	Tx Supply Current for 11g OFDM 54 Mbps signal:				
	P_{OUT} = 17 dBm at V_{CC} = 3.6V		150		mA
	P_{OUT} = 18 dBm at V_{CC} = 5.0V		160		mA
I_{DD}	Rx Supply Current (with LNA ON)		9		mA

TABLE 5-3: TX CHAIN RF CHARACTERISTICS AT V_{CC} = 3.6V, PEN=3.1V, 25°C

Symbol	Parameter	Min.	Typ	Max.	Unit
F_{L-U}	Frequency range	2.4		2.5	GHz
Linearity,	Output Power with <3% EVM, 802.11g @ 54 Mbps OFDM		17		dBm
	Output Power level 1.75% Dynamic EVM, 256 QAM, 40 MHz		15		dBm
	Output Power level 2.5% Dynamic EVM, 802.11n, HT40		16		dBm
	Spectrum Mask compliance, IEEE802.11b		21		dBm
G	Gain	22	24		dB
RL_{IN}	Input return loss at TX port		14		dB
V_{DET}	Power detector output voltage at P_{OUT}=5 dBm, IEEE802.11g	0.25		0.35	V
	Power detector output voltage at P_{OUT}= 20 dBm,	0.55		0.65	V
2f, 3f, 4f, 5f	Harmonics at 17 dBm			-30	dBm/ MHz

TABLE 5-4: TX CHAIN RF CHARACTERISTICS AT V_{CC} = 5.0V, PEN=3.1V, 25°C

Symbol	Parameter	Min.	Typ	Max.	Unit
F_{L-U}	Frequency range	2.4		2.5	GHz
Linearity,	Output Power with <3% EVM, 802.11g @ 54 Mbps OFDM		18		dBm
	Output Power level 1.75% Dynamic EVM, 256 QAM, 40 MHz		16		dBm
	Output Power level 2.5% Dynamic EVM, 802.11n, HT40		17		dBm
	Spectrum Mask compliance, IEEE802.11b		22		dBm
G	Gain	22	24		dB
RL_{IN}	Input return loss at TX port		14		dB
V_{DET}	Power detector output voltage at P_{OUT}=5 dBm, IEEE802.11g	0.25		0.35	V
V_{DET}	Power detector output voltage at P_{OUT}= 20 dBm,	0.55		0.65	V
2f, 3f, 4f, 5f	Harmonics at 17 dBm			-30	dBm/ MHz

TABLE 5-5: RX CHAIN RF CHARACTERISTICS AT V_{CC} = 3.6V–5V, LEN=3.1V, CRX = 3.1V, 25°C

Symbol	Parameter	Min.	Typ	Max.	Unit
F_{L-U}	Frequency range	2.4		2.5	GHz
G	Gain, with LNA ON		12		dB
NF	Noise figure, with LNA ON		2.5		dB
IP1dB	Input P1dB, with LNA ON		-6		dBm
Loss	LNA bypass loss		9		dB
RL_{IN}	Input return loss at Antenna port with LNA		12		dB

TABLE 5-6: BLUETOOTH CHAIN RF CHARACTERISTICS AT V_{CC} = 3.6V–5V, CBT=3.1V, 25°C

Symbol	Parameter	Min.	Typ	Max.	Unit
F_{L-U}	Frequency range	2.4		2.5	GHz
L	Loss		1.6		dB
RL	Return Loss		8		dB

© 2013 Microchip Technology Inc.

TABLE 5-7: CONTROL VOLTAGES[1]

Function	PEN	CRX	LEN	CBT
Transmit mode	3.1V	0	0	0
Bluetooth	0	0	0	3V
Receive mode, LNA on	0	3V	3V	0
Receive mode, LNA bypass	0	3V	0	0
OFF	0	0	0	0

1. No other operating modes are allowed

6.0 TYPICAL PERFORMANCE CHARACTERISTICS

6.1 Transmitter

Test Conditions: V_{CC} = 3.6V, PEN = 3.10V, LEN = 0V, CRX = 0V, CBT = 0V, T_A = 25°C, unless otherwise specified

FIGURE 6-1: S-PARAMETERS

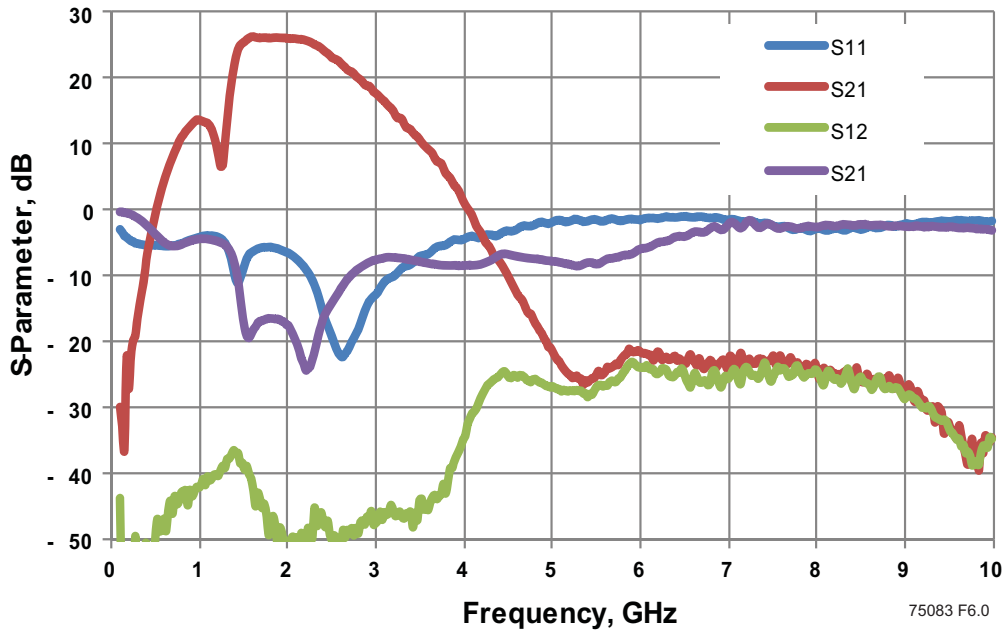

FIGURE 6-2: TRANSMITTER EVM VERSUS OUTPUT POWER MEASURED USING 802.11G WITH EQUALIZER TRAINING USING SEQUENCE ONLY

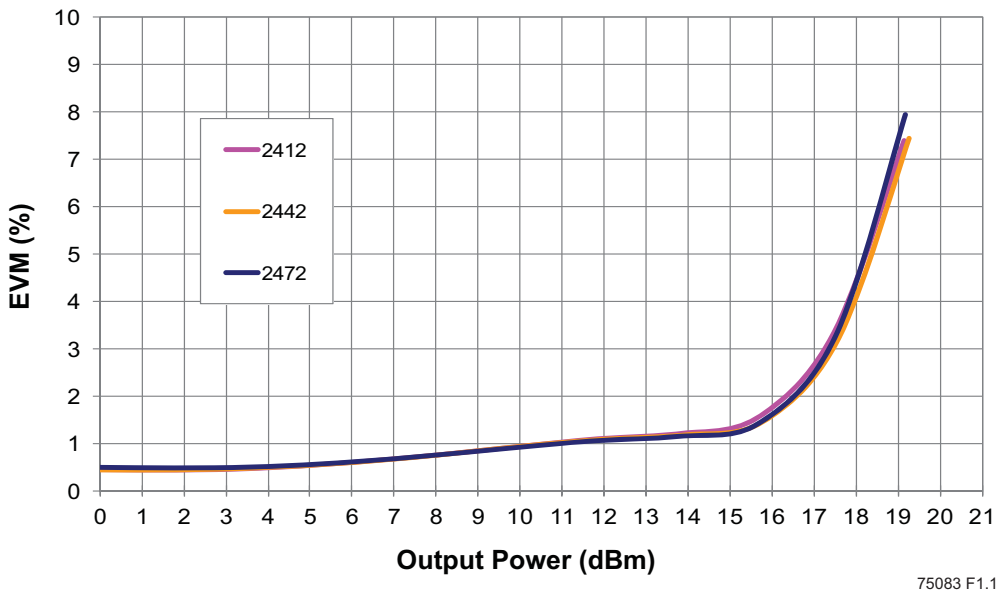

© 2013 Microchip Technology Inc.

FIGURE 6-3: TRANSMITTER DYNAMIC EVM VERSUS OUTPUT POWER MEASURED USING 256 QAM, 40 MHZ BANDWIDTH WITH EQUALIZER TRAINING USING SEQUENCE ONLY

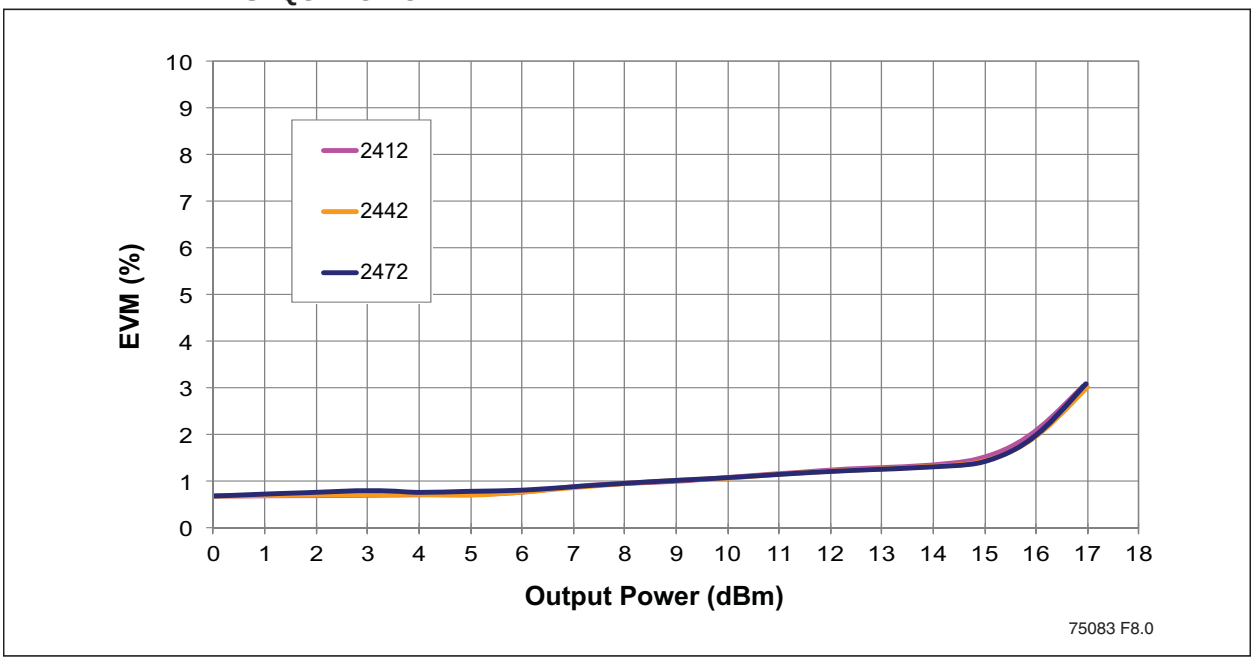

FIGURE 6-4: GAIN VERSUS OUTPUT POWER

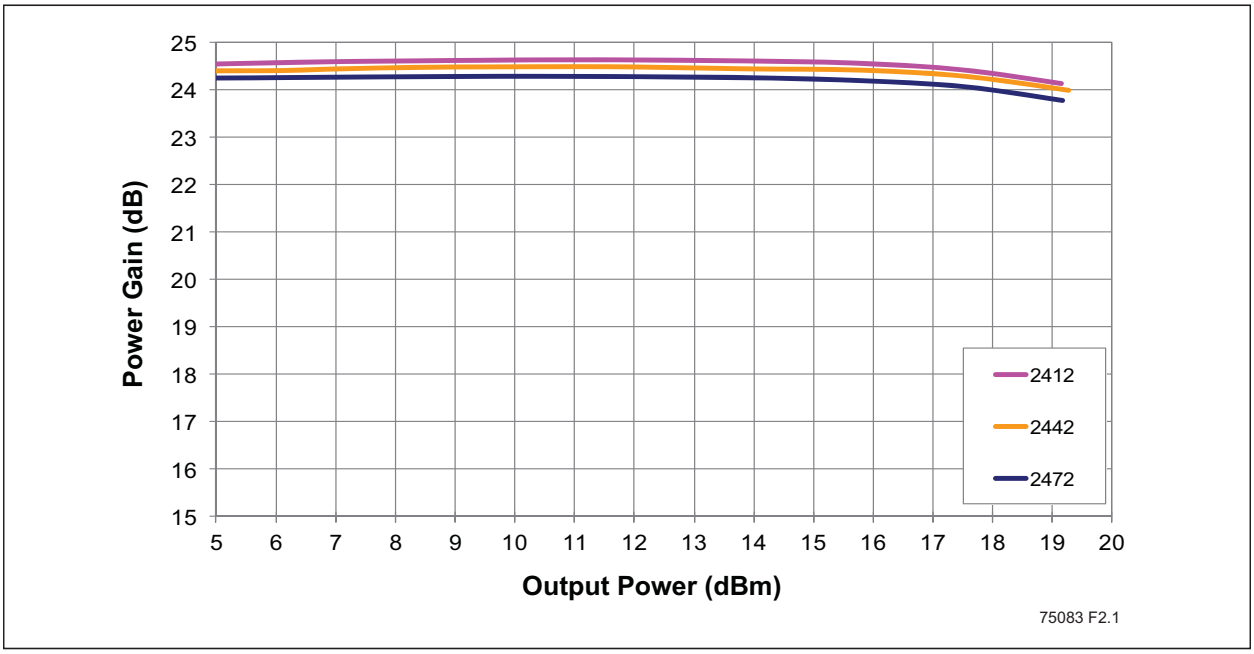

FIGURE 6-5: TRANSMITTER DC CURRENT VERSUS OUTPUT POWER

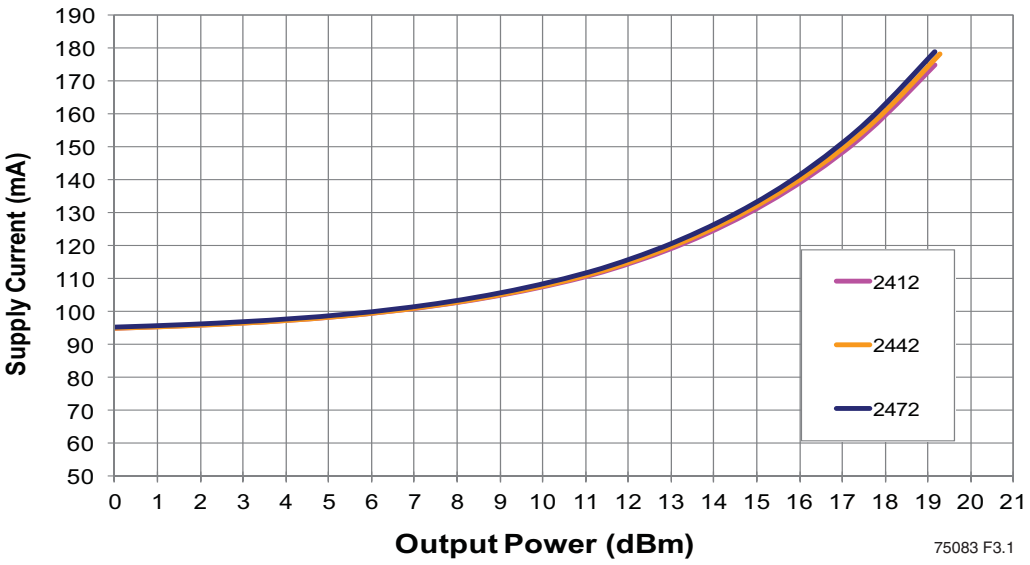

FIGURE 6-6: DETECTOR VOLTAGE VERSUS OUTPUT POWER

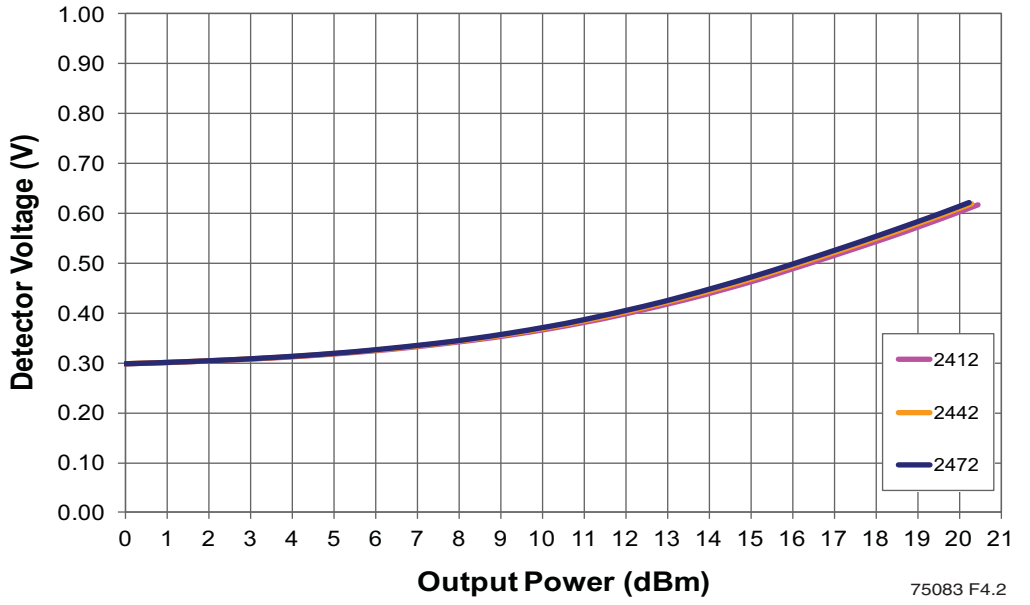

© 2013 Microchip Technology Inc.

6.2 Receiver

Test Conditions: V_{CC} = 3.6V, LEN = 3.3V, CRX = 3.3V, PEN = 0V, CBT = 0V, T_A = 25°C, unless otherwise specified

FIGURE 6-7: RECEIVER S-PARAMETER

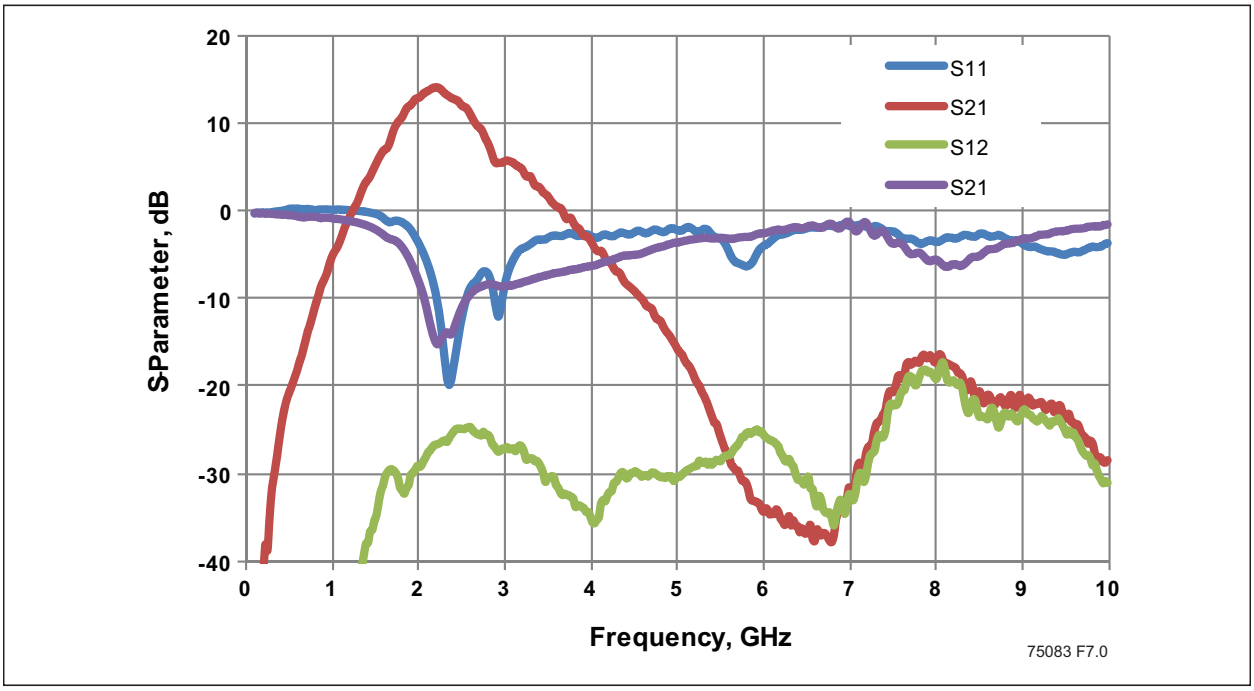

FIGURE 6-8: RECEIVER NOISE FIGURE

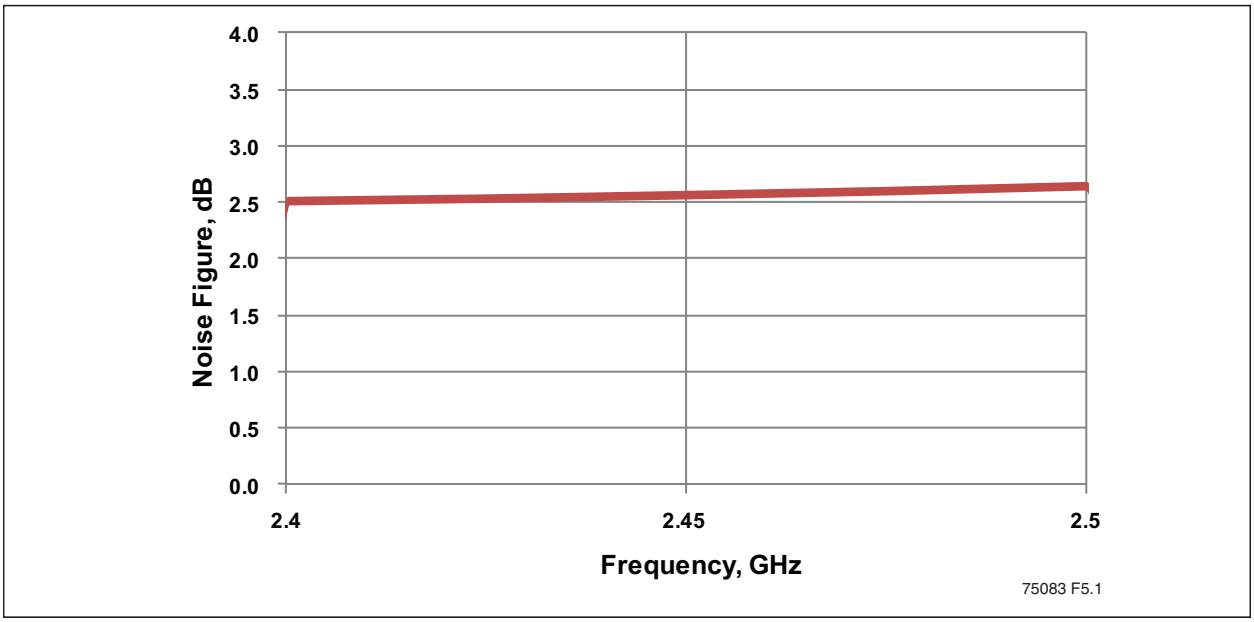

FIGURE 6-9: TYPICAL SCHEMATIC

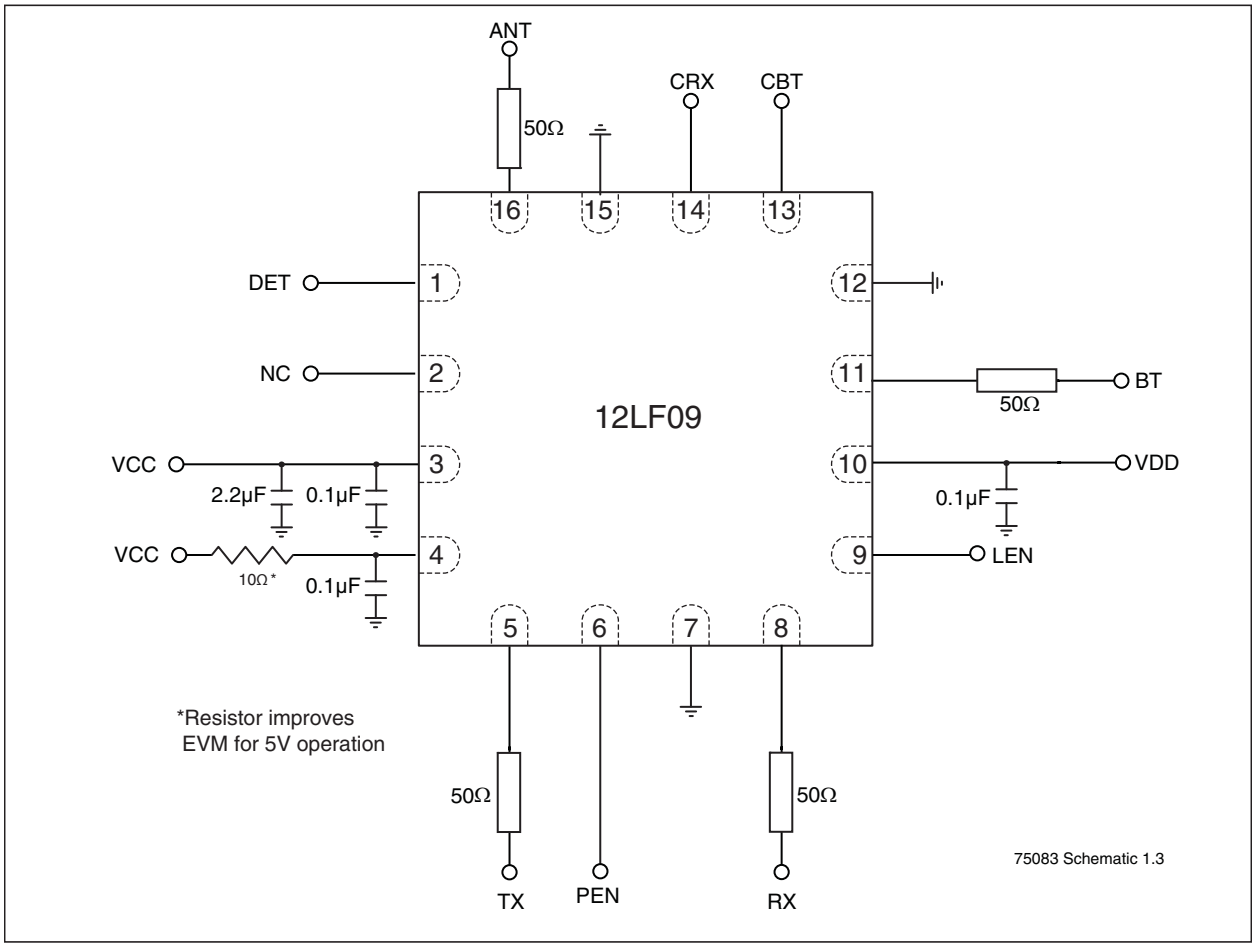

© 2013 Microchip Technology Inc.

7.0 PACKAGING DIAGRAMS

16-Lead Super-Thin Quad Flatpack No-Leads (Q3CE/F) - 2.5x2.5 mm Body [X2QFN]

Note: For the most current package drawings, please see the Microchip Packaging Specification located at http://www.microchip.com/packaging

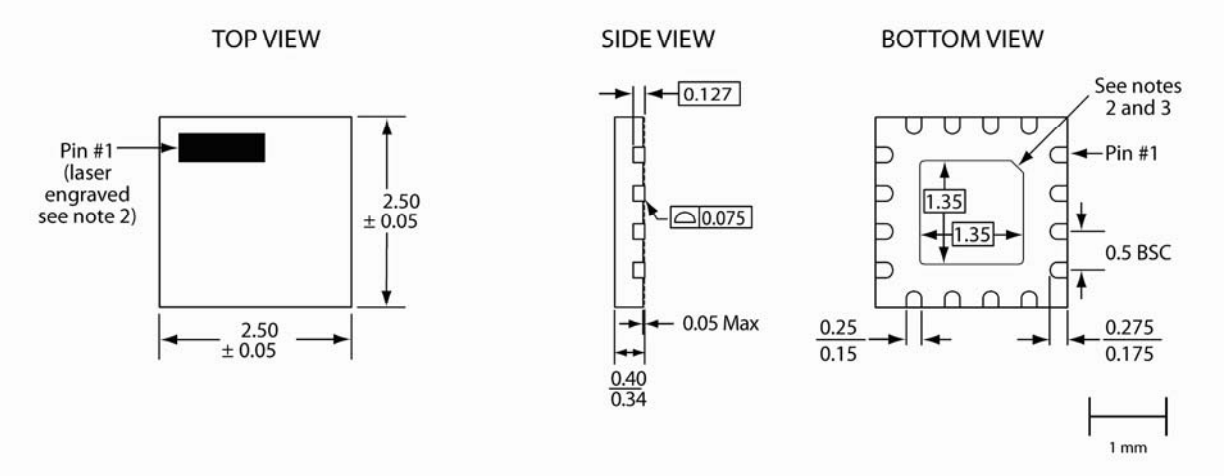

16-x2qfn-2.5x2.5-Q3C-2.0

Note:

1. From the bottom view, the pin #1 indicator may be either a 45-degree chamfer or a half-circle notch.
2. The topside pin #1 indicator is laser engraved; its approximate shape and location is as shown.
3. The external paddle is electrically connected to the die back-side and to VSS.
   This paddle must be soldered to the PC board; it is required to connect this paddle to the VSS of the unit.
   Connection of this paddle to any other voltage potential will result in shorts and electrical malfunction of the device.
4. Untoleranced dimensions are nominal target dimensions.
5. All linear dimensions are in millimeters (max/min).

Microchip Technology Drawing C04-14017A Sheet 1 of 1

TABLE 7-1: REVISION HISTORY

Revision	Description	Date
A	• Initial release of data sheet	May 2013
B	• Revised "Features" on page 1 • Updated Tables 5-2, 5-3, 5-5, 5-6 • Updated Figure 6-6 on page 10 and Figure 6-9 on page 12 • Changed V_{DD} to V_{CC} throughout • Updated Figure 2-1 on page 3	Dec 2013

© 2013 Microchip Technology Inc.

THE MICROCHIP WEB SITE

Microchip provides online support via our WWW site at www.microchip.com. This web site is used as a means to make files and information easily available to customers. Accessible by using your favorite Internet browser, the web site contains the following information:

- **Product Support** – Data sheets and errata, application notes and sample programs, design resources, user's guides and hardware support documents, latest software releases and archived software
- **General Technical Support** – Frequently Asked Questions (FAQ), technical support requests, online discussion groups, Microchip consultant program member listing
- **Business of Microchip** – Product selector and ordering guides, latest Microchip press releases, listing of seminars and events, listings of Microchip sales offices, distributors and factory representatives

CUSTOMER CHANGE NOTIFICATION SERVICE

Microchip's customer notification service helps keep customers current on Microchip products. Subscribers will receive e-mail notification whenever there are changes, updates, revisions or errata related to a specified product family or development tool of interest.

To register, access the Microchip web site at www.microchip.com. Under "Support", click on "Customer Change Notification" and follow the registration instructions.

CUSTOMER SUPPORT

Users of Microchip products can receive assistance through several channels:

- Distributor or Representative
- Local Sales Office
- Field Application Engineer (FAE)
- Technical Support

Customers should contact their distributor, representative or Field Application Engineer (FAE) for support Local sales offices are also available to help customers. A listing of sales offices and locations is included in the back of this document.

Technical support is available through the web site at: http://microchip.com/support

8.0 PRODUCT IDENTIFICATION SYSTEM

To order or obtain information, e.g., on pricing or delivery, refer to the factory or the listed sales office.

PART NO. **XXX**

Device **Package**

Device:	SST12LF09	= 2.4 GHz High-Gain, High-Efficiency Front-end Module
Package:	Q3CE	= X2QFN (2.5mm x 2.5mm), 0.4 max thickness 16-contact
Evaluation Kit Flag	K	= Evaluation Kit

Valid Combinations:

SST12LF09-Q3CE
SST12LF09-Q3CE-K

© 2013 Microchip Technology Inc.

Note the following details of the code protection feature on Microchip devices:

- Microchip products meet the specification contained in their particular Microchip Data Sheet.
- Microchip believes that its family of products is one of the most secure families of its kind on the market today, when used in the intended manner and under normal conditions.
- There are dishonest and possibly illegal methods used to breach the code protection feature. All of these methods, to our knowledge, require using the Microchip products in a manner outside the operating specifications contained in Microchip's Data Sheets. Most likely, the person doing so is engaged in theft of intellectual property.
- Microchip is willing to work with the customer who is concerned about the integrity of their code.
- Neither Microchip nor any other semiconductor manufacturer can guarantee the security of their code. Code protection does not mean that we are guaranteeing the product as "unbreakable."

Code protection is constantly evolving. We at Microchip are committed to continuously improving the code protection features of our products. Attempts to break Microchip's code protection feature may be a violation of the Digital Millennium Copyright Act. If such acts allow unauthorized access to your software or other copyrighted work, you may have a right to sue for relief under that Act.

Information contained in this publication regarding device applications and the like is provided only for your convenience and may be superseded by updates. It is your responsibility to ensure that your application meets with your specifications. MICROCHIP MAKES NO REPRESENTATIONS OR WARRANTIES OF ANY KIND WHETHER EXPRESS OR IMPLIED, WRITTEN OR ORAL, STATUTORY OR OTHERWISE, RELATED TO THE INFORMATION, INCLUDING BUT NOT LIMITED TO ITS CONDITION, QUALITY, PERFORMANCE, MERCHANTABILITY OR FITNESS FOR PURPOSE**.** Microchip disclaims all liability arising from this information and its use. Use of Microchip devices in life support and/or safety applications is entirely at the buyer's risk, and the buyer agrees to defend, indemnify and hold harmless Microchip from any and all damages, claims, suits, or expenses resulting from such use. No licenses are conveyed, implicitly or otherwise, under any Microchip intellectual property rights.

QUALITY MANAGEMENT SYSTEM
CERTIFIED BY DNV
═ ISO/TS 16949 ═

Trademarks

The Microchip name and logo, the Microchip logo, dsPIC, FlashFlex, KEELOQ, KEELOQ logo, MPLAB, PIC, PICmicro, PICSTART, PIC^{32} logo, rfPIC, SST, SST Logo, SuperFlash and UNI/O are registered trademarks of Microchip Technology Incorporated in the U.S.A. and other countries.

FilterLab, Hampshire, HI-TECH C, Linear Active Thermistor, MTP, SEEVAL and The Embedded Control Solutions Company are registered trademarks of Microchip Technology Incorporated in the U.S.A.

Silicon Storage Technology is a registered trademark of Microchip Technology Inc. in other countries.

Analog-for-the-Digital Age, Application Maestro, BodyCom, chipKIT, chipKIT logo, CodeGuard, dsPICDEM, dsPICDEM.net, dsPICworks, dsSPEAK, ECAN, ECONOMONITOR, FanSense, HI-TIDE, In-Circuit Serial Programming, ICSP, Mindi, MiWi, MPASM, MPF, MPLAB Certified logo, MPLIB, MPLINK, mTouch, Omniscient Code Generation, PICC, PICC-18, PICDEM, PICDEM.net, PICkit, PICtail, REAL ICE, rfLAB, Select Mode, SQI, Serial Quad I/O, Total Endurance, TSHARC, UniWinDriver, WiperLock, ZENA and Z-Scale are trademarks of Microchip Technology Incorporated in the U.S.A. and other countries.

SQTP is a service mark of Microchip Technology Incorporated in the U.S.A.

GestIC and ULPP are registered trademarks of Microchip Technology Germany II GmbH & Co. & KG, a subsidiary of Microchip Technology Inc., in other countries.

All other trademarks mentioned herein are property of their respective companies.

© 2013, Microchip Technology Incorporated, Printed in the U.S.A., All Rights Reserved.

Printed on recycled paper.

ISBN:978-1-62077-683-4

World Wide Sales and Service

AMERICAS

Corporate Office
2355 West Chandler Blvd.
Chandler, AZ 85224-6199
Tel: 480-792-7200
Fax: 480-792-7277
Technical Support:
http://www.microchip.com/support
Web Address:
www.microchip.com

Atlanta
Duluth, GA
Tel: 678-957-9614
Fax: 678-957-1455

Boston
Westborough, MA
Tel: 774-760-0087
Fax: 774-760-0088

Chicago
Itasca, IL
Tel: 630-285-0071
Fax: 630-285-0075

Cleveland
Independence, OH
Tel: 216-447-0464
Fax: 216-447-0643

Dallas
Addison, TX
Tel: 972-818-7423
Fax: 972-818-2924

Detroit
Farmington Hills, MI
Tel: 248-538-2250
Fax: 248-538-2260

Indianapolis
Noblesville, IN
Tel: 317-773-8323
Fax: 317-773-5453

Los Angeles
Mission Viejo, CA
Tel: 949-462-9523
Fax: 949-462-9608

Santa Clara
Santa Clara, CA
Tel: 408-961-6444
Fax: 408-961-6445

Toronto
Mississauga, Ontario,
Canada
Tel: 905-673-0699
Fax: 905-673-6509

ASIA/PACIFIC

Asia Pacific Office
Suites 3707-14, 37th Floor
Tower 6, The Gateway
Harbour City, Kowloon
Hong Kong
Tel: 852-2401-1200
Fax: 852-2401-3431

Australia - Sydney
Tel: 61-2-9868-6733
Fax: 61-2-9868-6755

China - Beijing
Tel: 86-10-8569-7000
Fax: 86-10-8528-2104

China - Chengdu
Tel: 86-28-8665-5511
Fax: 86-28-8665-7889

China - Chongqing
Tel: 86-23-8980-9588
Fax: 86-23-8980-9500

China - Hangzhou
Tel: 86-571-2819-3187
Fax: 86-571-2819-3189

China - Hong Kong SAR
Tel: 852-2943-5100
Fax: 852-2401-3431

China - Nanjing
Tel: 86-25-8473-2460
Fax: 86-25-8473-2470

China - Qingdao
Tel: 86-532-8502-7355
Fax: 86-532-8502-7205

China - Shanghai
Tel: 86-21-5407-5533
Fax: 86-21-5407-5066

China - Shenyang
Tel: 86-24-2334-2829
Fax: 86-24-2334-2393

China - Shenzhen
Tel: 86-755-8864-2200
Fax: 86-755-8203-1760

China - Wuhan
Tel: 86-27-5980-5300
Fax: 86-27-5980-5118

China - Xian
Tel: 86-29-8833-7252
Fax: 86-29-8833-7256

China - Xiamen
Tel: 86-592-2388138
Fax: 86-592-2388130

China - Zhuhai
Tel: 86-756-3210040
Fax: 86-756-3210049

ASIA/PACIFIC

India - Bangalore
Tel: 91-80-3090-4444
Fax: 91-80-3090-4123

India - New Delhi
Tel: 91-11-4160-8631
Fax: 91-11-4160-8632

India - Pune
Tel: 91-20-3019-1500

Japan - Osaka
Tel: 81-6-6152-7160
Fax: 81-6-6152-9310

Japan - Tokyo
Tel: 81-3-6880- 3770
Fax: 81-3-6880-3771

Korea - Daegu
Tel: 82-53-744-4301
Fax: 82-53-744-4302

Korea - Seoul
Tel: 82-2-554-7200
Fax: 82-2-558-5932 or
82-2-558-5934

Malaysia - Kuala Lumpur
Tel: 60-3-6201-9857
Fax: 60-3-6201-9859

Malaysia - Penang
Tel: 60-4-227-8870
Fax: 60-4-227-4068

Philippines - Manila
Tel: 63-2-634-9065
Fax: 63-2-634-9069

Singapore
Tel: 65-6334-8870
Fax: 65-6334-8850

Taiwan - Hsin Chu
Tel: 886-3-5778-366
Fax: 886-3-5770-955

Taiwan - Kaohsiung
Tel: 886-7-213-7828
Fax: 886-7-330-9305

Taiwan - Taipei
Tel: 886-2-2508-8600
Fax: 886-2-2508-0102

Thailand - Bangkok
Tel: 66-2-694-1351
Fax: 66-2-694-1350

EUROPE

Austria - Wels
Tel: 43-7242-2244-39
Fax: 43-7242-2244-393

Denmark - Copenhagen
Tel: 45-4450-2828
Fax: 45-4485-2829

France - Paris
Tel: 33-1-69-53-63-20
Fax: 33-1-69-30-90-79

Germany - Munich
Tel: 49-89-627-144-0
Fax: 49-89-627-144-44

Italy - Milan
Tel: 39-0331-742611
Fax: 39-0331-466781

Netherlands - Drunen
Tel: 31-416-690399
Fax: 31-416-690340

Spain - Madrid
Tel: 34-91-708-08-90
Fax: 34-91-708-08-91

UK - Wokingham
Tel: 44-118-921-5869
Fax: 44-118-921-5820