A Microchip Technology Company

2.4 GHz Front-End Module
SST12LF01

Data Sheet

The SST12LF01 is a 2.4 GHz Front-End Module (FEM) that combines a high-performance Low-Noise Amplifier (LNA) and a Power Amplifier (PA). Designed in compliance with IEEE 802.11 b/g/n applications and based on GaAs PHEMT/HBT technology, the SST12LF01 operates within the frequency range of 2.4- 2.55 GHz at a very low DC-current consumption. The Transmitter chain has excellent linearity, typically <3% added EVM up to 19 dBm output power, which is essential for 54 Mbps 802.11g operation while meeting 802.11g spectrum mask at 23 dBm. The SST12LF01 is offered in a 24-contact WQFN package.

Features

- **Gain:**
  - Typically 12 dB gain across 2.4–2.5 GHz for Receiver (RX) chain.
  - Typically 29 dB gain across 2.4–2.5 GHz over temperature 0°C to +80°C for Transmitter (TX) chain.
- **Low-Noise Figure**
  - Typical 1.45 dB across 2.4–2.55 GHz
- **50 Ω Input/Output matched along RX chain.**
- **Rx IIP3**
  - >1 dbm across 2.4–2.55 GHz
- **High linear output power:**
  - >26.5 dBm P1dB
  - Meets 802.11g OFDM ACPR requirement up to 23 dBm
  - ~3% added EVM up to 19 dBm for 54 Mbps 802.11g signal
  - Meets 802.11b ACPR requirement up to 24 dBm
- **High power-added efficiency/Low operating current for both 802.11g/b applications**
  - ~22%/210 mA @ P_{OUT} = 22 dBm for 802.11g
  - ~26%/240 mA @ P_{OUT} = 23.5 dBm for 802.11b
- **Low idle current**
  - ~70 mA I_{CQ}
- **Low shut-down current (Typical 2.5 µA)**
- **Built-in, Ultra-low I_{REF} power-up/down control**
  - I_{REF} <4 mA
- **High-speed power-up/down**
  - Turn on/off time (10%- 90%) <100 ns
  - Typical power-up/down delay with driver delay included <200 ns
- **High temperature stability**
  - ~1 dB gain/power variation between 0°C to +85°C
- **Simple input/output matching**
- **Single positive power supply**
- **Packages available**
  - 24-contact WQFN – 4mm x 4mm
- **All devices are RoHS compliant**

Applications

- **WLAN**
- **Bluetooth**
- **Wireless Network**

PROPRIETARY AND CONFIDENTIAL

Product Description

The SST12LF01 is a 2.4 GHz Front-End Module (FEM) that combines a high-performance Low-Noise Amplifier (LNA) and a Power Amplifier (PA).

Designed in compliance with IEEE 802.11 b/g/n applications and based on GaAs PHEMT/HBT technology, the SST12LF01 operates within the frequency range of 2.4–2.55 GHz at a very low DC-current consumption. There are two components to the FEM: the Receiver (RX) chain and the Transmitter (TX) chain.

The RX chain consist of a cost effective Low-Noise Amplifier (LNA) cell which requires no external RF-matching components. This device is based on the 0.5m GaAs PHEMT technology, and complies with 802.11 b/g/n applications.

The LNA provides high-performance, low-noise, and moderate gain operation within the 2.4–2.55 GHz frequency band. Across this frequency band, the LNA typically provides 12 dB gain and 1.45 dB noise figure.

This LNA cell is designed with a self DC-biasing scheme, which maintains low DC current consumption, nominally at 11 mA, during operation. Optimum performance is achieved with only a single power supply and no external bias resistors or networks are required. The input and output ports are single-ended 50 Ohm matched. RF ports are also DC isolated requiring no dc blocking capacitors or matching components to reduce system board Bill of Materials (BOM) cost.

The TX chain includes a high-efficiency PA based on InGaP/GaAs HBT technology. The PA typically provides 30 dB gain with 22% power-added efficiency at P_{OUT} = 22 dBm for 802.11g and 27% power-added efficiency at P_{OUT} = 24 dBm for 802.11b.

The Transmitter chain has excellent linearity, typically <4% added EVM up to 20 dBm output power, which is essential for 54 Mbps 802.11g operation while meeting 802.11g spectrum mask at 23 dBm.

The SST12LF01 is offered in 24-contact WQFN package. See Figure 2 for pin assignments and Table 1 for pin descriptions.

PROPRIETARY AND CONFIDENTIAL

Functional Blocks

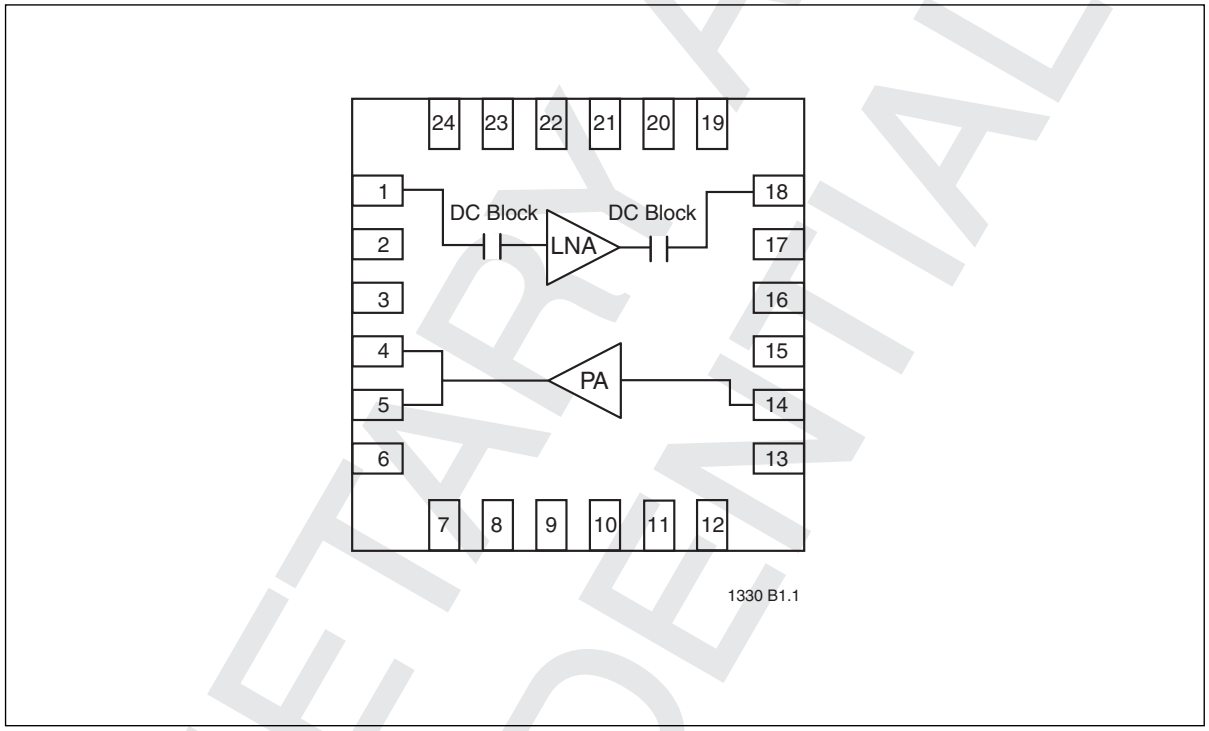

Figure 1: Functional Block Diagram

PROPRIETARY AND CONFIDENTIAL

Pin Assignments

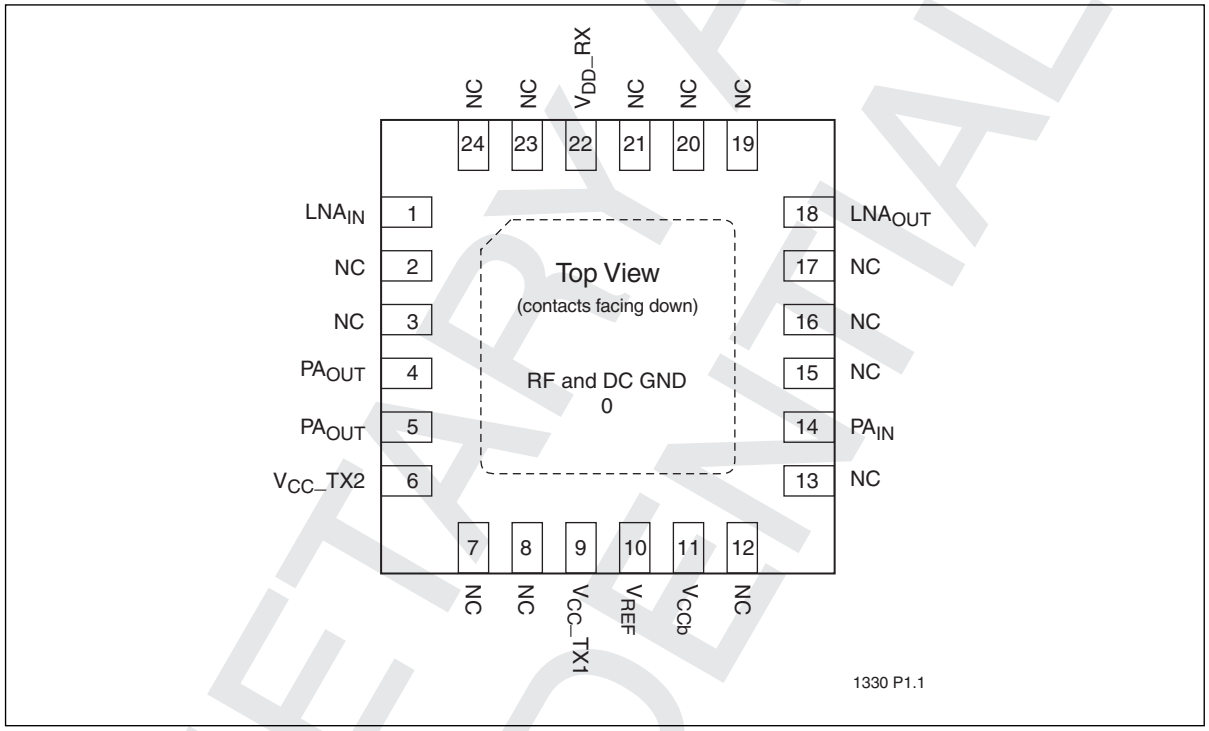

Figure 2: Pin Assignments for 24-contact WQFN

PROPRIETARY AND CONFIDENTIAL

Pin Descriptions

Table 1: Pin Description

Symbol	Pin No.	Pin Name	Type[1]	Function
LNA_{IN}	1		I	LNA RF Input
NC	2	No Connection		Unconnected pin
NC	3	No Connection		Unconnected pin
PA_{OUT}	4		O	PA RF output
PA_{OUT}	5		O	PA RF output
V_{CC}_TX2	6	Power Supply	PWR	PA power supply, 2nd stage
NC	7	No Connection		Unconnected pin
NC	8	No Connection		Unconnected pin
V_{CC}_TX1	9	Power Supply	PWR	PA power supply,1st stage
V_{REF}	10		PWR	PA-enable and current control
V_{CCb}	11	Power Supply	PWR	PA power supply, bias circuit
NC	12	No Connection		Unconnected pin
NC	13	No Connection		Unconnected pin
PA_{IN}	14		I	PA RF input
NC	15	No Connection		Unconnected pin
NC	16	No Connection		Unconnected pin
NC	17	No Connection		Unconnected pin
LNA_{OUT}	18		O	LNA RF Output
NC	19	No Connection		Unconnected pin
NC	20	No Connection		Unconnected pin
NC	21	No Connection		Unconnected pin
V_{DD}_RX	22	Power Supply	PWR	LNA power supply
NC	23	No Connection		Unconnected pin
NC	24	No Connection		Unconnected pin

T1.0 75040

1. I=Input, O=Output

PROPRIETARY AND CONFIDENTIAL

Electrical Specifications

The AC and DC specifications for the power amplifier interface signals. Refer to Table 3 for the DC voltage and current specifications. Refer to Figures 3 through 14 for the RF performance.

Absolute Maximum Stress Ratings (Applied conditions greater than those listed under "Absolute Maximum Stress Ratings" may cause permanent damage to the device. This is a stress rating only and functional operation of the device at these conditions or conditions greater than those defined in the operational sections of this data sheet is not implied. Exposure to absolute maximum stress rating conditions may affect device reliability.)

Input power to pins 1 (LNA) . . . . . 0 dBm
Input power to pins 14 (PA) . . . . . -5 dBm
Average output power pins 4 and 5 (P_{OUT})[1] . . . . . 24 dBm
Average output power pin 18 (P_{OUT})[1] . . . . . 9 dBm
Supply Voltage at pins 6, 9, and 11 (V_{CC}) . . . . . -0.3V to +4.6V
Supply Voltage at pin 22 (V_{DD}) . . . . . -0.3V to +4.6V
Reference voltage to pin 10 (V_{REF}) . . . . . -0.3V to +3.6V
DC supply current to pin 10 (I_{DD}) . . . . . 14 mA
DC supply current to pin 6, 9, and 11 (I_{CC}) . . . . . 300 mA
Operating Temperature (T_A) . . . . . -40°C to +85°C
Storage Temperature (T_{STG}) . . . . . -40°C to +120°C
Maximum Junction Temperature (T_J) . . . . . +150°C
Surface Mount Solder Reflow Temperature . . . . . 260°C for 10 seconds

1. Never measure with CW source. Pulsed single-tone source with <50% duty cycle is recommended. Exceeding the maximum rating of average output power could cause permanent damage to the device.

Table 2: Operating Range

Range	Ambient Temp	V_{CC} / V_{DD}
Commercial	-0 to 80°C	2.9–4.2V

T2.1 75040

Table 3: DC Electrical Characteristics

Symbol	Parameter	Min.	Typ	Max.	Unit
V_{CC}	Supply Voltage at pins 6, 9, 11, and 22		3.3	4.2	V
I_{CC}	Supply Current at pin 22		10		mA
	for 802.11g, 22 dBm at pins 6, 9, and 11		210		mA
	for 802.11b, 23.5 dBm at pins 6, 9, and 11		260		mA
I_{CQ}	Idle current for 802.11g to meet EVM<4% @ 20 dBm		75		mA
I_{OFF}	Shut down current		2.5		µA
V_{REF}[1]	Reference Voltage at pin10 with R_{REG} = 0Ω resistor		2.7		V
	Reference Voltage at pin 10 with R_{REG} = 120Ω resistor	2.7	2.9	3.1	V
	Reference Voltage at pin 10 with R_{REG} = 220Ω resistor	2.9	3.1	3.3	V

T3.1 75040

1. V_{REF} and V_{REG} are defined in Figure 15. Three combinations of resistor values and applied voltages of V_{REG} are suggested in Table 3.

PROPRIETARY AND CONFIDENTIAL

Table 4: AC Electrical Characteristics for RX Chain

Symbol	Parameter	Min.	Typ	Max.	Unit
F_{L-U}	Frequency range	2400		2550	MHz
G	Small signal gain	10	12		dB
NF	Noise Figure		1.45		dB
IIP3	2.4–2.55 GHz	1	3		dBm

T4.1 75040

Table 5: AC Electrical Characteristics for TX Chain

Symbol	Parameter	Min.	Typ	Max.	Unit
F_{L-U}	Frequency range	2400		2485	MHz
P_{OUT}	Output power				
	@ PIN = -6 dBm 11b signals	23			dBm
	@ PIN = -9 dBm 11g signals	20			dBm
G	Small signal gain	28	29	33	dB
G_{VAR1}	Gain variation over band (2400~2485 MHz)			±0.5	dB
G_{VAR2}	Gain ripple over channel (20 MHz)		0.2		dB
ACPR	Meet 11b spectrum mask	23			dBm
	Meet 11g OFDM 54 Mbps spectrum mask	22			dBm
Added EVM	@ 20 dBm output with 11g OFDM 54 Mbps signal		4		%
2f, 3f, 4f, 5f	Harmonics at 22 dBm, without external filters			-40	dBc

T5.1 75040

PROPRIETARY AND CONFIDENTIAL

Typical Performance Characteristics

Test Conditions: V_{DD} = 3.0V, T_A = 25°C, unless otherwise specified

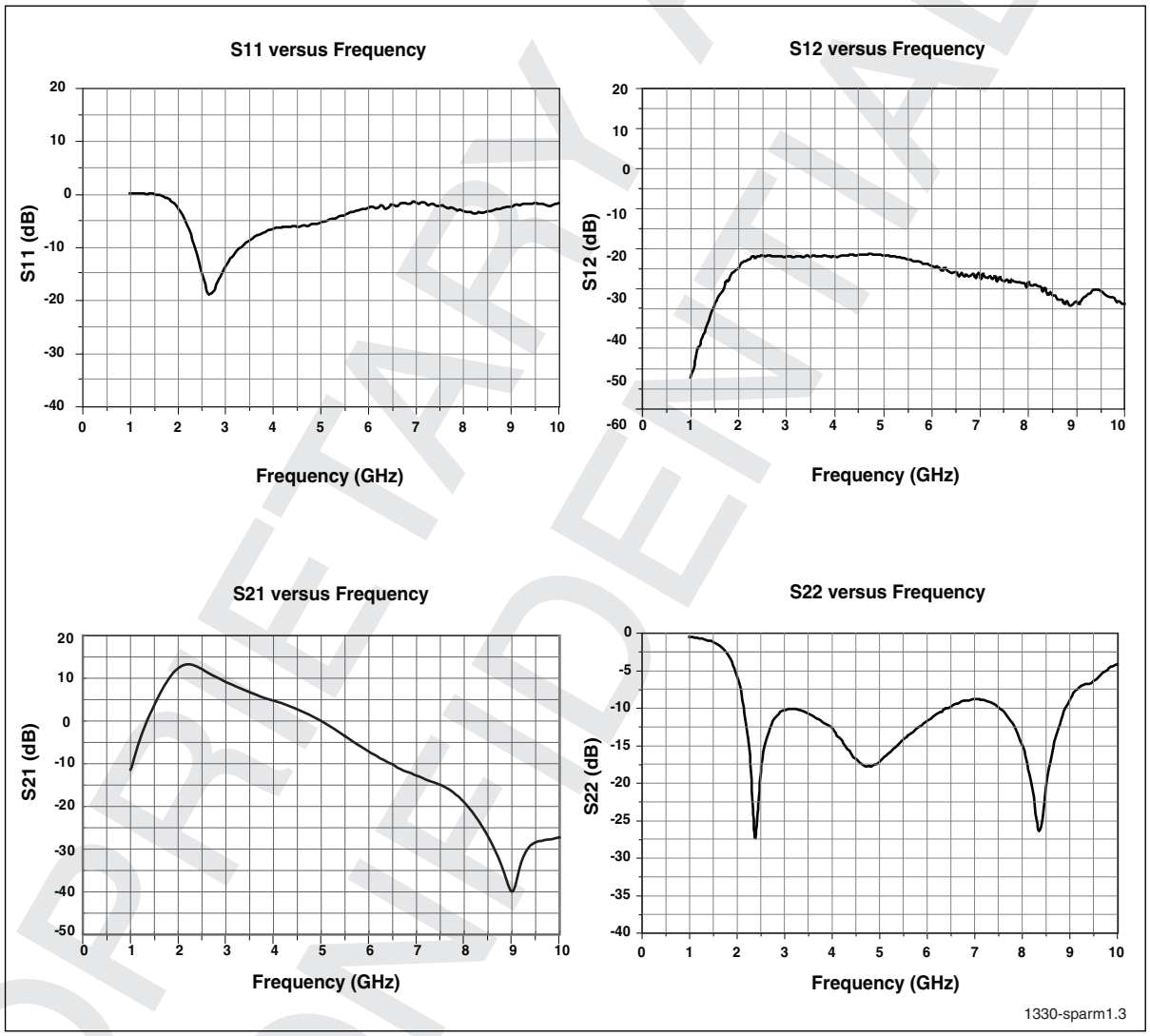

Figure 3: S-Parameters, RX Chain

PROPRIETARY AND CONFIDENTIAL

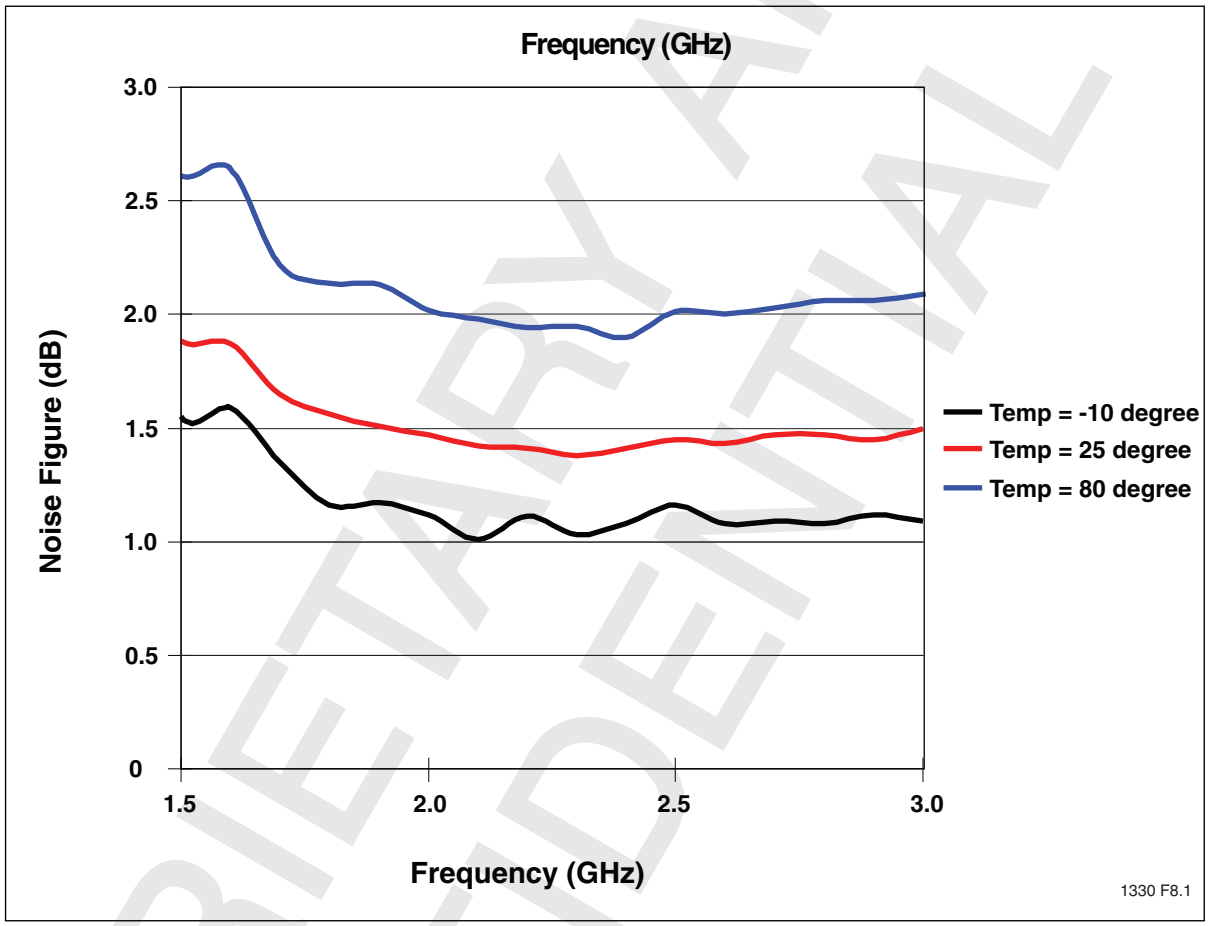

Figure 4: Noise Figure versus Frequency, RX Chain

PROPRIETARY AND CONFIDENTIAL

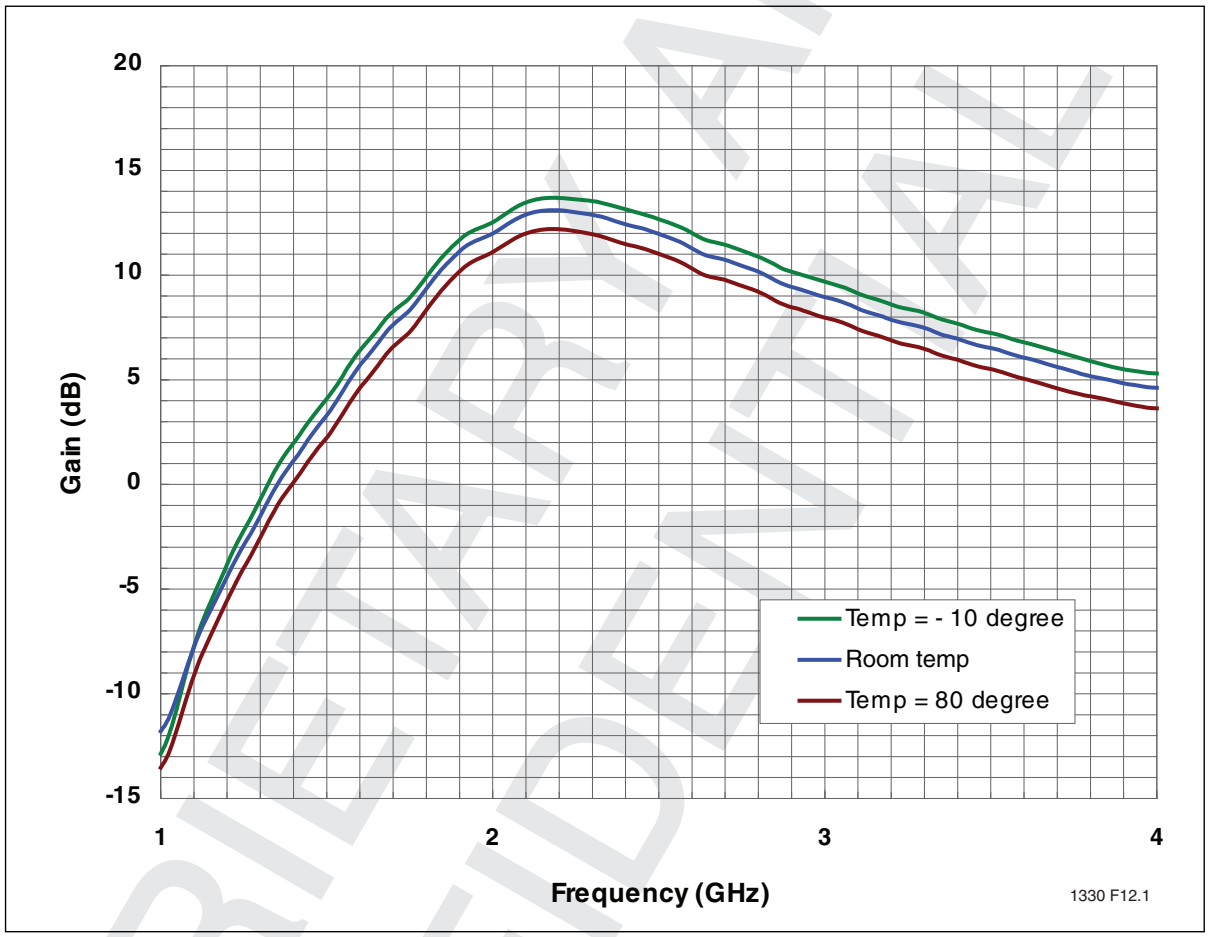

Figure 5: Frequency Response of Gain (S21) over three Temperatures

PROPRIETARY AND CONFIDENTIAL

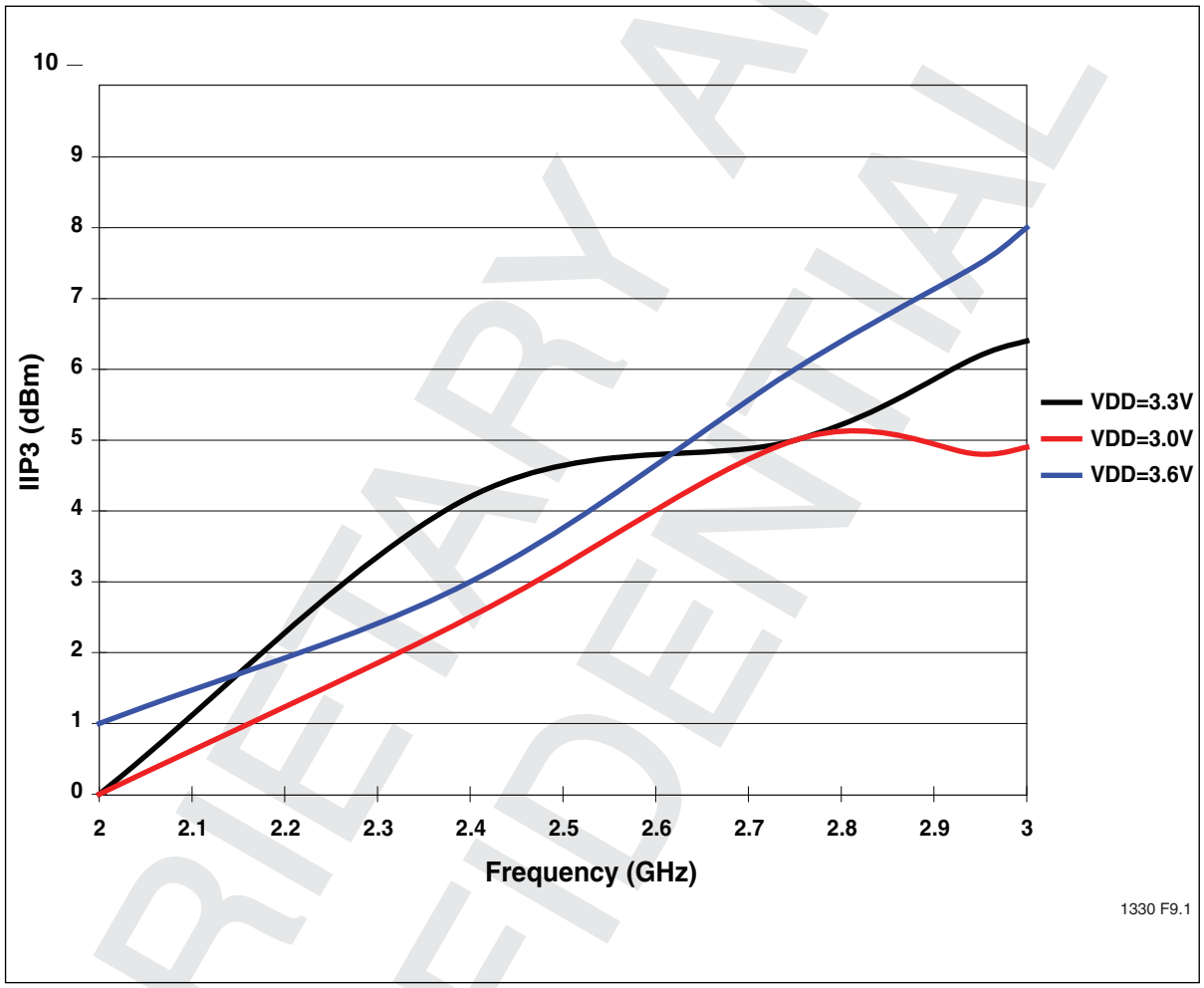

Figure 6: Input IP3 versus Frequency, RX Chain

PROPRIETARY AND CONFIDENTIAL

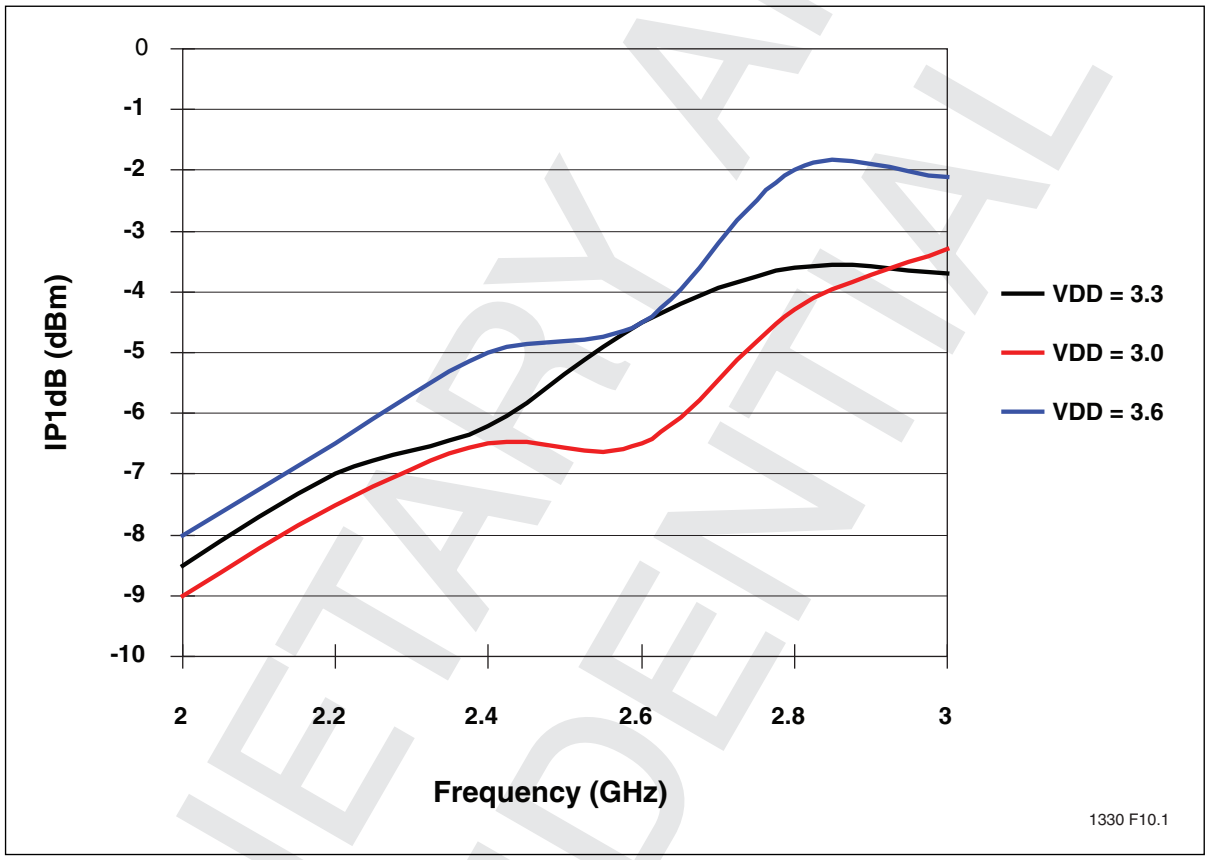

Figure 7: Input P1dB versus Frequency, RX Chain

PROPRIETARY AND CONFIDENTIAL

Test Conditions: V_{CC} = 3.3V, T_A = 25°C, unless otherwise specified

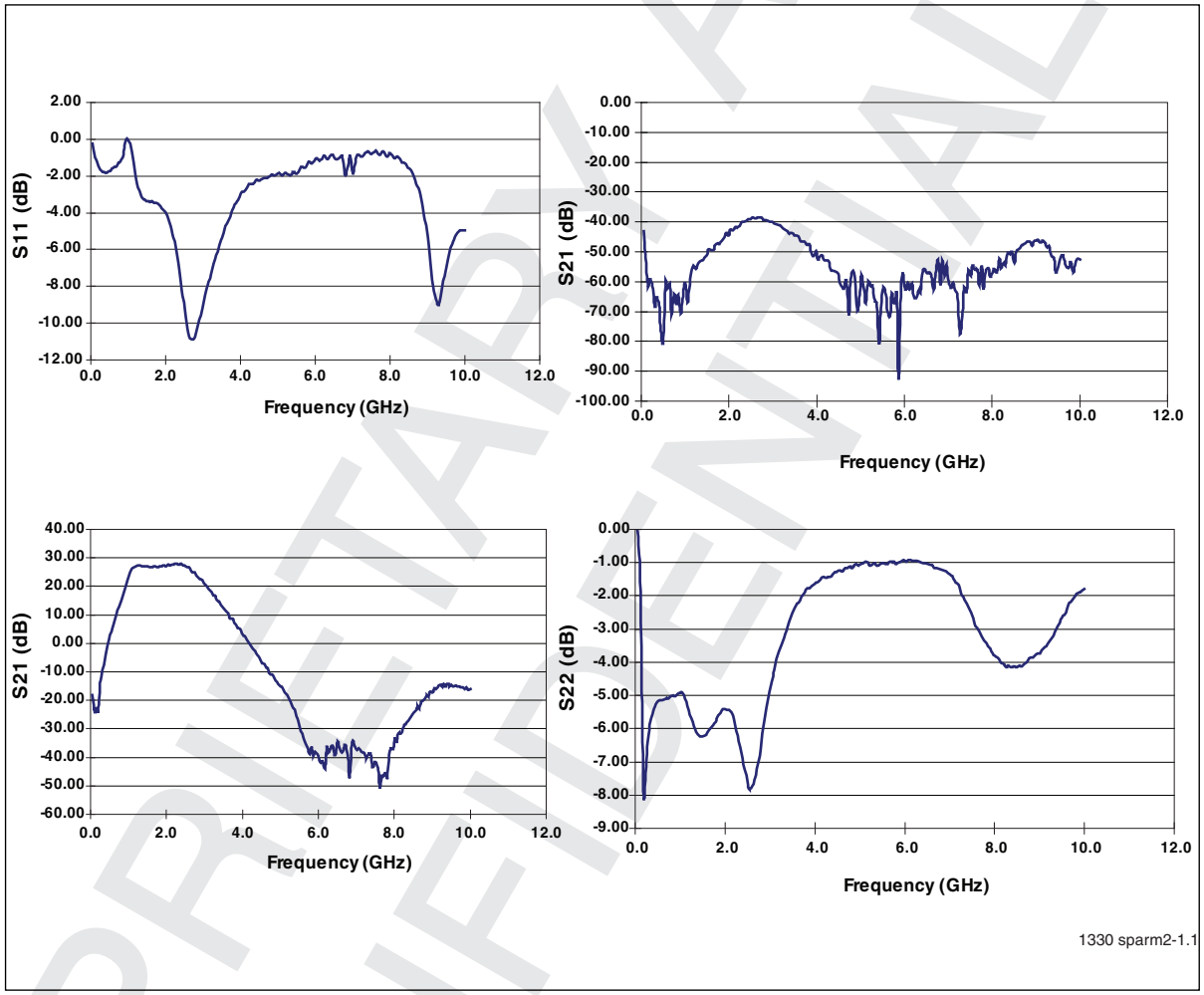

Figure 8: S-Parameters, TX Chain

PROPRIETARY AND CONFIDENTIAL

Typical Performance Characteristics

Test Conditions: f = 2.447 GHz, V_{CC} = 3.3V, V_{REF} = 2.85V at room temperature
I_{CQ} = 70 mA

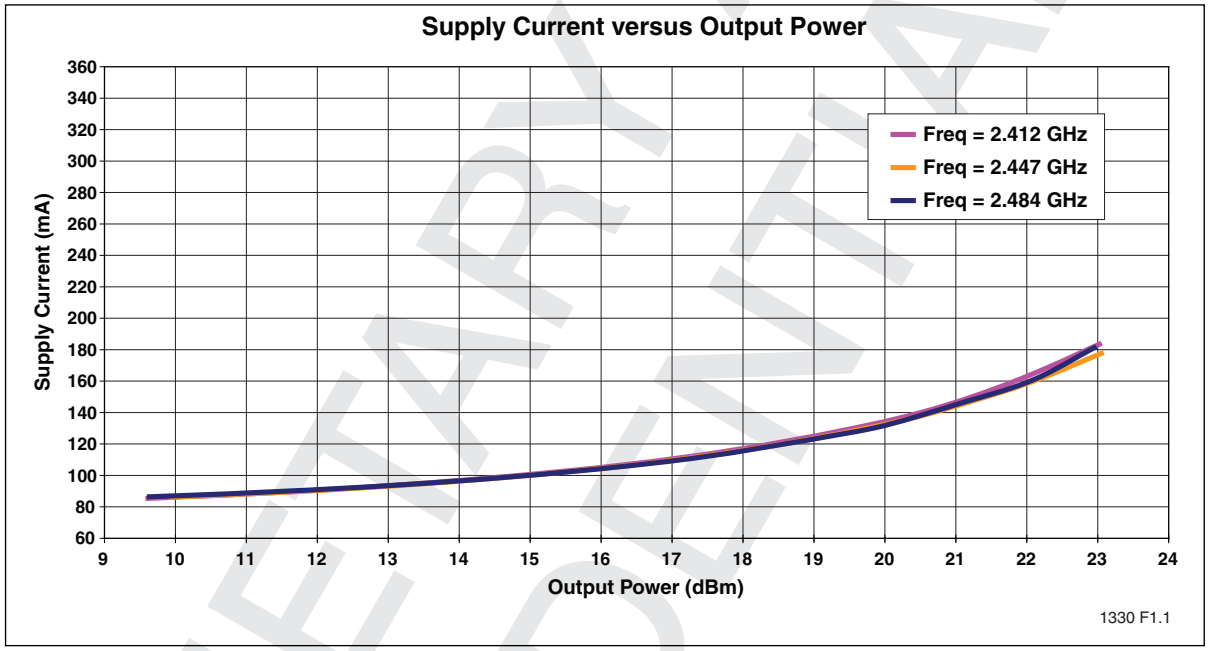

Figure 9: Supply Current versus Output Power

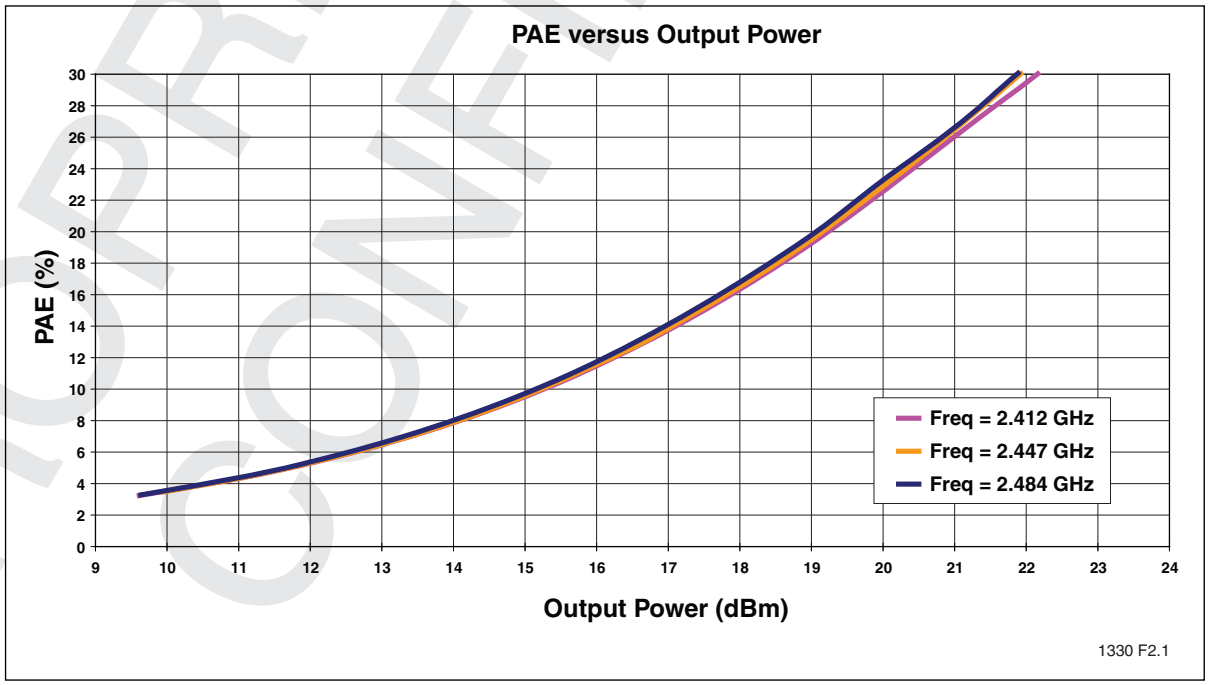

Figure 10: Power Added Efficiency (PAE) versus Output Power

PROPRIETARY AND CONFIDENTIAL

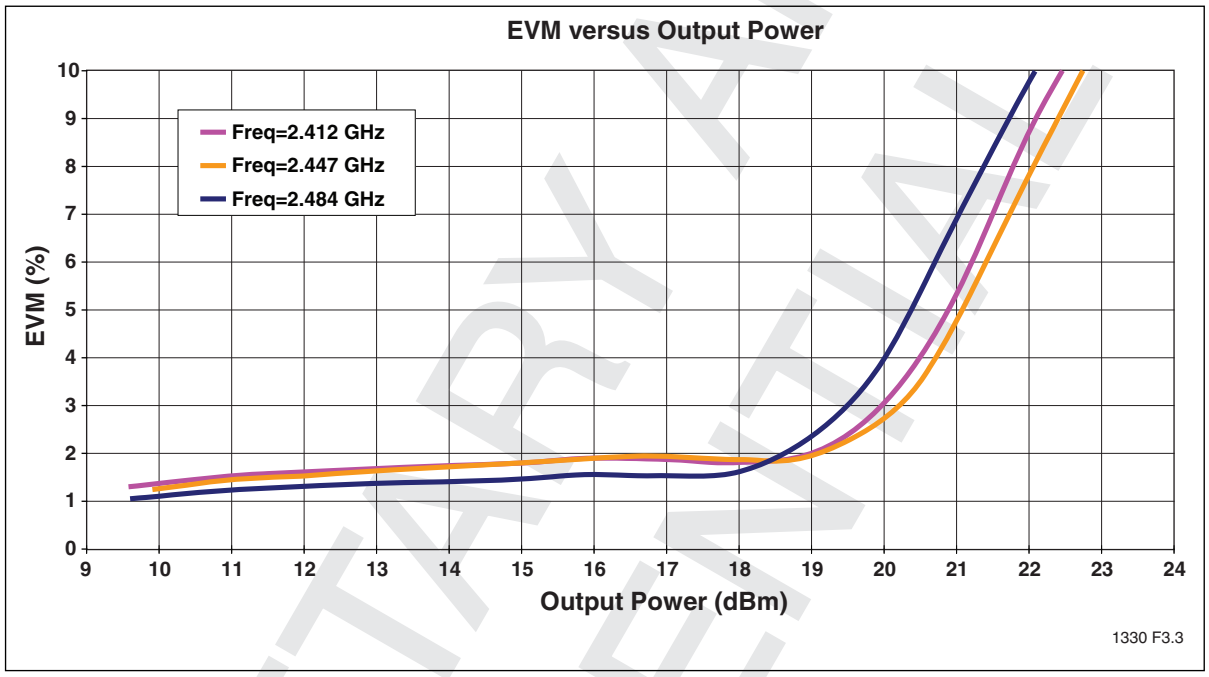

Figure 11: EVM versus Output Power, measured with Equalizer Channel Estimation set to "sequence plus data"

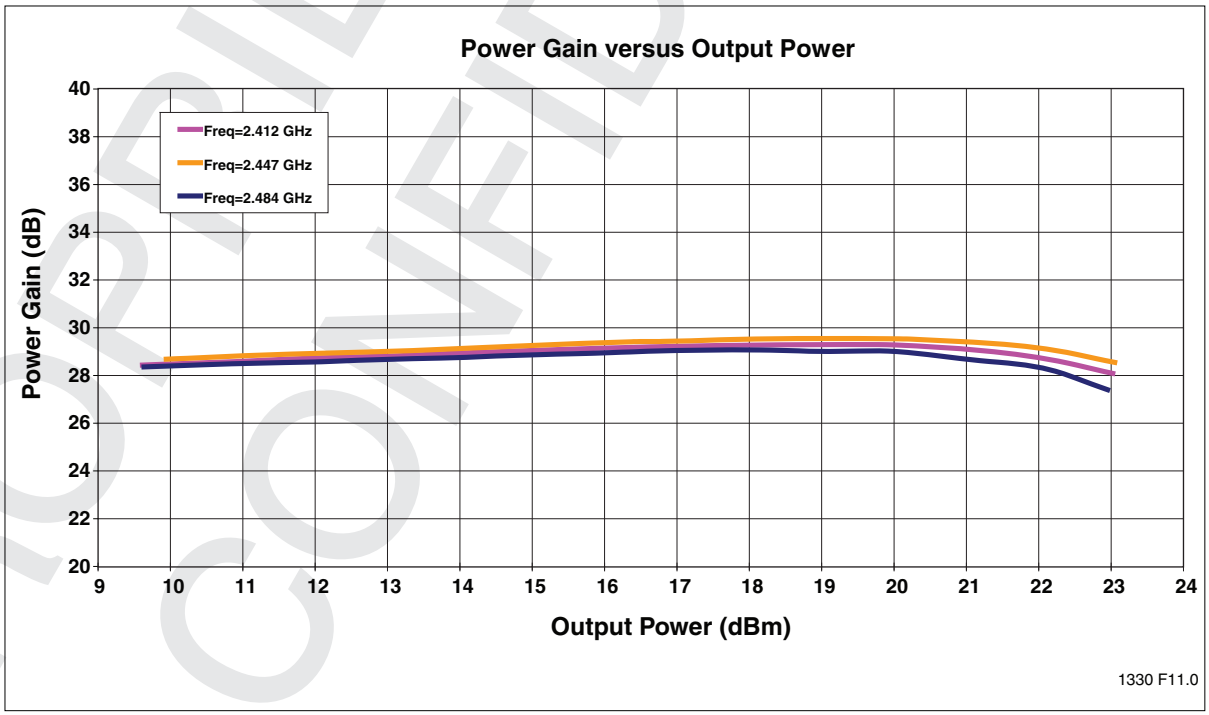

Figure 12: Power Gain versus Output Power

PROPRIETARY AND CONFIDENTIAL

Test Conditions: V_{CC} = 3.3V, T_A = 25°C, 54 Mbps 802.11g OFDM signal

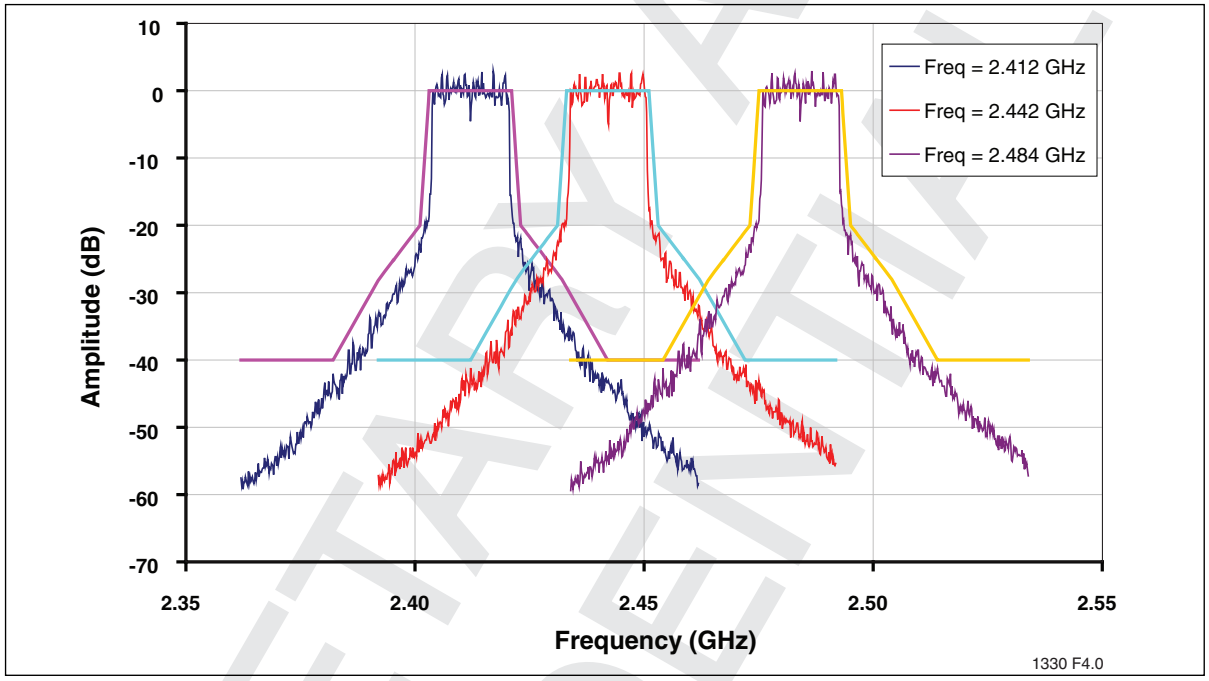

Figure 13:802.11g Spectrum Mask at 23 dBm

Test Conditions: V_{CC} = 3.3V, T_A = 25°C, 1 Mbps 802.11b signal

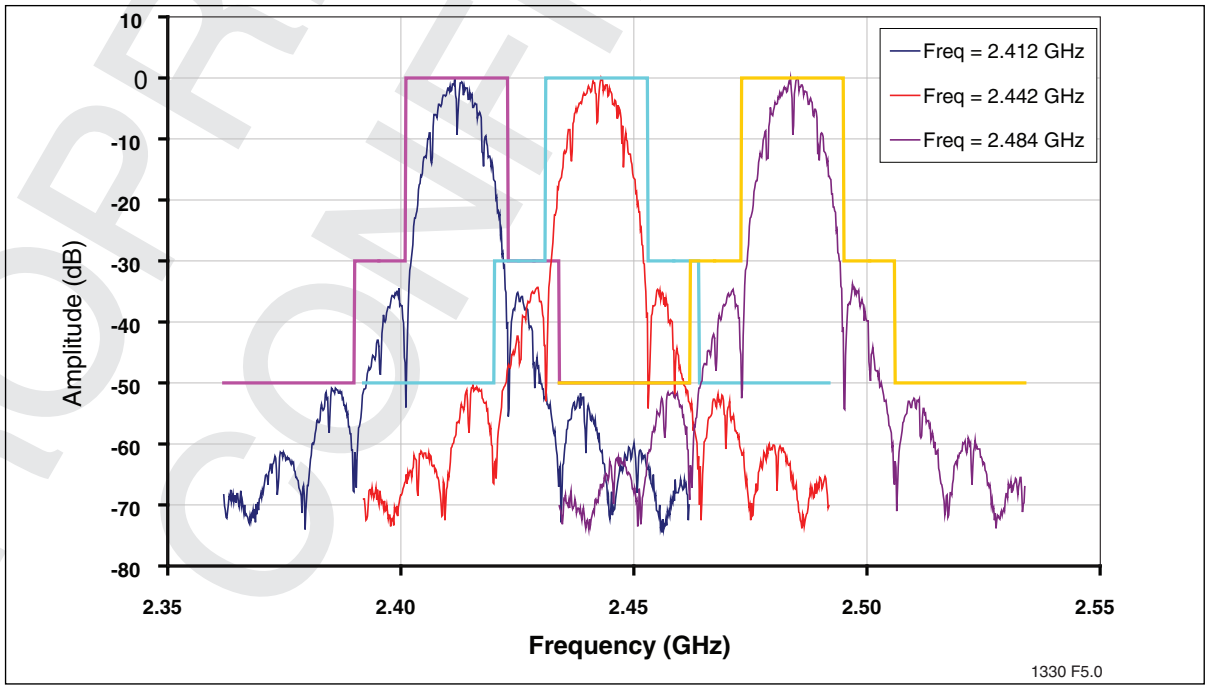

Figure 14:802.11b Spectrum Mask at 23 dBm

PROPRIETARY AND CONFIDENTIAL

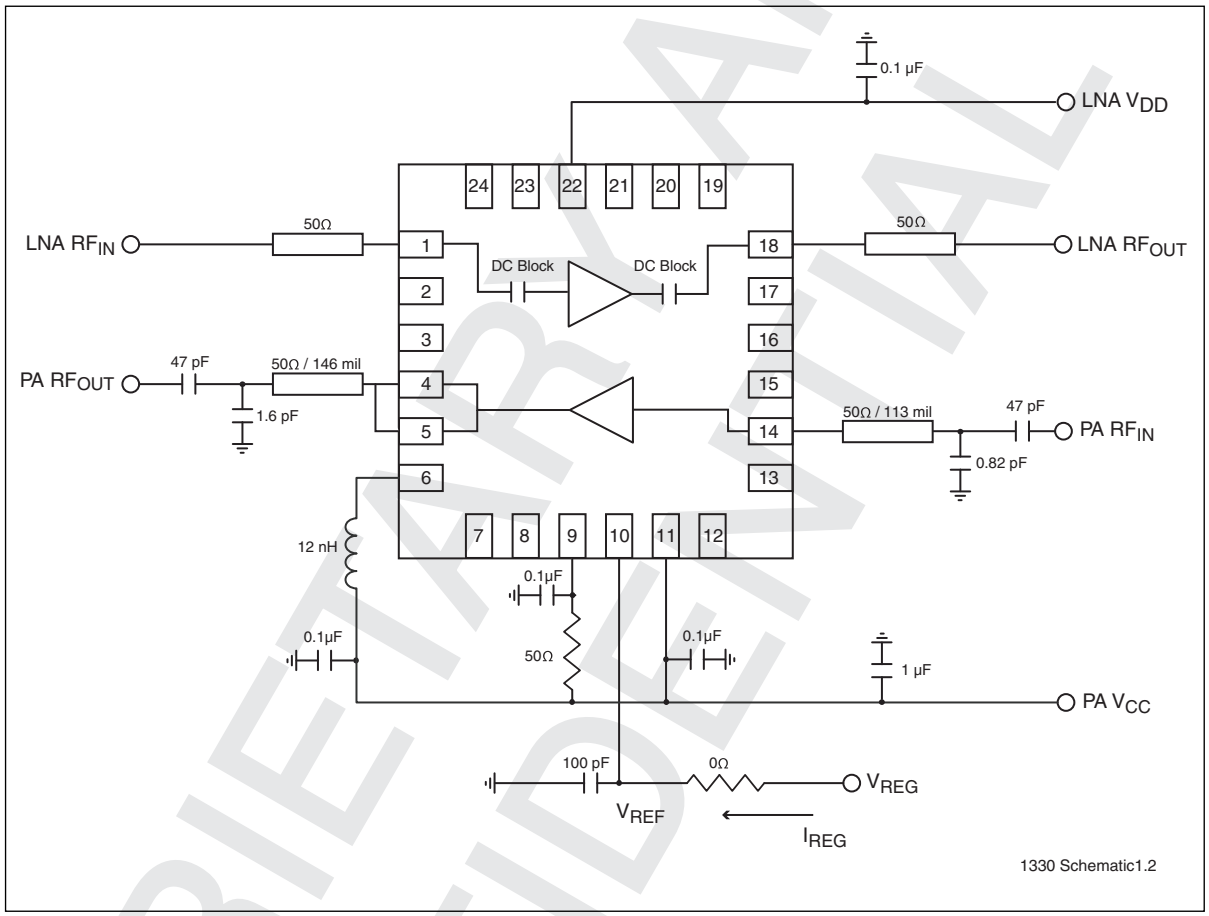

Figure 15: Typical Schematic

PROPRIETARY AND CONFIDENTIAL

Product Ordering Information

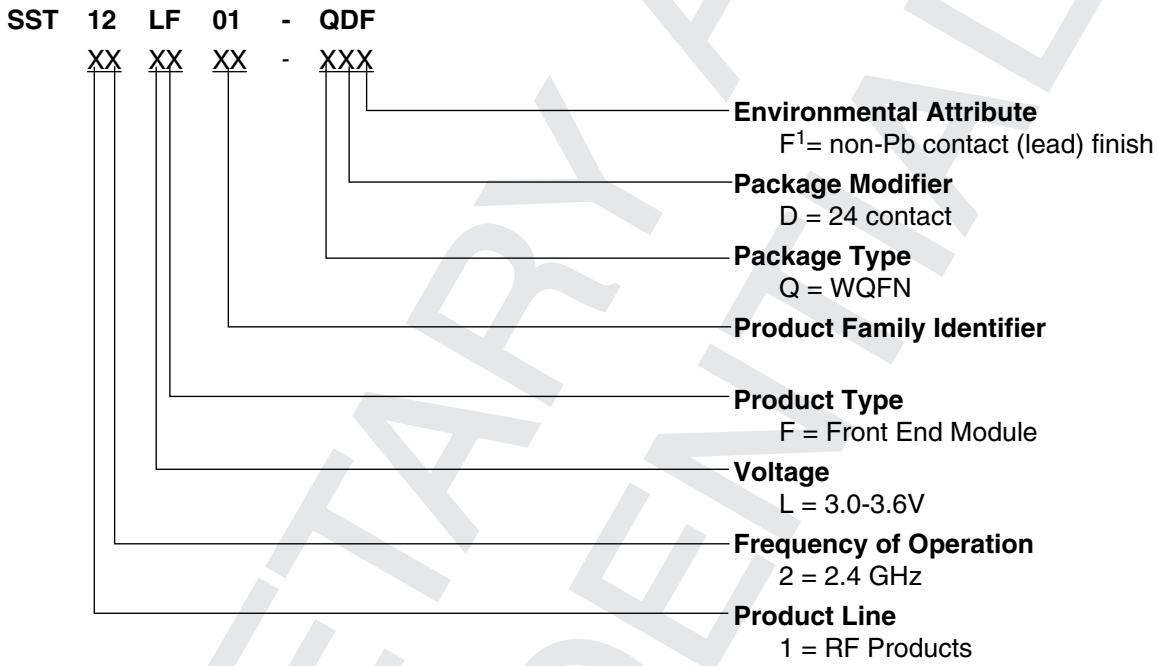

1. Environmental suffix “F” denotes non-Pb solder. SST non-Pb solder devices are “RoHS Compliant”.

Valid combinations for SST12LF01

SST12LF01-QDF

SST12LF01 Evaluation Kits

SST12LF01-QDF-K

Note: Valid combinations are those products in mass production or will be in mass production. Consult your SST sales representative to confirm availability of valid combinations and to determine availability of new combinations.

PROPRIETARY AND CONFIDENTIAL

Packaging Diagrams

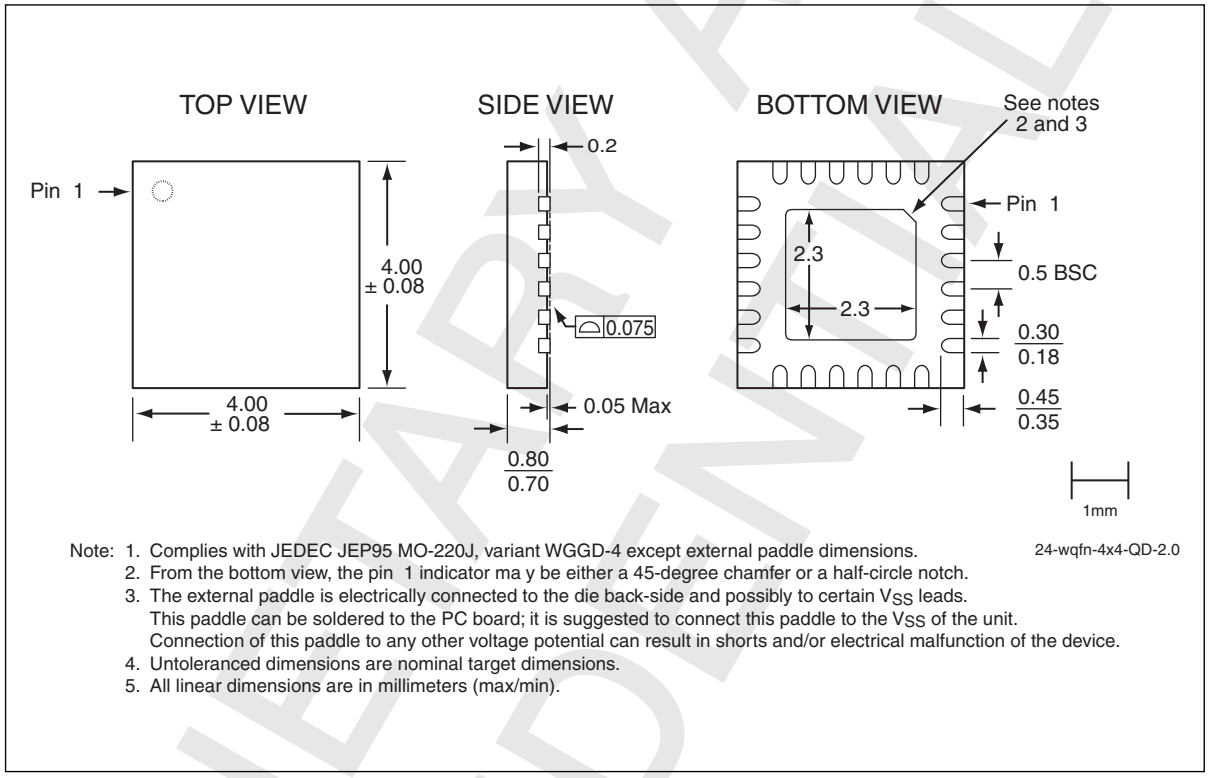

Note: 1. Complies with JEDEC JEP95 MO-220J, variant WGGD-4 except external paddle dimensions.
2. From the bottom view, the pin 1 indicator ma y be either a 45-degree chamfer or a half-circle notch.
3. The external paddle is electrically connected to the die back-side and possibly to certain V_{SS} leads. This paddle can be soldered to the PC board; it is suggested to connect this paddle to the V_{SS} of the unit. Connection of this paddle to any other voltage potential can result in shorts and/or electrical malfunction of the device.
4. Untoleranced dimensions are nominal target dimensions.
5. All linear dimensions are in millimeters (max/min).

24-wqfn-4x4-QD-2.0

Figure 16: 24-contact Very-very-thin Quad Flat No-lead (WQFN)
SST Package Code: QD

PROPRIETARY AND CONFIDENTIAL

Table 6: Revision History

Revision	Description	Date
00	• Initial release of data sheet	Sep 2006
01	• Updated pins 9 and 11 in Figure 2 on page 4 • Updated pin 6, 9, and 11 in Table 1 on page 5 • Updated Figure 11 on page 15 • Updated Figure 15 on page 17	Jan 2007
02	• Updated “Product Ordering Information” on page 18	Sep 2007
03	• Revised Product Description on page 1 • Changed signal gain value14 dB globally • Changed low-noise figure to 1.45 dB globally • Edited high temperature stability feature, page 1 • Change low idle current to 75 mA, page 1 • Edited Table 2, DC Electrical Characteristics; Table 3, AC Electrical Characteristics RX Chain; Table 4, AC Electrical Characteristics TX Chain • Replaced Figures 3 through 11 with up-to-date graphs on pages 7 through 13 • Added Figure 5 on page 8 • Added Figure 12 on page 15 • Edited Figure 15 on page 17	Jun 2008
04	• Revised RX chain gain value from 14 to 12 in “Features” and “Product Description” on page 2 and Table 4 on page 7. • Updated Figures 3 and 5.	Nov 2008
05	• Updated contact information	Feb 2009
06	• Updated document status to “Data Sheet” • Revised IIPE values in Features on page 1 and Table 4 on page 7 • Changed definition of “F” environmental attribute in “Product Ordering Information” on page 18	Nov 2010
A	• Removed products with an “E” environmental attribute from “Product Ordering Information” on page 18 • Revised Figure 1 on page 3 and the caption of • Applied new document format • Released document under letter revision system • Updated Spec number from S71330 to DS75040	Dec 2011

PROPRIETARY AND CONFIDENTIAL

PROPRIETARY AND CONFIDENTIAL

ISBN:978-1-61341-864-2

© 2011 Silicon Storage Technology, Inc–a Microchip Technology Company. All rights reserved.

SST, Silicon Storage Technology, the SST logo, SuperFlash, MTP, and FlashFlex are registered trademarks of Silicon Storage Technology, Inc. MPF, SQI, Serial Quad I/O, and Z-Scale are trademarks of Silicon Storage Technology, Inc. All other trademarks and registered trademarks mentioned herein are the property of their respective owners.

Specifications are subject to change without notice. Refer to www.microchip.com for the most recent documentation. For the most current package drawings, please see the Packaging Specification located at http://www.microchip.com/packaging.

Memory sizes denote raw storage capacity; actual usable capacity may be less.

SST makes no warranty for the use of its products other than those expressly contained in the Standard Terms and Conditions of Sale.

For sales office locations and information, please see www.microchip.com.

Silicon Storage Technology, Inc.
A Microchip Technology Company
www.microchip.com