SST11CP22

5.1-5.9 GHz 802.11ac WLAN Power Amplifier

Features

- 50Ω input and output match including DC blocks
- Integrated harmonic filter
- Operating voltage: V_{CC} = 5.0V
- Operating frequency: 5.1 to 5.9 GHz
- High linear output power, typical performance:
  - 802.11a OFDM Spectrum mask compliant up to 24 dBm
  - 802.11n HT40 OFDM Spectrum mask compliant up to 23 dBm
  - 3% EVM up to 20 dBm for 802.11a, 54 Mbps signal
  - 2.5% EVM up to 19 dBm for 802.11n, HT40
  - 1.8% EVM up to 18 dBm for 802.11ac, MCS9, 80 MHz BW (bandwidth) signal
- Gain: Typically 31 dB gain across 5.1–5.9 GHz
- Idle current: Typically ~320 mA I_{CQ}
- High-speed power-up/down
  - Turn on/off time (10%-90%) <100 ns
- Shut-down current (~2 µA)
- On-chip power detection
  - >20 dB linear dynamic range
  - VSWR insensitive
- All devices are RoHS compliant

Applications

- WLAN (IEEE 802.11a/n/ac)
- HyperLAN2
- Multimedia

Product Description

SST11CP22 is a 50Ω, RF-matched Power Amplifier Module (PAM) with a FCC-compliant, harmonic filter that is based on the highly-reliable InGaP/GaAs HBT technology.

Operating over the 5.1–5.9 GHz frequency band, SST11CP22 meets 802.11a spectrum mask requirements up to 24 dBm and 802.11n HT40 spectrum mask at 23 dBm. With 802.11a modulation, this PA typically provides up to 20.5 dBm with 3% EVM, and provides 18 dBM with less than 1.8% dynamic EVM using 802.11ac modulation, MCS9, 80 MHz bandwidth.

This power amplifier module also features easy board-level operation, with a simple application circuit requiring only four external components. With its high-speed power-up/-down control, SST11CP22 is controllable directly from the baseband chip.

SST11CP22 also features a wide dynamic-range, linear power detector that is temperature-stable and VSWR-insensitive.

SST11CP22 is offered in 20-contact QFN package. See Figure 2-1 for pin assignments and Table 2-1 for pin descriptions.

© 2015 Microchip Technology Inc.

TO OUR VALUED CUSTOMERS

It is our intention to provide our valued customers with the best documentation possible to ensure successful use of your Microchip products. To this end, we will continue to improve our publications to better suit your needs. Our publications will be refined and enhanced as new volumes and updates are introduced.

If you have any questions or comments regarding this publication, please contact the Marketing Communications Department via E-mail at **docerrors@microchip.com**. We welcome your feedback.

Most Current Data Sheet

To obtain the most up-to-date version of this data sheet, please register at our Worldwide Web site at:

http://www.microchip.com

You can determine the version of a data sheet by examining its literature number found on the bottom outside corner of any page. The last character of the literature number is the version number, (e.g., DS30000000A is version A of document DS30000000).

Errata

An errata sheet, describing minor operational differences from the data sheet and recommended workarounds, may exist for current devices. As device/documentation issues become known to us, we will publish an errata sheet. The errata will specify the revision of silicon and revision of document to which it applies.

To determine if an errata sheet exists for a particular device, please check with one of the following:

- Microchip's Worldwide Web site; **http://www.microchip.com**
- Your local Microchip sales office (see last page)

When contacting a sales office, please specify which device, revision of silicon and data sheet (include literature number) you are using.

Customer Notification System

Register on our web site at **www.microchip.com** to receive the most current information on all of our products.

© 2015 Microchip Technology Inc.

1.0 FUNCTIONAL BLOCKS

FIGURE 1-1: FUNCTIONAL BLOCK DIAGRAM

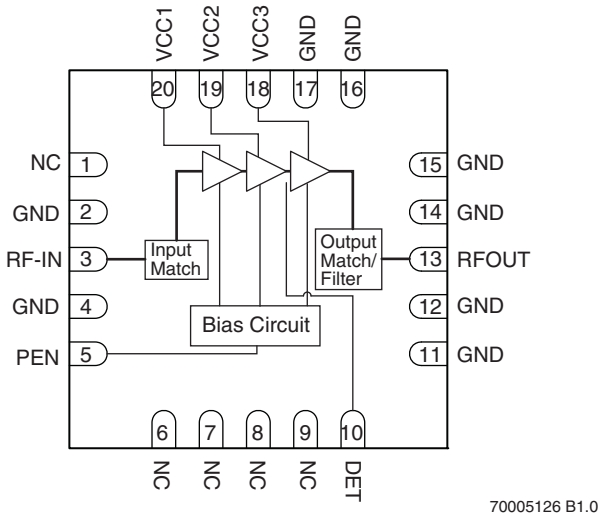

2.0 PIN ASSIGNMENTS

FIGURE 2-1: PIN ASSIGNMENTS FOR 20-CONTACT UQFN

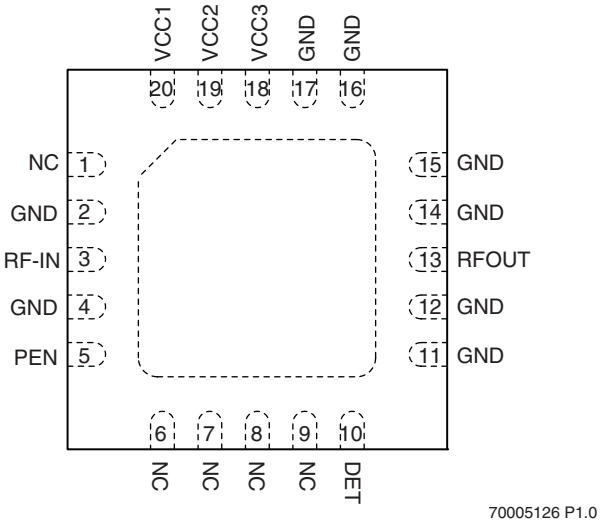

TABLE 2-1: PIN DESCRIPTION

Symbol	Pin No.	Pin Name	Function
GND	0	Center ground contact	The center pad should be connected to RF ground with several low inductance, low resistance vias.
NC	1	No Connection	Unconnected, no internal connection
GND	2	Ground	
RFIN	3	RF input	RF input port
GND	4	Ground	
PEN	5	PA enable	PA enable control input
NC	6	No Connection	Unconnected, no internal connection
NC	7	No Connection	Unconnected, no internal connection
NC	8	No Connection	Unconnected, no internal connection
NC	9	No Connection	Unconnected, no internal connection
DET	10	TX detector output	TX detector output
GND	11	Ground	
GND	12	Ground	
RF OUT	13	RF Out	RF Output port
GND	14	Ground	
GND	15	Ground	
GND	16	Ground	
GND	17	Ground	
VCC3	18	PA supply	PA Supply
VCC2	19	PA supply	PA Supply
VCC1	20	PA supply	PA Supply

© 2015 Microchip Technology Inc.

3.0 ELECTRICAL SPECIFICATIONS

The AC and DC specifications for the power amplifier interface signals. Refer to Table 3-2 for the DC voltage and current specifications. Refer to Figures 4-1 through 4-7 for the RF performance.

Absolute Maximum Stress Ratings (Applied conditions greater than those listed under “Absolute Maximum Stress Ratings” may cause permanent damage to the device. This is a stress rating only and functional operation of the device at these conditions or conditions greater than those defined in the operational sections of this data sheet is not implied. Exposure to absolute maximum stress rating conditions may affect device reliability.)

Supply Voltage at pins 18, 19, and 20 (V_{CC}) . . . . . -0.3V to +6.5V
Supply voltage to pins 5, 6, and 7 (V_{PEN}) . . . . . -0.3V to +3.6V
DC supply current (I_{CC}) . . . . . 600 mA
Operating Temperature (T_A) . . . . . -20ºC to +85ºC
Storage Temperature (T_{STG}) . . . . . -40ºC to +120ºC
Maximum Junction Temperature (T_J) . . . . . +150ºC
Maximum Output Power . . . . . 26 dBm
Surface Mount Solder Reflow Temperature . . . . . 260°C for 10 seconds

TABLE 3-1: OPERATING RANGE

Range	Ambient Temp	V_{CC}
Industrial	-10°C to +85°C	5.0V-6.0V

TABLE 3-2: DC ELECTRICAL CHARACTERISTICS

Symbol	Parameter	Min.	Typ	Max.	Unit
V_{CC}	Supply Voltage		5.0	6.0	V
I_{CC}	Supply Current @ P_{OUT} = 20 dBm		370		mA
I_{CQ}	V_{CC} Quiescent Current		320		mA
I_{OFF}	Shutdown Current		2		µA
V_{PEN}	Recommended Enable Voltage		2.85		V
I_{PEN}	Total Enable Current		8		mA
V_{DET}	RF Power Detector Voltage Output Range, 0 to 23 dBm	0.15		1.0	V
	Voltage at 20 dBm		0.75		V

© 2015 Microchip Technology Inc.

TABLE 3-3: AC ELECTRICAL CHARACTERISTICS FOR CONFIGURATION V_{CC} = 5.0V, V_{PEN}=2.85V, 25 °C UNLESS OTHERWISE SPECIFIED

Symbol	Parameter	Min.	Typ	Max.	Unit
F_{L-U}	Frequency range	5.1		5.9	GHz
Linear Power	Output power at 3% EVM at 54 Mbps OFDM signal, 802.11a		20.5		dBm
	Output power at 2.5% dynamic EVM 802.11n HT40		19		dBm
	Output power 1.8% dynamic EVM MCS9 80 MHz BW		18		dBm
	$ACPR_A$ output power level with 802.11a mask compliance @ 6Mbps OFDM		24		dBm
	$ACPR_{N40}$ output power level with 802.11n HT40 mask compliance		23		dBm
G	Power gain from 5.18-5.9 GHz		31		dB
RL	RF input return loss		10		dB
$2f_0$	Second harmonic power density at 24 dBm		-45		dBm/MHz
$3f_0$	Third harmonic power density at 24 dBm		-50		dBm/MHz

© 2015 Microchip Technology Inc.

4.0 TYPICAL PERFORMANCE CHARACTERISTICS

Test Conditions: V_{CC} = 5.0V, T_A = 25°C, V_{PEN} = 2.85V, 802.11a 54 Mbps OFDM Modulation, 50% Duty Cycle, 25°C Unless otherwise specified

FIGURE 4-1: S-PARAMETERS

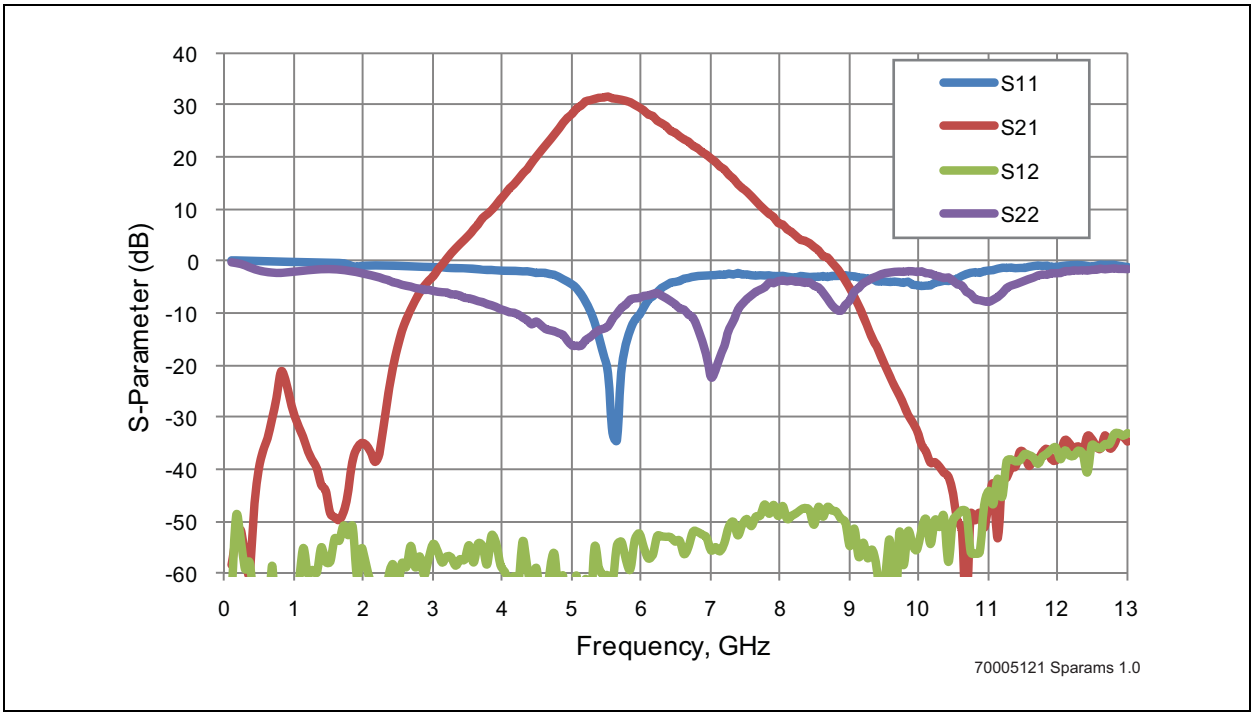

FIGURE 4-2: DYNAMIC EVM VERSUS OUTPUT POWER, 802.11a 54 Mbps, 50% DUTY CYCLE, V_{PEN}=2.85V

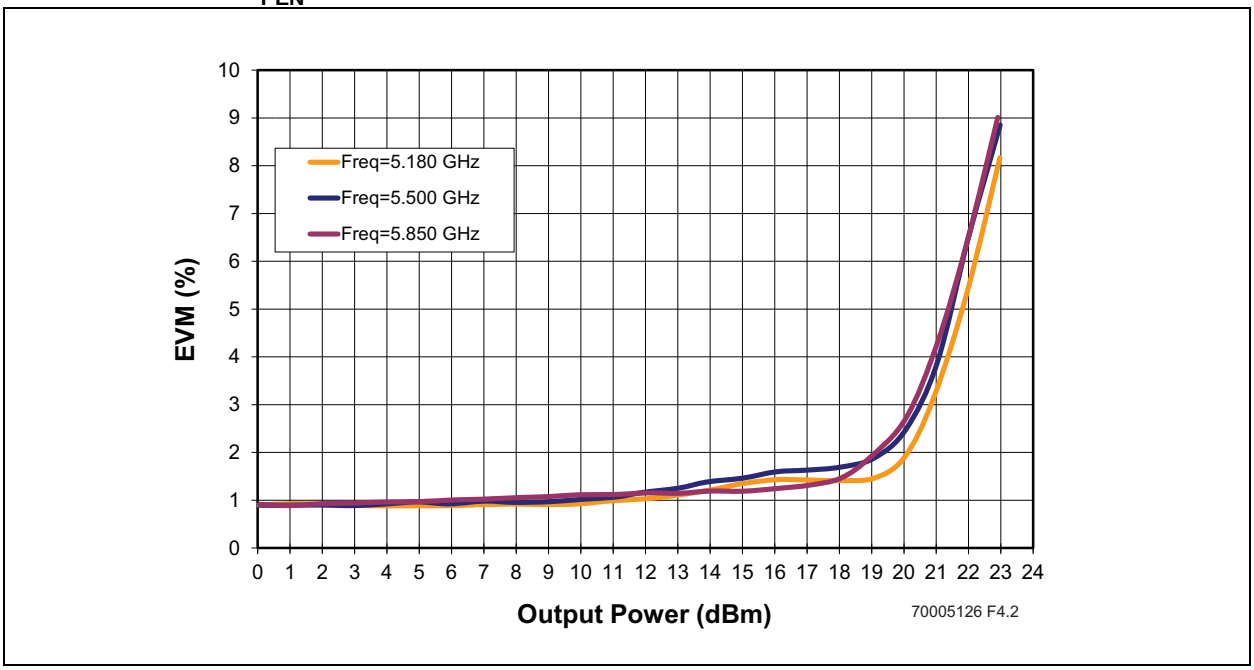

FIGURE 4-3: DYNAMIC EVM VERSUS OUTPUT POWER, 802.11n MCS7-HT40, 40 MHz, 50% DUTY CYCLE, V_{PEN}=2.85V

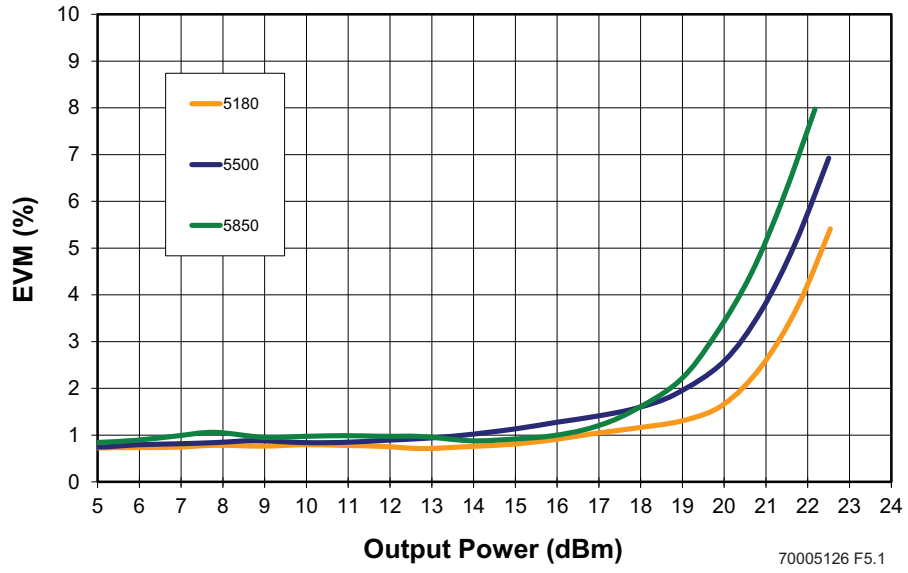

FIGURE 4-4: DYNAMIC EVM VERSUS OUTPUT POWER, 802.11ac MCS9, 80 MHz, 60 µS PULSE, 50% DUTY CYCLE, V_{PEN}=2.85V

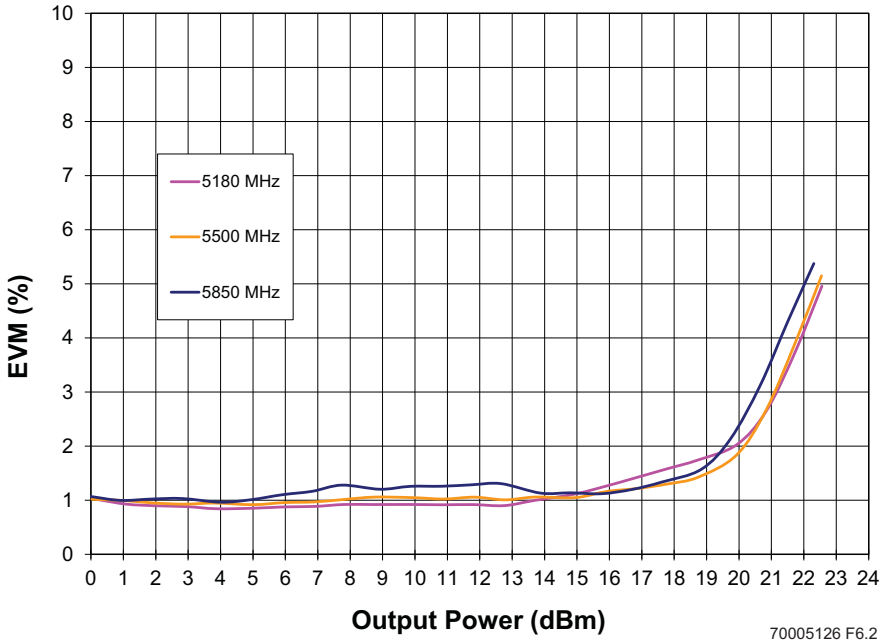

© 2015 Microchip Technology Inc.

FIGURE 4-5: INSTANTANEOUS POWER SUPPLY CURRENT VERSUS OUTPUT POWER, V_{CC}=5.0V, 802.11ac MCS9, 80 MHz, 60 µs PULSE, 50% DUTY CYCLE V_{PEN}=2.85V

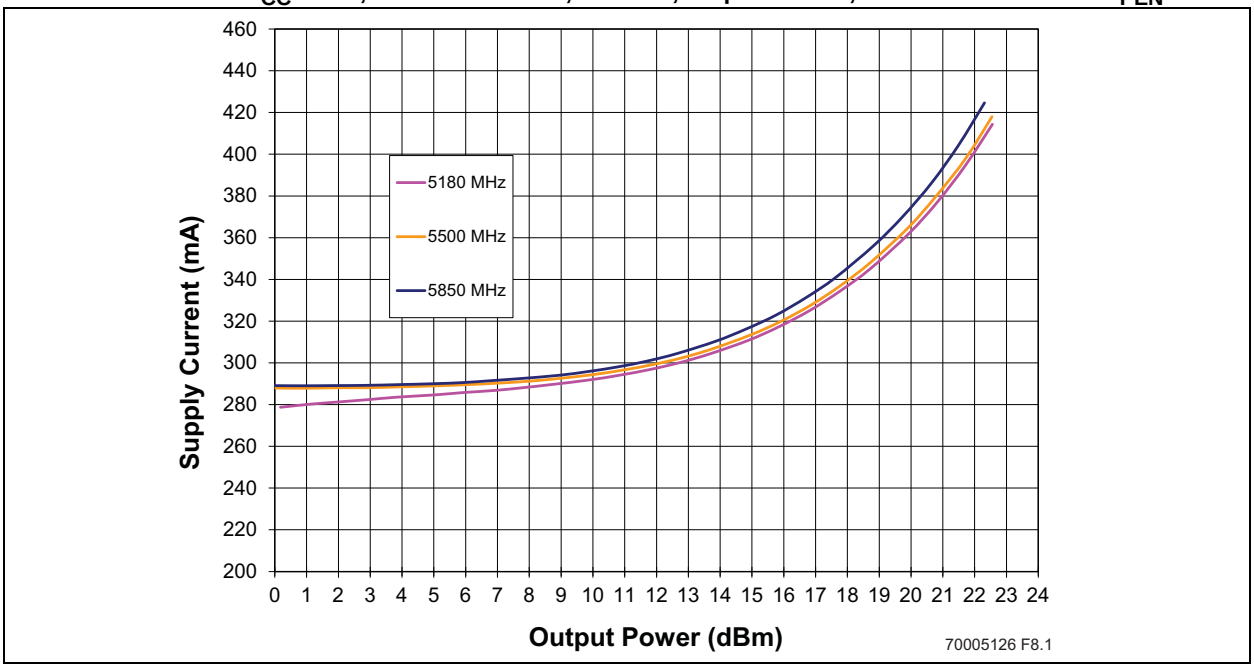

FIGURE 4-6: POWER GAIN VERSUS OUTPUT POWER

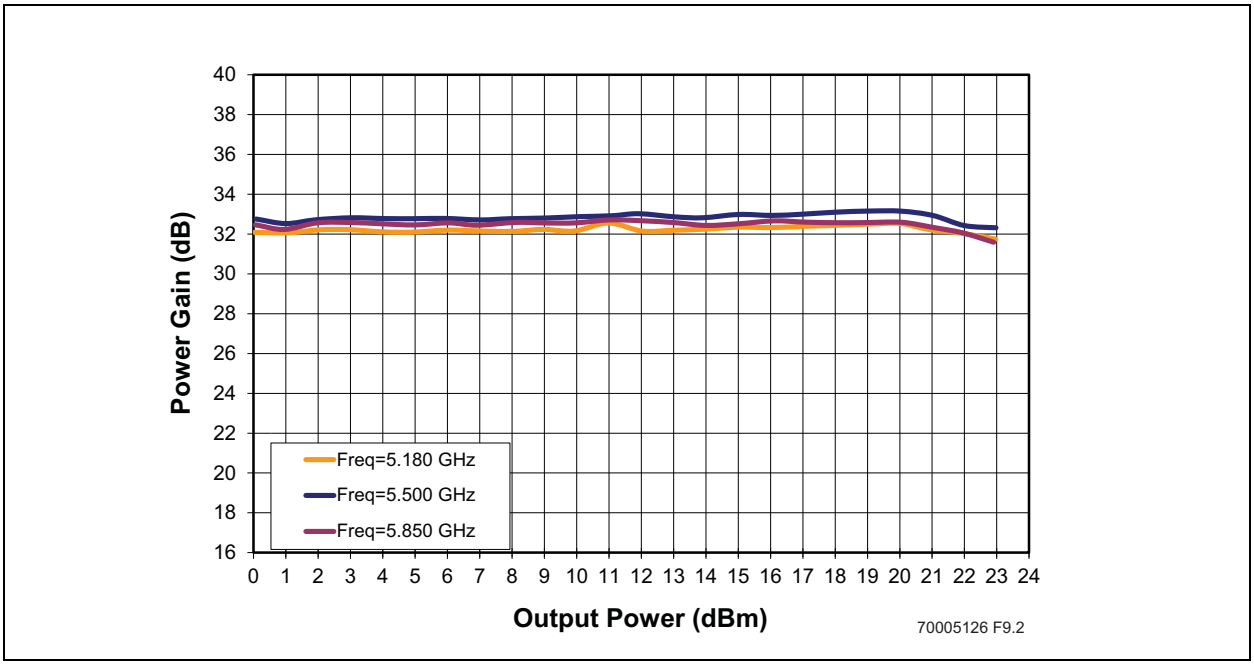

FIGURE 4-7: DETECTOR VOLTAGE VERSUS OUTPUT POWER, V_{PEN}=2.85V

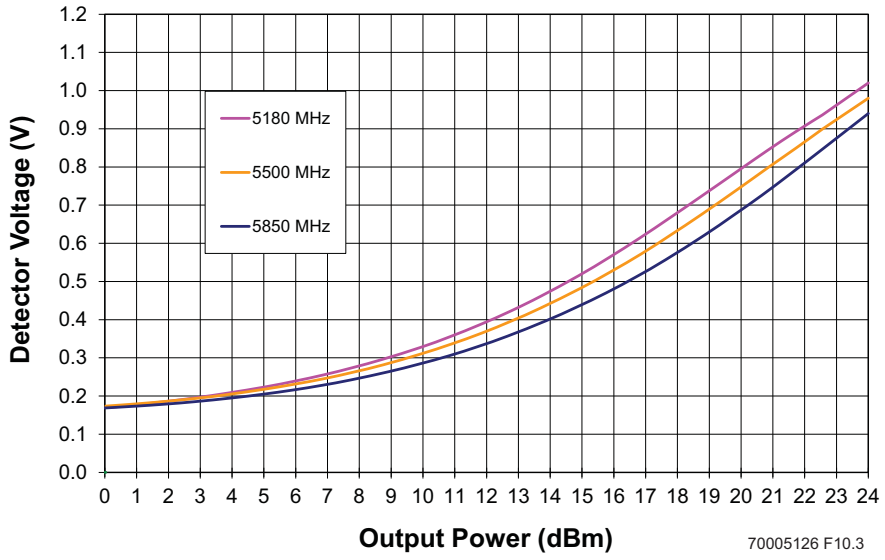

FIGURE 4-8: TYPICAL SCHEMATIC FOR 802.11a/n/ac APPLICATIONS, V_{CC}=5.0V, V_{PEN}=2.85V

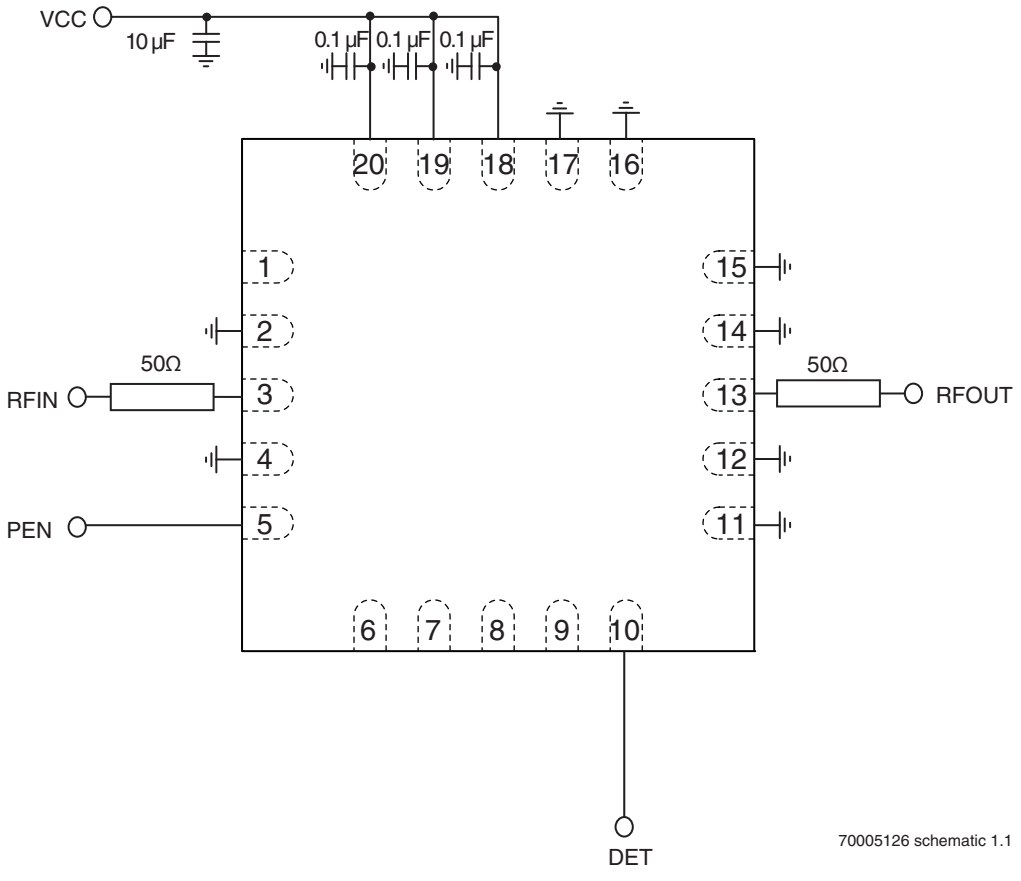

© 2015 Microchip Technology Inc.

5.0 PACKAGE INFORMATION

20-Lead Ultra Thin Quad Flat Pack, No Lead (GN) - 4x4x0.55 mm Body (UQFN)

Note: For the most current package drawings, please see the Microchip Packaging Specification located at http://www.microchip.com/packaging

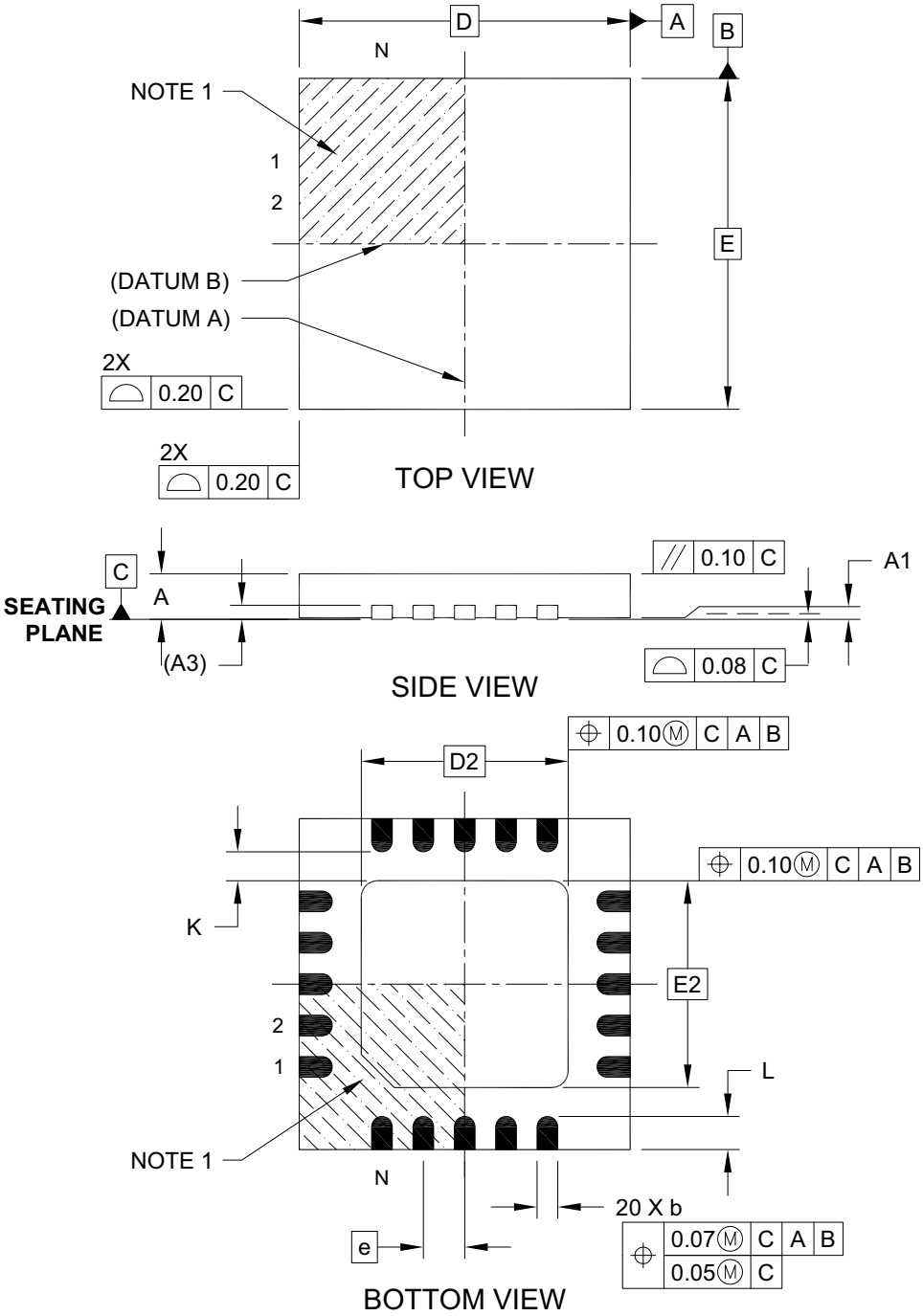

Microchip Technology Drawing C04-252A Sheet 1 of 2

20-Lead Ultra Thin Quad Flat Pack, No Lead (GN) - 4x4x0.55 mm Body (UQFN)

Note: For the most current package drawings, please see the Microchip Packaging Specification located at http://www.microchip.com/packaging

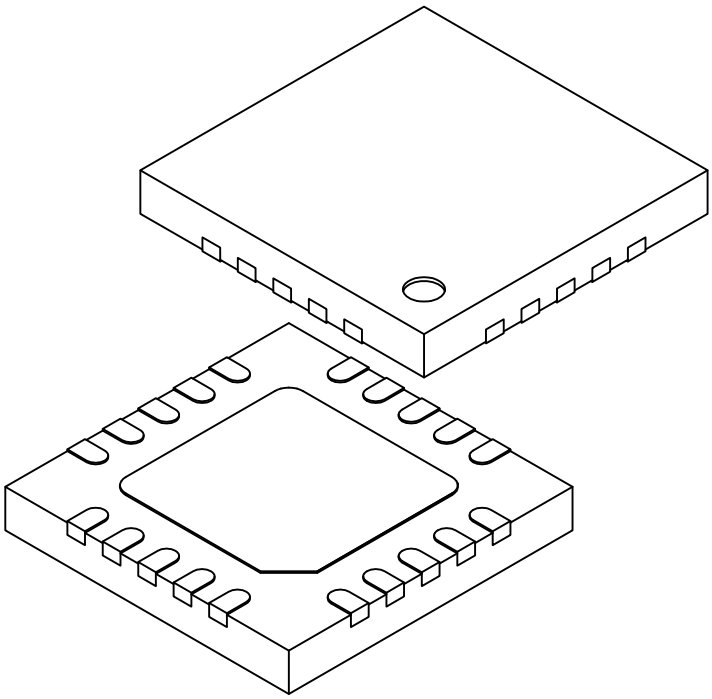

Units		MILLIMETERS		
Dimension Limits		MIN	NOM	MAX
Number of Pins	N		20	
Pitch	e		0.50 BSC	
Overall Height	A	0.50	0.55	0.60
Standoff	A1	0.00	0.02	0.05
Terminal Thickness	(A3)		0.15 REF	
Overall Width	E		4.00 BSC	
Exposed Pad Width	E2	2.45	2.50	2.55
Overall Length	D		4.00 BSC	
Exposed Pad Length	D2	2.45	2.50	2.55
Terminal Width	b	0.20	0.25	0.30
Terminal Length	L	0.35	0.40	0.45
Terminal-to-Exposed-Pad	K	0.20	-	-

Notes:

1. Pin 1 visual index feature may vary, but must be located within the hatched area.
2. Package is saw singulated
3. Dimensioning and tolerancing per ASME Y14.5M

   BSC: Basic Dimension. Theoretically exact value shown without tolerances.

   REF: Reference Dimension, usually without tolerance, for information purposes only.

Microchip Technology Drawing C04-252A Sheet 2 of 2

© 2015 Microchip Technology Inc.

TABLE 5-1: REVISION HISTORY

Revision	Description	Date
A	• Initial release of data sheet	Jul 2013
B	• Revised Product Description on page 1 • Updated Figures 4-2 to 4-8 • Updated Tables 3-2 and 3-3	Mar 2015

THE MICROCHIP WEB SITE

Microchip provides online support via our WWW site at www.microchip.com. This web site is used as a means to make files and information easily available to customers. Accessible by using your favorite Internet browser, the web site contains the following information:

- **Product Support** – Data sheets and errata, application notes and sample programs, design resources, user's guides and hardware support documents, latest software releases and archived software
- **General Technical Support** – Frequently Asked Questions (FAQs), technical support requests, online discussion groups, Microchip consultant program member listing
- **Business of Microchip** – Product selector and ordering guides, latest Microchip press releases, listing of seminars and events, listings of Microchip sales offices, distributors and factory representatives

CUSTOMER CHANGE NOTIFICATION SERVICE

Microchip's customer notification service helps keep customers current on Microchip products. Subscribers will receive e-mail notification whenever there are changes, updates, revisions or errata related to a specified product family or development tool of interest.

To register, access the Microchip web site at www.microchip.com. Under "Support", click on "Customer Change Notification" and follow the registration instructions.

CUSTOMER SUPPORT

Users of Microchip products can receive assistance through several channels:

- Distributor or Representative
- Local Sales Office
- Field Application Engineer (FAE)
- Technical Support

Customers should contact their distributor, representative or field application engineer (FAE) for support. Local sales offices are also available to help customers. A listing of sales offices and locations is included in the back of this document.

Technical support is available through the web site at: http://microchip.com/support

© 2015 Microchip Technology Inc.

6.0 PRODUCT IDENTIFICATION SYSTEM

To order or obtain information, e.g., on pricing or delivery, refer to the factory or the listed sales office.

PART NO. XXX Device Package	Valid Combinations:
	SST11CP22-GN SST11CP22-GN-K

Device:	SST11CP22	= 51.-5.9 GHz Power Amplifier
Package:	GN	= UQFN (4mm x 4mm), 0.6 max thickness 20-contact
Evaluation Kit Flag	K	= Evaluation Kit

Note the following details of the code protection feature on Microchip devices:

- Microchip products meet the specification contained in their particular Microchip Data Sheet.
- Microchip believes that its family of products is one of the most secure families of its kind on the market today, when used in the intended manner and under normal conditions.
- There are dishonest and possibly illegal methods used to breach the code protection feature. All of these methods, to our knowledge, require using the Microchip products in a manner outside the operating specifications contained in Microchip's Data Sheets. Most likely, the person doing so is engaged in theft of intellectual property.
- Microchip is willing to work with the customer who is concerned about the integrity of their code.
- Neither Microchip nor any other semiconductor manufacturer can guarantee the security of their code. Code protection does not mean that we are guaranteeing the product as "unbreakable."

Code protection is constantly evolving. We at Microchip are committed to continuously improving the code protection features of our products. Attempts to break Microchip's code protection feature may be a violation of the Digital Millennium Copyright Act. If such acts allow unauthorized access to your software or other copyrighted work, you may have a right to sue for relief under that Act.

Information contained in this publication regarding device applications and the like is provided only for your convenience and may be superseded by updates. It is your responsibility to ensure that your application meets with your specifications. MICROCHIP MAKES NO REPRESENTATIONS OR WARRANTIES OF ANY KIND WHETHER EXPRESS OR IMPLIED, WRITTEN OR ORAL, STATUTORY OR OTHERWISE, RELATED TO THE INFORMATION, INCLUDING BUT NOT LIMITED TO ITS CONDITION, QUALITY, PERFORMANCE, MERCHANTABILITY OR FITNESS FOR PURPOSE**.** Microchip disclaims all liability arising from this information and its use. Use of Microchip devices in life support and/or safety applications is entirely at the buyer's risk, and the buyer agrees to defend, indemnify and hold harmless Microchip from any and all damages, claims, suits, or expenses resulting from such use. No licenses are conveyed, implicitly or otherwise, under any Microchip intellectual property rights.

Trademarks

The Microchip name and logo, the Microchip logo, dsPIC, FlashFlex, KEELOQ, KEELOQ logo, MPLAB, PIC, PICmicro, PICSTART, PIC32 logo, rfPIC, SST, SST Logo, SuperFlash and UNI/O are registered trademarks of Microchip Technology Incorporated in the U.S.A. and other countries.

FilterLab, Hampshire, HI-TECH C, Linear Active Thermistor, MTP, SEEVAL and The Embedded Control Solutions Company are registered trademarks of Microchip Technology Incorporated in the U.S.A.

Silicon Storage Technology is a registered trademark of Microchip Technology Inc. in other countries.

Analog-for-the-Digital Age, Application Maestro, BodyCom, chipKIT, chipKIT logo, CodeGuard, dsPICDEM, dsPICDEM.net, dsPICworks, dsSPEAK, ECAN, ECONOMONITOR, FanSense, HI-TIDE, In-Circuit Serial Programming, ICSP, Mindi, MiWi, MPASM, MPF, MPLAB Certified logo, MPLIB, MPLINK, mTouch, Omniscient Code Generation, PICC, PICC-18, PICDEM, PICDEM.net, PICkit, PICtail, REAL ICE, rfLAB, Select Mode, SQI, Serial Quad I/O, Total Endurance, TSHARC, UniWinDriver, WiperLock, ZENA and Z-Scale are trademarks of Microchip Technology Incorporated in the U.S.A. and other countries.

SQTP is a service mark of Microchip Technology Incorporated in the U.S.A.

GestIC and ULPP are registered trademarks of Microchip Technology Germany II GmbH & Co. & KG, a subsidiary of Microchip Technology Inc., in other countries.

All other trademarks mentioned herein are property of their respective companies.

© 2015, Microchip Technology Incorporated, Printed in the U.S.A., All Rights Reserved.

Printed on recycled paper.

ISBN: 978-1-63277-179-7

QUALITY MANAGEMENT SYSTEM
CERTIFIED BY DNV
ISO/TS 16949

Microchip received ISO/TS-16949:2009 certification for its worldwide headquarters, design and wafer fabrication facilities in Chandler and Tempe, Arizona; Gresham, Oregon and design centers in California and India. The Company's quality system processes and procedures are for its PIC® MCUs and dsPIC® DSCs, KEELOQ® code hopping devices, Serial EEPROMs, microperipherals, nonvolatile memory and analog products. In addition, Microchip's quality system for the design and manufacture of development systems is ISO 9001:2000 certified.

World Wide Sales and Service

AMERICAS

Corporate Office
2355 West Chandler Blvd.
Chandler, AZ 85224-6199
Tel: 480-792-7200
Fax: 480-792-7277
Technical Support:
http://www.microchip.com/support
Web Address:
www.microchip.com

Atlanta
Duluth, GA
Tel: 678-957-9614
Fax: 678-957-1455

Austin, TX
Tel: 512-257-3370

Boston
Westborough, MA
Tel: 774-760-0087
Fax: 774-760-0088

Chicago
Itasca, IL
Tel: 630-285-0071
Fax: 630-285-0075

Cleveland
Independence, OH
Tel: 216-447-0464
Fax: 216-447-0643

Dallas
Addison, TX
Tel: 972-818-7423
Fax: 972-818-2924

Detroit
Novi, MI
Tel: 248-848-4000

Houston, TX
Tel: 281-894-5983
Indianapolis

Noblesville, IN
Tel: 317-773-8323
Fax: 317-773-5453

Los Angeles
Mission Viejo, CA
Tel: 949-462-9523
Fax: 949-462-9608

New York, NY
Tel: 631-435-6000

San Jose, CA
Tel: 408-735-9110

Canada - Toronto
Tel: 905-673-0699
Fax: 905-673-6509

ASIA/PACIFIC

Asia Pacific Office
Suites 3707-14, 37th Floor
Tower 6, The Gateway
Harbour City, Kowloon

Hong Kong
Tel: 852-2943-5100
Fax: 852-2401-3431

Australia - Sydney
Tel: 61-2-9868-6733
Fax: 61-2-9868-6755

China - Beijing
Tel: 86-10-8569-7000
Fax: 86-10-8528-2104

China - Chengdu
Tel: 86-28-8665-5511
Fax: 86-28-8665-7889

China - Chongqing
Tel: 86-23-8980-9588
Fax: 86-23-8980-9500

China - Dongguan
Tel: 86-769-8702-9880

China - Hangzhou
Tel: 86-571-8792-8115
Fax: 86-571-8792-8116

China - Hong Kong SAR
Tel: 852-2943-5100
Fax: 852-2401-3431

China - Nanjing
Tel: 86-25-8473-2460
Fax: 86-25-8473-2470

China - Qingdao
Tel: 86-532-8502-7355
Fax: 86-532-8502-7205

China - Shanghai
Tel: 86-21-5407-5533
Fax: 86-21-5407-5066

China - Shenyang
Tel: 86-24-2334-2829
Fax: 86-24-2334-2393

China - Shenzhen
Tel: 86-755-8864-2200
Fax: 86-755-8203-1760

China - Wuhan
Tel: 86-27-5980-5300
Fax: 86-27-5980-5118

China - Xian
Tel: 86-29-8833-7252
Fax: 86-29-8833-7256

ASIA/PACIFIC

China - Xiamen
Tel: 86-592-2388138
Fax: 86-592-2388130

China - Zhuhai
Tel: 86-756-3210040
Fax: 86-756-3210049

India - Bangalore
Tel: 91-80-3090-4444
Fax: 91-80-3090-4123

India - New Delhi
Tel: 91-11-4160-8631
Fax: 91-11-4160-8632

India - Pune
Tel: 91-20-3019-1500

Japan - Osaka
Tel: 81-6-6152-7160
Fax: 81-6-6152-9310

Japan - Tokyo
Tel: 81-3-6880- 3770
Fax: 81-3-6880-3771

Korea - Daegu
Tel: 82-53-744-4301
Fax: 82-53-744-4302

Korea - Seoul
Tel: 82-2-554-7200
Fax: 82-2-558-5932 or
82-2-558-5934

Malaysia - Kuala Lumpur
Tel: 60-3-6201-9857
Fax: 60-3-6201-9859

Malaysia - Penang
Tel: 60-4-227-8870
Fax: 60-4-227-4068

Philippines - Manila
Tel: 63-2-634-9065
Fax: 63-2-634-9069

Singapore
Tel: 65-6334-8870
Fax: 65-6334-8850

Taiwan - Hsin Chu
Tel: 886-3-5778-366
Fax: 886-3-5770-955

Taiwan - Kaohsiung
Tel: 886-7-213-7828

Taiwan - Taipei
Tel: 886-2-2508-8600
Fax: 886-2-2508-0102

Thailand - Bangkok
Tel: 66-2-694-1351
Fax: 66-2-694-1350

EUROPE

Austria - Wels
Tel: 43-7242-2244-39
Fax: 43-7242-2244-393

Denmark - Copenhagen
Tel: 45-4450-2828
Fax: 45-4485-2829

France - Paris
Tel: 33-1-69-53-63-20
Fax: 33-1-69-30-90-79

Germany - Dusseldorf
Tel: 49-2129-3766400

Germany - Munich
Tel: 49-89-627-144-0
Fax: 49-89-627-144-44

Germany - Pforzheim
Tel: 49-7231-424750

Italy - Milan
Tel: 39-0331-742611
Fax: 39-0331-466781

Italy - Venice
Tel: 39-049-7625286

Netherlands - Drunen
Tel: 31-416-690399
Fax: 31-416-690340

Poland - Warsaw
Tel: 48-22-3325737

Spain - Madrid
Tel: 34-91-708-08-90
Fax: 34-91-708-08-91

Sweden - Stockholm
Tel: 46-8-5090-4654

UK - Wokingham
Tel: 44-118-921-5800
Fax: 44-118-921-5820

01/27/15

© 2015 Microchip Technology Inc.