SST-10-R

Red LED

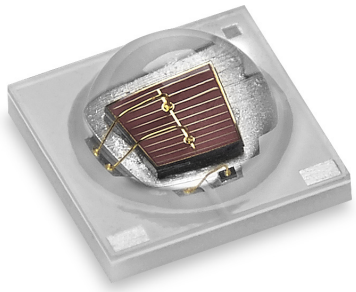

Table of Contents

SST-10 Binning Structure . . .2

Product Shipping & Labeling Information. 3

Optical and Electrical Characteristics 4

B130 - Mech. Dimensions . . .6

B130 - Tape and Reel 7

B90 - Mech. Dimensions 8

B90 - Tape and Reel. 9

Soldering Profile 10

Precautions for Use. 11

History of Changes 12

Features:

- High Power Red LED with Peak Wavelength of 630nm
- Wall-Plug Efficiency: typ. 44% @350mA
- 90 or 130° viewing angle at 50% Iv
- Low Thermal Resistance
- Built-in ESD Protection
- RoHS and REACH compliant

Applications

- Horticulture / Growlights
- Accent and effect lighting
- Architectural lighting
- Stage lighting

PDS-002895 Rev 03

© 2017 Luminus Devices, Inc. - All Rights Reserved

Luminus Devices, Inc. • **T** 408.708.7000 • www.luminus.com
1145 Sonora Court • Sunnyvale, CA 94086

SST-10 Binning Structure

SST-10 Red LEDs are tested for luminous flux and chromaticity at a drive current of 350mA - 20ms single pulse and placed into one of the following luminous flux (FF) and chromaticity (WW) bins:

Flux Bins - Test condition=350mA, 25ºC, 20ms pulse

Flux Bin (FF)	Minimum Flux (mW)	Maximum Flux (mW)
F	230	270
G	270	310
H	310	350
J	350	390

Dominant Wavelength Bins - Test condition=350mA, 25ºC, 20ms pulse

Chromaticity Bin (WW)	Minimum Dominant Wavelength (nm)	Maximum Dominant Wavelength (nm)
615	615	620
620	620	625
625	625	630

*Note: Luminus maintains a +/- 6% tolerance on flux measurements.

Ordering Information

Products	Ordering Part Number	Description
SST-10-R-B90	SST-10-R-B90-xx123	High Power 1-mm² Red LED in a 3535 surface mount package and a 90-degree lens
SST-10-R-B130	SST-10-R-B130-xx123	High Power 1-mm² Red LED in a 3535 surface mount package and a 130-degree lens

© 2017 Luminus Devices, Inc. - All Rights Reserved
Luminus Devices, Inc. • T 408.708.7000 • www.luminus.com
1145 Sonora Court • Sunnyvale, CA 94086

Part Number Nomenclature

SST	—	10	—	<A>	—	<B###>	—	<FF###>

Product Family	LED Emission Area	Color	Package Configuration	Bin kit
SST: Surface Mount Package	10: 1.0 mm^2	<A>: Color R = Red	B90: 90-degree lens B130: 130-degree lens	Flux and Chromaticity bin kit code - See available ordering codes below

SST-10 Bin Kit Order Codes

The following table describes the bin kit ordering codes available for the SST-10 Red LEDs. Each bin kit specifies a minimum flux as well as specific chromaticity bins allowed. Please note that within each kit a maximum flux is not specified and as a result Luminus may ship any part meeting or exceeding the minimum flux specification. Shipments will always meet the listed chromaticity bins. For information on ordering bin kits not listed below, please contact Luminus.

SST-10 Red Bin Kit Order Codes

Color	Luminous Flux		Chromaticity Bins	Kit Number
	Bin Kit Flux Code	Min. Flux		
Red	F	230	615,620,625	F630

Product Shipping & Labeling Information

All SST-10 products are packaged and labeled with their respective bin as outlined in the tables on pages 2 & 3. Each reel will only contain one bin.

SST-10 Red

SST	—	10	—	R	—	BXXX	—	FFWW

Product Family	LED Emission Area	Color	Package Configuration	Bin kit
SST: Surface Mount Package	10: 1.0 mm^2	Color	B90: 90-degree lens B130: 130-degree lens	Flux and Chromaticity bin kit code as outlined above

© 2017 Luminus Devices, Inc. - All Rights Reserved
Luminus Devices, Inc. • T 408.708.7000 • www.luminus.com
1145 Sonora Court • Sunnyvale, CA 94086

Optical and Electrical Characteristics[5]

Optical and Electrical Characteristics at 350mA[1]

Parameter	Symbol	Minimum	Typical	Maximum	Unit
Forward Current[2]	I_f		350	1,500	mA
Output Power	Φ_r		320		mW
Forward Voltage	V_f	1.8	2.1	2.6	V
Wall-Plug Efficiency	WPE		44		%
Viewing Angle	$2\,\varnothing_{1/2}$		90 or 130		degrees
Dominant Wavelength	λ_d	615	621	627	nm
FWHM	$\Delta\lambda_{1/2}$	16	20	24	nm
Thermal Resistance (Electrical)	R_{TH}		5.3		°C/W

Absolute Maximum Ratings[2]

Parameter	Symbol	Rating	Unit
Forward Current[3,4]	I	1.5	A
Power Dissipation	P_D	5.0	W
Reverse Voltage	V_R	5	V
Storage Temperature	T_{STG}	-40~100	°C
Junction Temperature[3,4]	T_J	115 °C	°C
Soldering Temperature	T_{SLD}	JEDEC 020, 260 °C	
ESD Sensitivity (HBM)	V_B	6000	V

Note 1: Ratings are based on operation at a constant junction temperature of $T_j = 25°C$.

Note 2: To prevent damage, please refer to operating conditions and derating curves for appropriate maximum operating conditions

Note 3: Maximum operating case temperature combined with maximum drive current defines the total maximum operating condition for the device. To prevent damage, please follow derating curves for all operating conditions.

Note 4: Luminus SST-10-Red LEDs are designed for operation up to an absolute maximum forward drive current as specified above. Product lifetime data is specified at typical forward drive currents. Sustained operation at absolute maximum currents will result in a reduction of device lifetime compared to typical forward drive currents. Actual device lifetimes will also depend on junction temperature. Refer to the current vs. junction temperature derating curves for further information. In pulsed operation, rise time from 10-90% of forward current should be larger than 0.5 microseconds.

Note 5: Caution must be taken not to stare at the light emitted from these LEDs. Under special circumstances, the high intensity could damage the eye.

© 2017 Luminus Devices, Inc. - All Rights Reserved
Luminus Devices, Inc. • T 408.708.7000 • www.luminus.com
1145 Sonora Court • Sunnyvale, CA 94086

Optical and Electrical Characteristics

Relative Output Flux vs. Forward Current

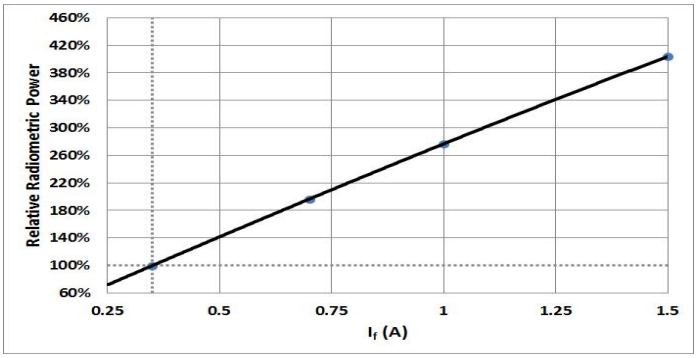

Forward Current vs. Forward Voltage

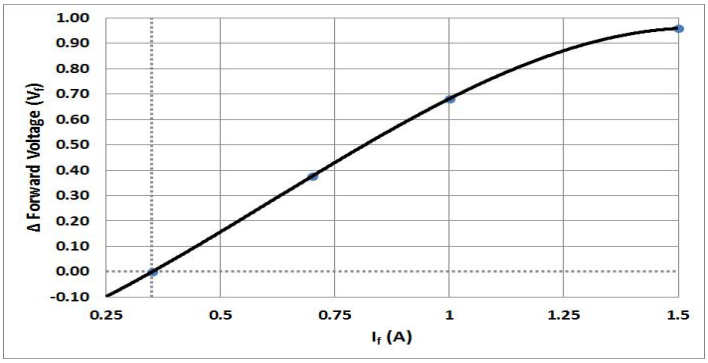

Relative Output Flux vs. Junction Temperature

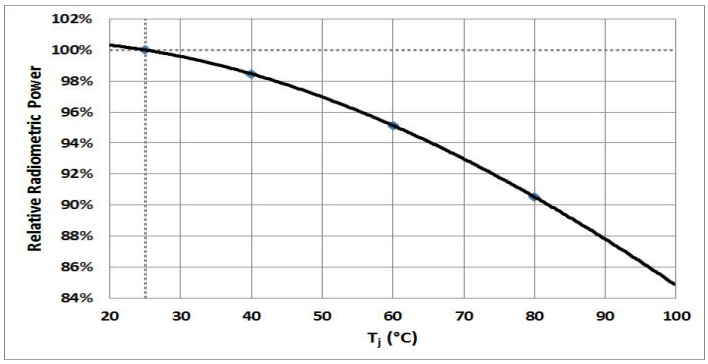

Typical Spectra

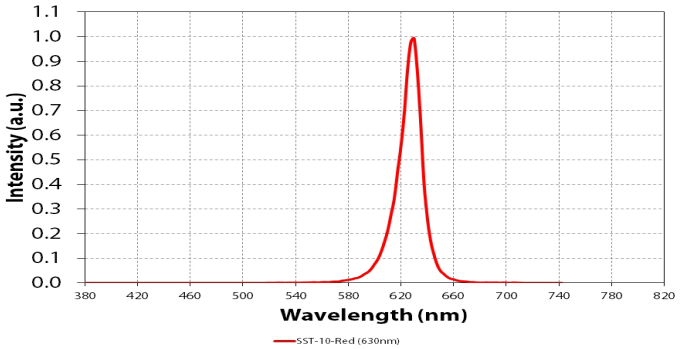

Typical Polar Radiation Plot - B130

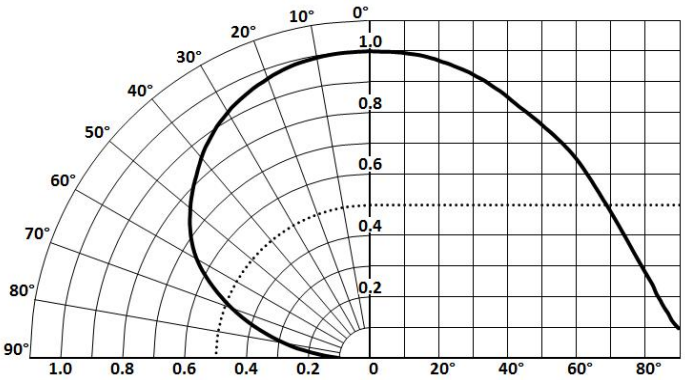

Typical Polar Radiation Plot - B90

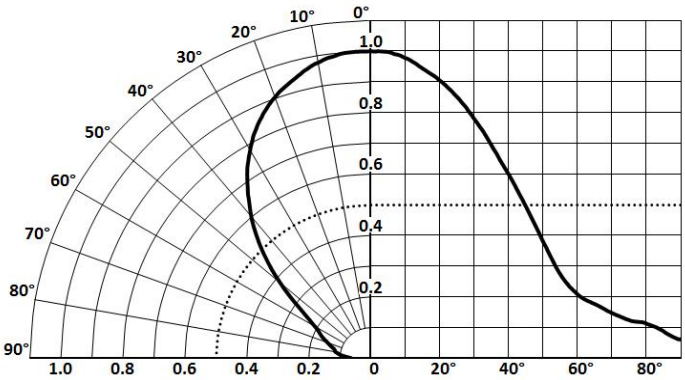

 © 2017 Luminus Devices, Inc. - All Rights Reserved

Luminus Devices, Inc. • T 408.708.7000 • www.luminus.com
1145 Sonora Court • Sunnyvale, CA 94086

Mechanical Dimensions - B130 Package

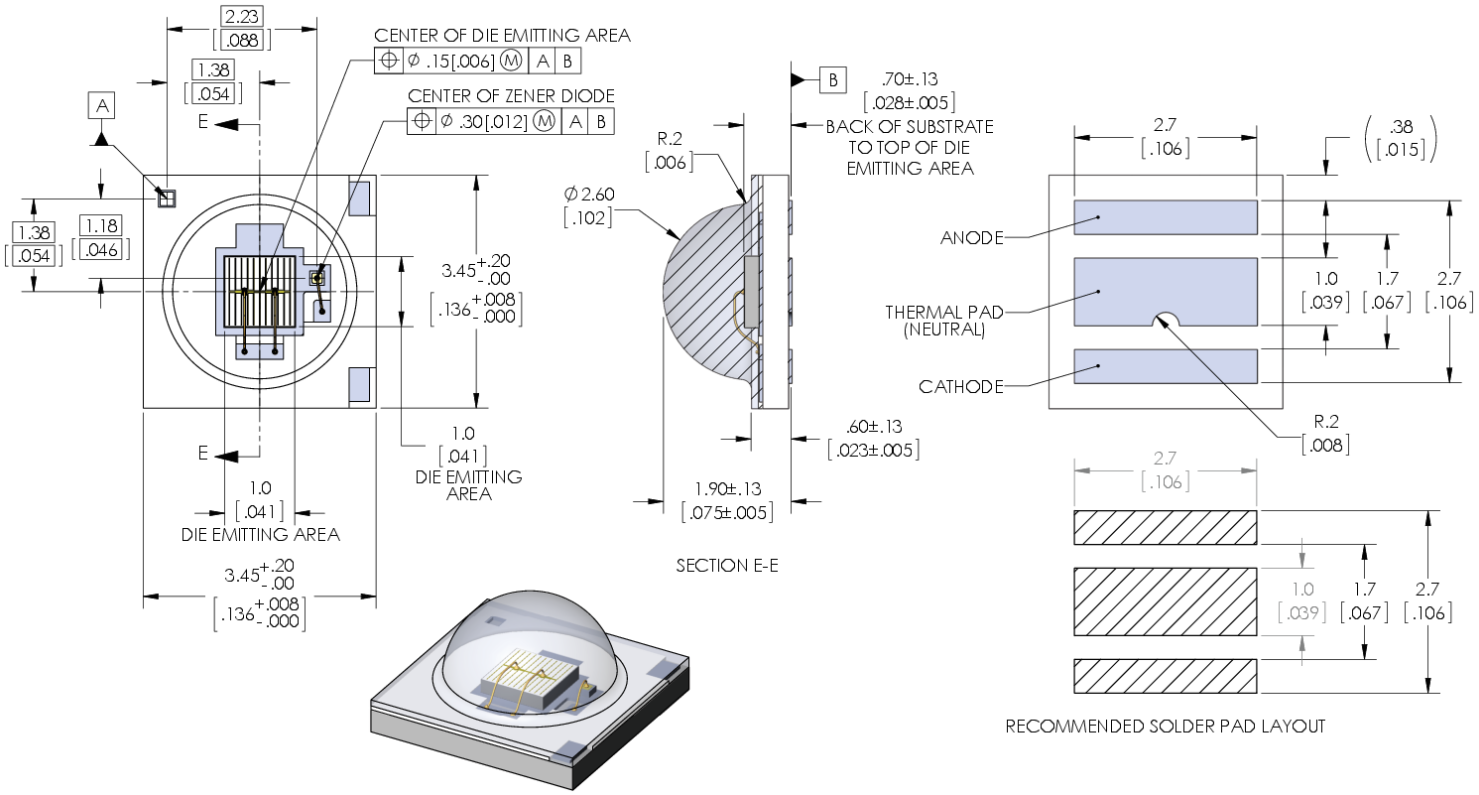

© 2017 Luminus Devices, Inc. - All Rights Reserved
Luminus Devices, Inc. • T 408.708.7000 • www.luminus.com
1145 Sonora Court • Sunnyvale, CA 94086

Tape and Reel - B130 Package

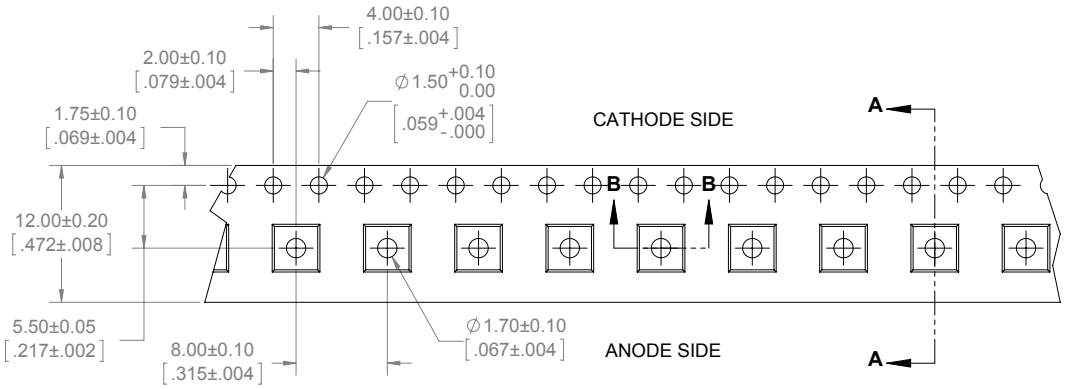

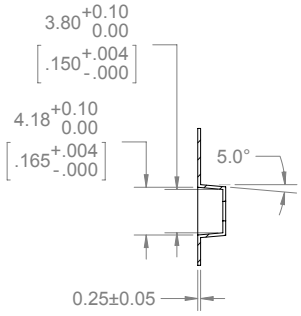

SECTION A-A

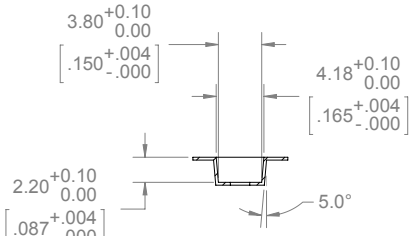

SECTION B-B

NOTES:

1. FINAL TAPE AND REEL PACKAGING MUST MEET THE REQUIREMENTS OF JEDEC-STD-033, LEVEL 2A.
2. LEAVE 304.8mm [12.00 in] OF TAPE EMPTY FOR LEAD IN (38 EMPTY POCKETS).
3. LEAVE 457.2mm [18.00 in] OF TAPE EMPTY FOR TRAILER (57 EMPTY POCKETS).
4. MUST COMPLY TO EIA-481-C-2003

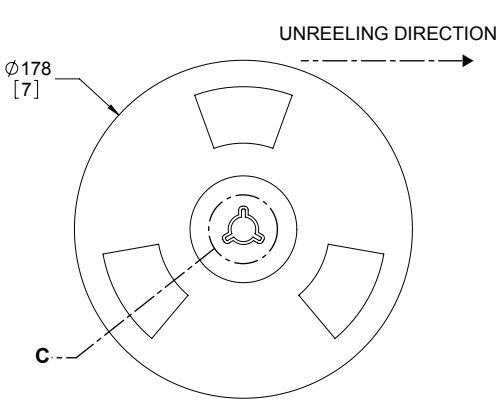

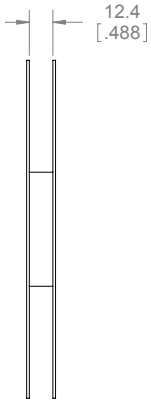

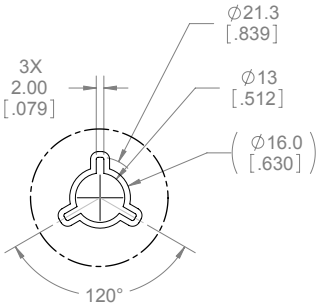

DETAIL C

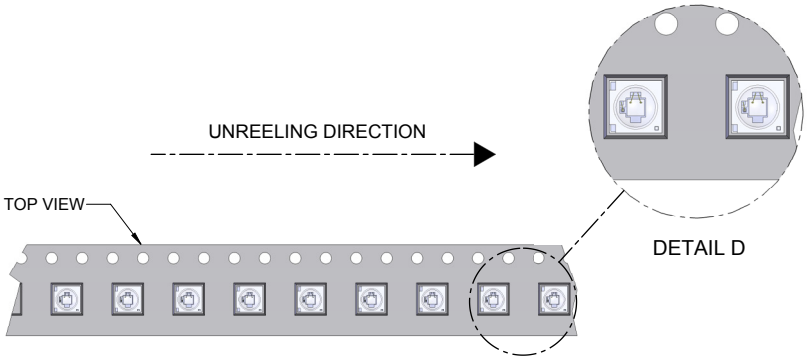

© 2017 Luminus Devices, Inc. - All Rights Reserved
Luminus Devices, Inc. • T 408.708.7000 • www.luminus.com
1145 Sonora Court • Sunnyvale, CA 94086

Mechanical Dimensions - B90 Package

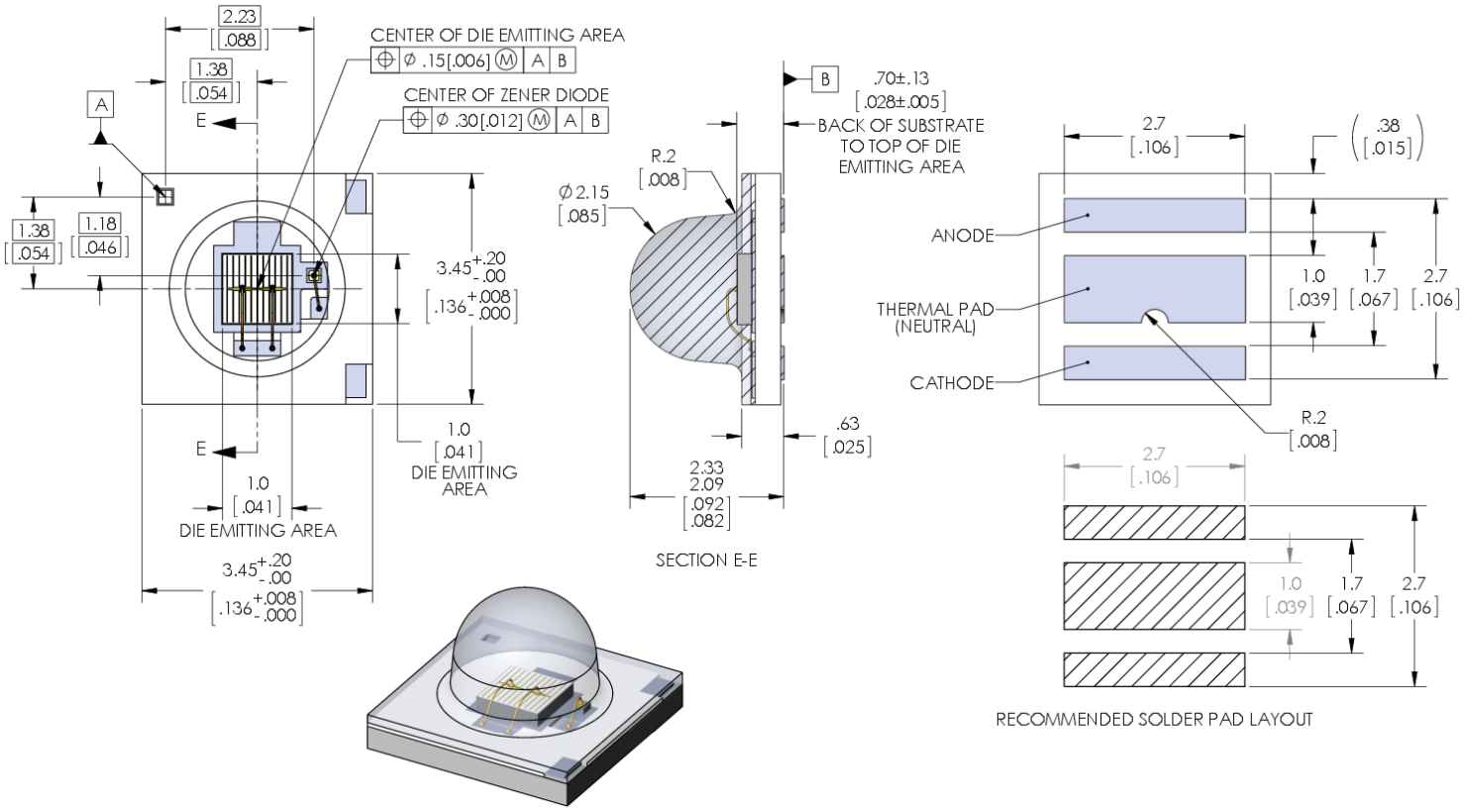

© 2017 Luminus Devices, Inc. - All Rights Reserved
Luminus Devices, Inc. • T 408.708.7000 • www.luminus.com
1145 Sonora Court • Sunnyvale, CA 94086

Tape and Reel - B90 Package

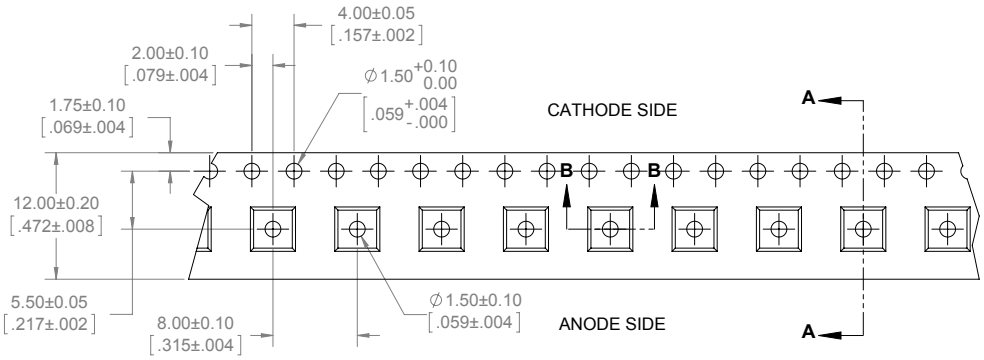

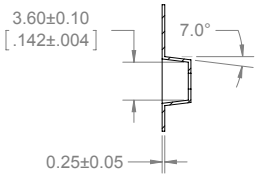

SECTION A-A

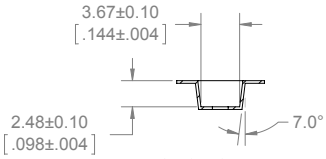

SECTION B-B

NOTES:

1. FINAL TAPE AND REEL PACKAGING MUST MEET THE REQUIREMENTS OF JEDEC-STD-033, LEVEL 2A.
2. LEAVE 304.8mm [12.00 in] OF TAPE EMPTY FOR LEAD IN (38 EMPTY POCKETS).
3. LEAVE 457.2mm [18.00 in] OF TAPE EMPTY FOR TRAILER (57 EMPTY POCKETS).
4. MUST COMPLY TO EIA-481-C-2003

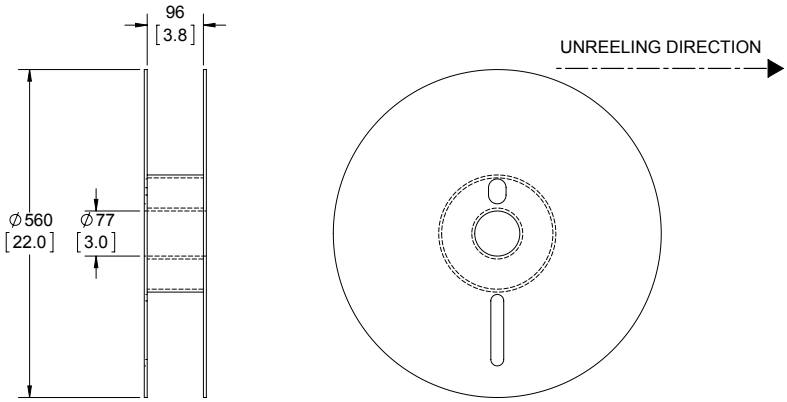

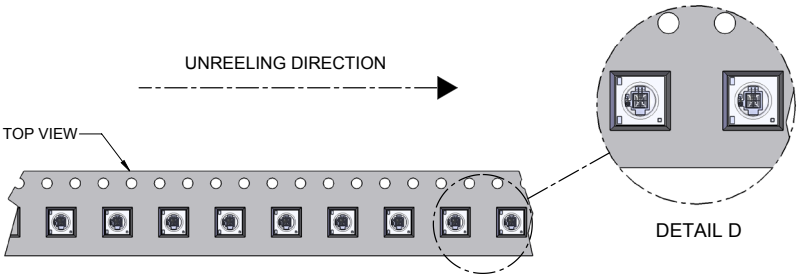

© 2017 Luminus Devices, Inc. - All Rights Reserved
Luminus Devices, Inc. • T 408.708.7000 • www.luminus.com
1145 Sonora Court • Sunnyvale, CA 94086

Soldering Profile

Profile Feature	Sn-Pb Eutectic Assembly	Pb-Free Assembly
Preheat & Soak Temperature min (Tsmin) Temperature max (Tsmax) Time (Tsmin to Tsmax) (ts)	 100 °C 150 °C 60-120 seconds	 150 °C 200 °C 60-120 seconds
Average ramp-up rate (Tsmax to Tp)	3 °C/second max	3 °C/second max
Liquidous temperature (TL) Time at liquidous (tL)	183 °C 60-150 seconds	217 °C 60-150 seconds
Peak package body temperature (Tp)*	230 °C ~235 °C	255 °C ~260 °C
Classification temperature (Tc)	235 °C	260 °C
Time (tp) within 5 °C of the specified classification temperature (Tc)**	20 seconds	30 seconds
Average ramp-down rate (Tp to Tsmax)	6 °C/second max	6 °C/second max
Time 25 °C to peak temperature	6 minutes max	8 minutes max

* Tolerance for peak profile temperature(Tp) is defined as a supplier minimum and a user maximum.
** Tolerance for time at peak profile temperature(tp) is defined as a supplier minimum and a user maximum.

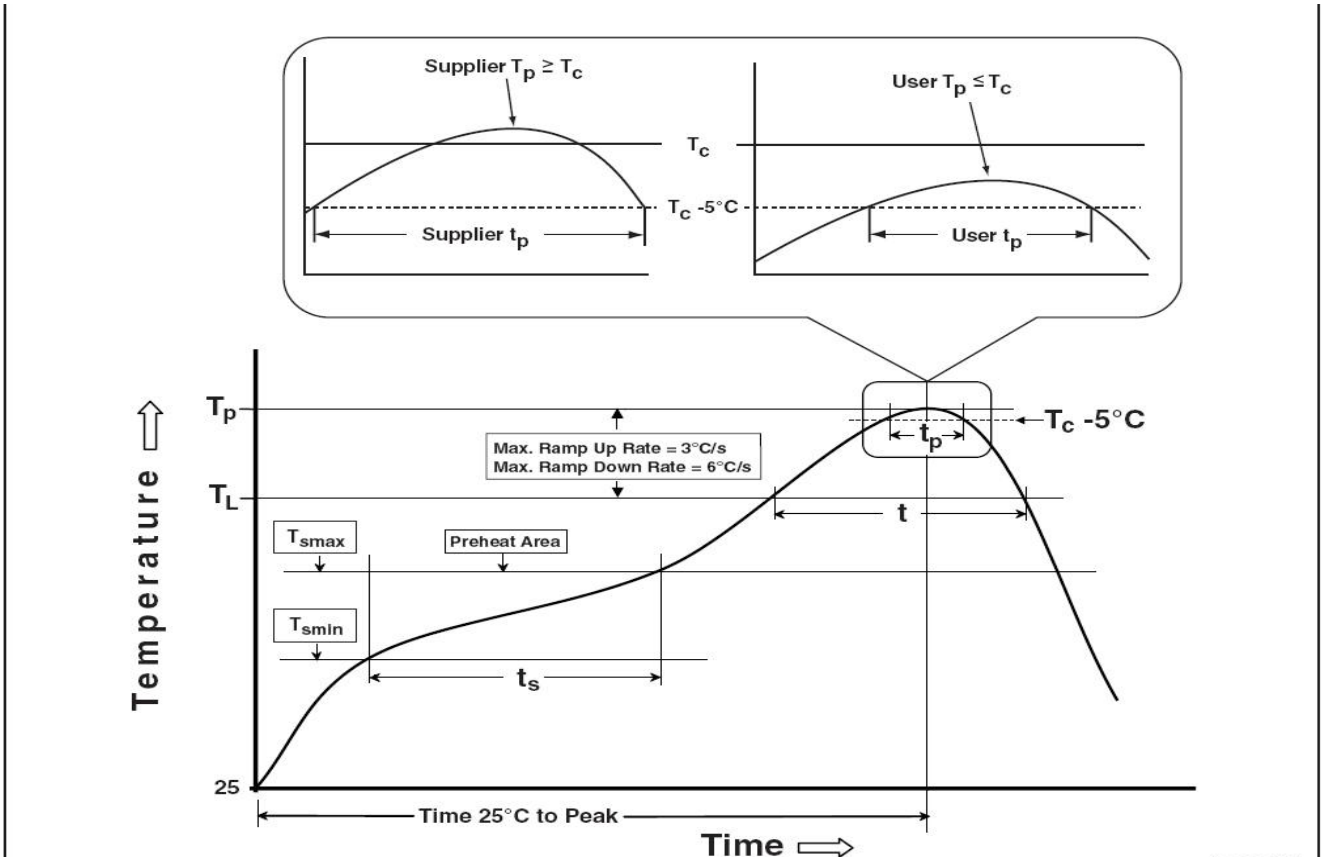

© 2017 Luminus Devices, Inc. - All Rights Reserved
Luminus Devices, Inc. • T 408.708.7000 • www.luminus.com
1145 Sonora Court • Sunnyvale, CA 94086

Precautions for Use

Storage:

1. Before opening the package

The LEDs should be kept at a temperature lower than 40° C and relative humidity lower than 90%. The LEDs should be used within a year. When storing the LEDs, moisture proof package with absorbent material (silica gel) is recommended.

2. After opening the package

The LEDs should be kept at temperature lower than 30° C and relative humidity lower than 60%. The LEDs should be soldered within 168 hours (7days) after opening the moisture proof package.

If unused LEDs remain, they should be stored in moisture proof packages, such as sealed containers with moisture proof package within absorbent material (silica gel). It is also recommended to return the unused LEDs to the original moisture proof package and to seal the moisture proof package again.

If the moisture absorbent material (silica gel) vapors or expires the expiration date, baking treatment should be performed by using the following conditions : 60 °C for 20 hours.

The LEDs electrode and leadframe comprise a silver plated copper alloy. The silver surface may be affected by environments. Please avoid conditions which may cause the LEDs to corrode or discolore. The corrosion or discoloration might lower solderability or affect optical characteristics.

Please avoid rapid transition in ambient temperature, especially in high humidity environments where condensation can occur.

Static Electricity:

1. The products are sensitive to static electricity, and care should be taken when handling them.

2. Static electricity or surge voltage will damage the LEDs. It is recommended to wear a anti-electrostatic wristband or anti-electrostatic gloves when handling the LEDs.

3. All devices, equipment and machinery must be properly grounded. It is recommended that measures be taken against surge voltage to the equipment that mounts the LEDs.

© 2017 Luminus Devices, Inc. - All Rights Reserved
Luminus Devices, Inc. • **T** 408.708.7000 • www.luminus.com
1145 Sonora Court • Sunnyvale, CA 94086

History of Changes

Rev		Description of Change
01	06/10/2016	Initial Release - Preliminary Specifications
02	04/03/2017	Updated title in "Relative Output Flux vs. Junction Temperature" graph and address..
03	07/31/2017	Corrected ordering information typo on page 2, dissipated power value on page 4 and other various minor typos.

© 2017 Luminus Devices, Inc. - All Rights Reserved
Luminus Devices, Inc. • T 408.708.7000 • www.luminus.com
1145 Sonora Court • Sunnyvale, CA 94086