KEMET Part Number: SSR21NH-M07890

KEMET, SSR21NV-M/NH-M, AC Line Filters, Common Mode, 0.089 H

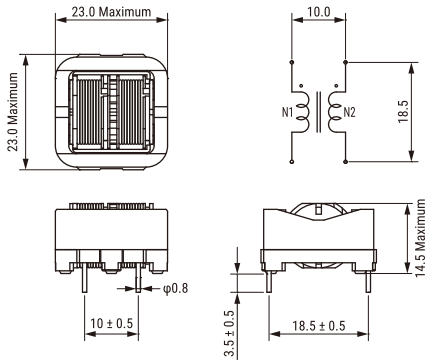

General Information	
Series:	SSR21NV-M/NH-M
Style:	Through-Hole
Features:	High Performance, High Impedance, Strong Inductance
RoHS:	Yes
Miscellaneous:	65 (K) Temperature Rise Max.

Specifications	
Voltage AC:	250 VAC
Inductance:	89 mH (10 kHz)
Temperature Range:	-25/+120C
DC Resistance:	1.05 Ohms

Dimensions	
L	23mm MAX
T	23mm MAX
H	14.5mm MAX
LL	3.5mm +/-0.5mm
S	18.5mm +/-0.5mm

Packaging Specifications	
Packaging:	Tray
Packaging Quantity:	420
Weight:	13 g

Statements of suitability for certain applications are based on our knowledge of typical operating conditions for such applications, but are not intended to constitute - and we specifically disclaim - any warranty concerning suitability for a specific customer application or use. This Information is intended for use only by customers who have the requisite experience and capability to determine the correct products for their application. Any technical advice inferred from this Information or otherwise provided by us with reference to the use of our products is given gratis, and we assume no obligation or liability for the advice given or results obtained.

© 2006 - 2018 KEMET