UNCONTROLLED DOCUMENT

PART NUMBER	REV.
SSP-01TWB3SWB12	B

REV.	E.C.N. NUMBER AND REVISION COMMENTS	DATE
A	E.C.N. #10897.	7.30.02
B	E.C.N. #11148	11.16.06

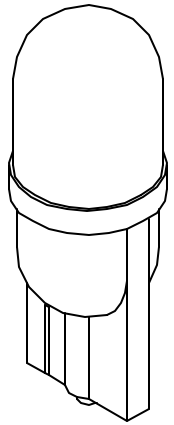

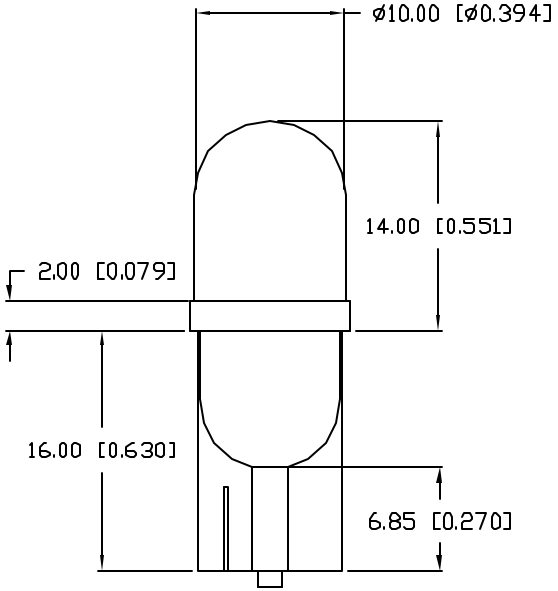

ELECTRO-OPTICAL CHARACTERISTICS T_A=25°C V_f=12V

PARAMETER	MIN	TYP	MAX	UNITS	TEST COND
PEAK WAVELENGTH		590		nm	
FORWARD VOLTAGE		12	14.0	V_f	
REVERSE VOLTAGE	5.0			V_r	I_r=100µA
AXIAL INTENSITY		7000		mcd	V_f=12V
VIEWING ANGLE		30		2x theta	
EMITTED COLOR:	SUPER YELLOW				
EPOXY LENS FINISH:	WATER CLEAR LENS				

LIMITS OF SAFE OPERATION AT 25°C PER DIE

	PARAMETER	MAX	UNITS
	PEAK FORWARD VOLTAGE	14	V
A	STEADY CURRENT	20	mA
	POWER DISSIPATION	105	mW
	DERATE FROM 25°C	-1.2	mW/°C
	OPERATING, STORAGE TEMP.	-40 TO +85	°C

B

UNCONTROLLED DOCUMENT

*UNLESS OTHERWISE SPECIFIED TOLERANCES PER DECIMAL PRECISION ARE: X=±1 (±0.039), X.X=±0.5 (±0.020), X.XX=±0.25 (±0.010), X.XXX=±0.127 (±0.005). LEAD SIZE=±0.05 (±0.002), LEAD LENGTH=±0.75 (±0.030). MIN= $^{\pm\text{DECIMAL PRECISION}}_{-0.00}$ MAX.= $^{+0.00}_{-\text{DECIMAL PRECISION}}$

REV.	PART NUMBER
B	SSP-01TWB3SWB12

LED MINATURE WEDGE BASE LAMP,
SUPER YELLOW, WATER CLEAR LENS.

CONFIDENTIAL INFORMATION
THE INFORMATION CONTAINED IN THIS DOCUMENT IS THE PROPERTY OF SUNBRITE LEDS. EXCEPT AS SPECIFICALLY AUTHORIZED IN WRITING BY SUNBRITE LEDS, THE HOLDER OF THIS DOCUMENT SHALL KEEP ALL INFORMATION CONTAINED HEREIN CONFIDENTIAL AND SHALL PROTECT SAME IN WHOLE OR IN PART FROM DISCLOSURE AND DISSEMINATION TO ALL THIRD PARTIES.

RELIABILITY NOTE
OUR MANY YEARS OF EXPERIENCE DATA ACCUMULATION INDICATE THAT SOLDER HEAT IS A MAJOR CAUSE OF EARLY AND FUTURE FAILURE. PLEASE PAY ATTENTION TO YOUR SOLDERING PROCESS.

286 E. HELEN ROAD
PALATINE, IL 60067-6976
PHONE: +1.847.359.2790
FAX: +1.847.359.2867
WEB: www.sunbriteleds.com

DRAWN:	CHECKED:	APPROVED:	DATE: 11.16.06
JC			PAGE: 1 OF 1