# SSL1750

## SMPS control IC for LED drivers

Rev. 01 — 15 September 2008 Product data sheet

## 1. General description

The SSL1750 is a Switched Mode Power Supply (SMPS) controller IC, suitable for driving LED applications from 25 W up to 250 W. For LED power requirements below 25 W the SSL152x family and SSL1623PH are the best choice.

The SSL1750 combines a controller for Power Factor Correction (PFC) and a flyback controller. Its high level of integration allows the design of a cost-effective LED power supply with a very low number of external components.

The special built-in green functions provide high efficiency at all power levels. This applies to quasi-resonant operation at high power levels, quasi-resonant operation with valley skipping, as well as to reduced frequency operation at lower power levels. At low power levels, the PFC switches over to burst mode control to maintain high efficiency. In burst mode, soft-start and soft-stop functions are added to eliminate audible noise.

During low power conditions, the flyback controller switches to frequency reduction mode and limits the peak current to 25 % of its maximum value. This will ensure high efficiency at low power while minimizing audible noise from the transformer.

The proprietary high voltage BCD800 process makes direct start-up possible from the rectified universal mains voltage in an effective and green way. A second low voltage Silicon On Insulator (SOI) IC is used for accurate, high speed protection functions and control.

The SSL1750 enables highly efficient and reliable LED drivers with power requirements of up to 250 W to be designed easily and with the minimum number of external components.

## 2. Features

### 2.1 Distinctive features

- Integrated PFC and flyback controller
- Universal mains supply operation (70 V to 276 V (AC))
- High level of integration resulting in a very low external component count and a cost effective design

### 2.2 Green features

- On-chip start-up current source

### 2.3 PFC green features

- Valley/zero voltage switching for minimum switching losses (patented)

NXP founded by Philips

- Frequency limitation to reduce switching losses
- Burst mode operation if a low load is detected at the flyback output (patented)

### 2.4 Flyback green features

- Valley switching for minimum switching losses (patented)
- Frequency reduction with fixed minimum peak current at low power operation to maintain high efficiency at low output power levels

### 2.5 Protection features

- Safe restart mode for system fault conditions
- Continuous mode protection by means of demagnetization detection for both converters (patented)
- Undervoltage protection (foldback during overload)
- Accurate OverVoltage Protection (OVP) for both converters (adjustable for flyback converter)
- Open control loop protection for both converters
- IC overtemperature protection
- Low and adjustable OverCurrent Protection (OCP) trip level for both converters
- Soft-(re)start for both converters
- Soft-stop PFC to minimize audible noise
- Mains undervoltage protection / brownout protection
- General purpose input for latched protection, e.g. to be used for system OverTemperature Protection (OTP)

## 3. Applications

The device can be used in all SSL applications that require an efficient and cost-effective LED power supply solution up to 250 W.

Key applications for the SSL1750 are:

- Indoor LED applications (> 25 W):
  - Spot lights
  - Down lights
  - Other SSL consumer/industrial fixtures
- Outdoor LED applications (> 25 W):
  - Street lighting
  - Area lighting (e.g. car parking)
  - Tunnel lighting



© NXP B.V. 2008. All rights reserved.

# 4. Ordering information

**Table 1. Ordering information**

| Type number | Package | | |
|---|---|---|---|
| | Name | Description | Version |
| SSL1750T | SO16 | plastic small outline package; 16 leads; body width 3.9 mm | SOT109-1 |

# 5. Block diagram

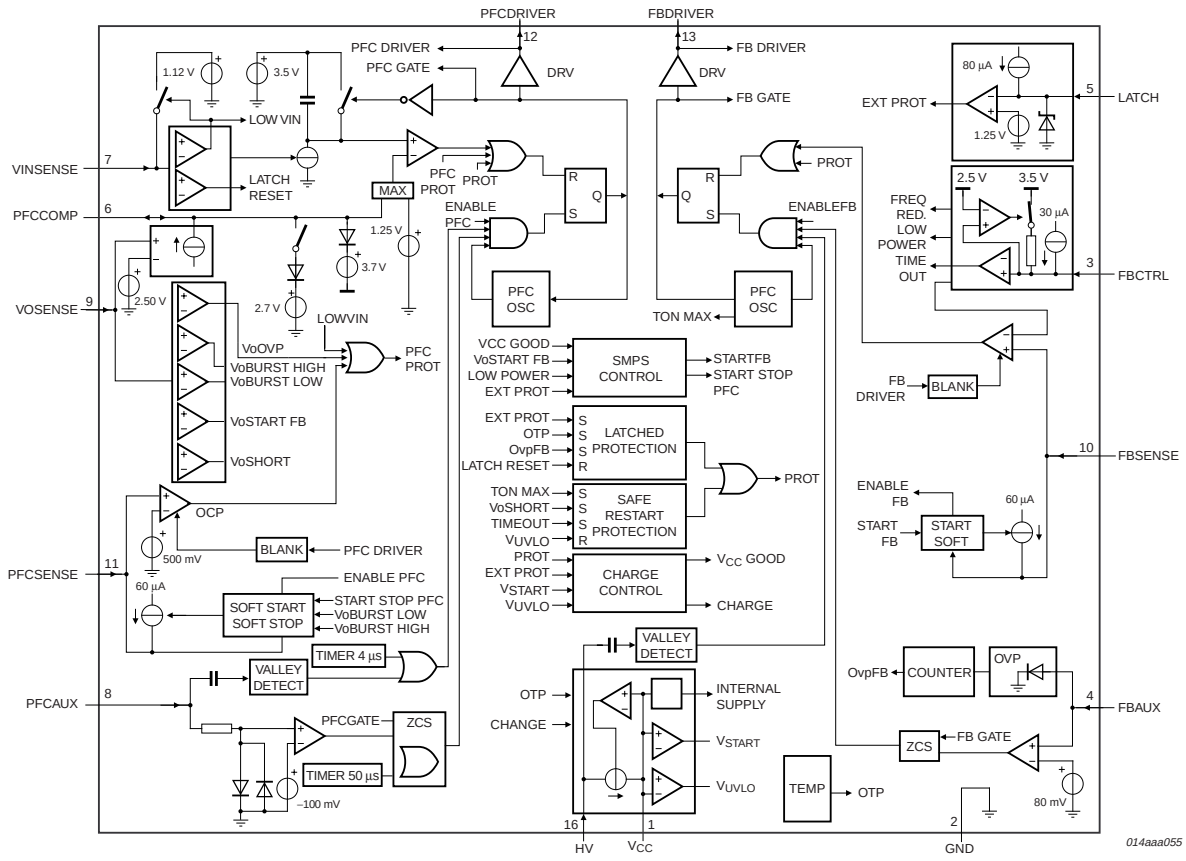


**Fig 1. Block diagram**



© NXP B.V. 2008. All rights reserved.

# 6. Pinning information

## 6.1 Pinning

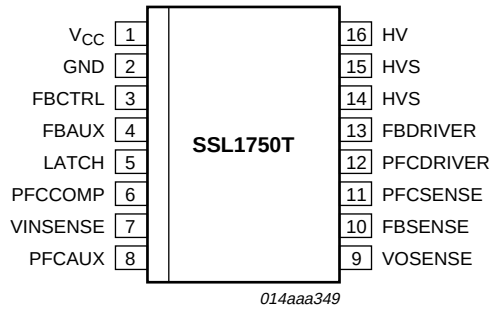


**Fig 2. Pin configuration for SSL1750T (SOT109-1)**

## 6.2 Pin description

**Table 2. Pin description**

| Symbol | Pin | Description |
|---|---|---|
| $V_{CC}$ | 1 | supply voltage |
| GND | 2 | ground |
| FBCTRL | 3 | control input for flyback |
| FBAUX | 4 | input from auxiliary winding for demagnetization timing and overvoltage protection for flyback |
| LATCH | 5 | general purpose protection input |
| PFCCOMP | 6 | frequency compensation pin for PFC |
| VINSENSE | 7 | sense input for mains voltage |
| PFCAUX | 8 | input from auxiliary winding for demagnetization timing for PFC |
| VOSENSE | 9 | sense input for PFC output voltage |
| FBSENSE | 10 | programmable current sense input for flyback |
| PFCSENSE | 11 | programmable current sense input for PFC |
| PFCDRIVER | 12 | gate driver output for PFC |
| FBDRIVER | 13 | gate driver output for flyback |
| HVS | 14 | high voltage safety spacer, not connected |
| HVS | 15 | high voltage safety spacer, not connected |
| HV | 16 | high voltage start-up and valley sensing of flyback part |


© NXP B.V. 2008. All rights reserved.

# 7. Functional description

## 7.1 General control

The SSL1750 contains a controller for a power factor correction circuit as well as a controller for a flyback circuit. The SSL1750 as LED driver can be used as current source to drive LEDs directly, as shown in Figure 3. The SSL1750 can also be used as a typical AC/DC converter to drive multiple DC/DC LED drivers as shown in Figure 4.

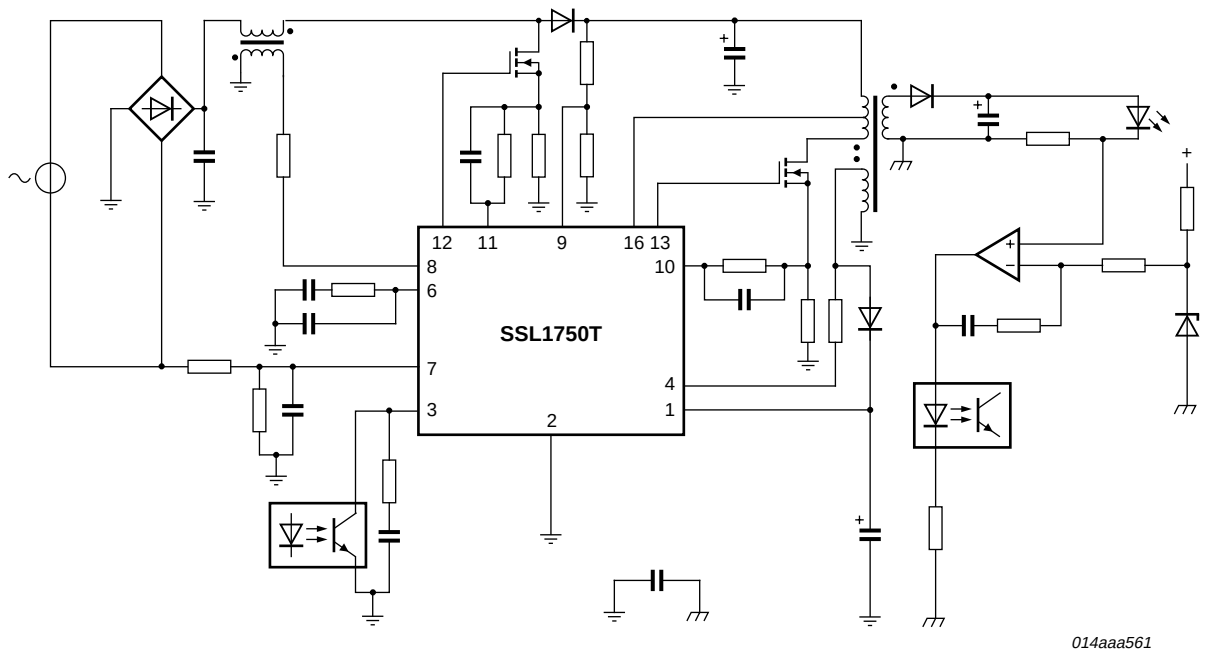


**Fig 3. Application circuit**



© NXP B.V. 2008. All rights reserved.

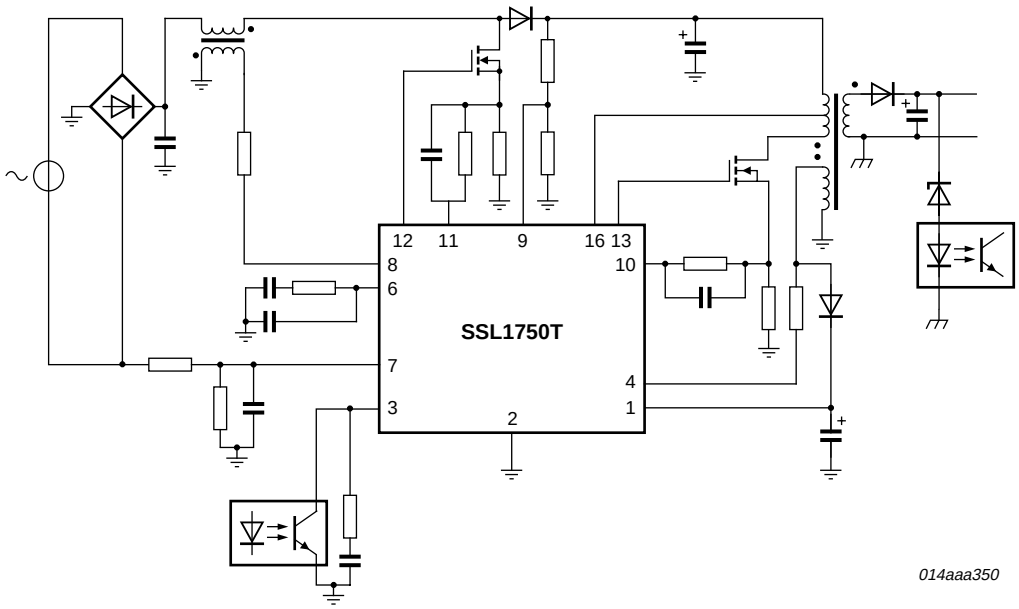


**Fig 4. Typical configuration of SSL1750**

### 7.1.1 Start-up and undervoltage lockout

Initially the capacitor on pin $V_{CC}$ is charged from the high voltage mains via pin HV.

As long as $V_{CC}$ is below $V_{trip}$, the charge current is low. This protects the IC in case pin $V_{CC}$ is shorted to ground. For a short start-up time the charge current above $V_{trip}$ is increased until $V_{CC}$ reaches $V_{th(UVLO)}$. If $V_{CC}$ is between $V_{th(UVLO)}$ and $V_{startup}$, the charge current is low again, ensuring a low duty cycle during fault conditions.

The control logic activates the internal circuitry and switches off the charge current when the voltage on pin $V_{CC}$ passes the $V_{startup}$ level. First, the output on pin LATCH is activated and the soft-start capacitors on the pins PFCSENSE and FBSENSE are charged. When the voltage on pin LATCH exceeds the $V_{en(LATCH)}$ voltage and the soft-start capacitor on pin PFCSENSE is charged, the PFC circuit is activated. The supply current from the pin HV is then switched on again and the PFC circuit charges the $C_{bus}$ capacitor. When the voltage on pin VOSENSE reaches the $V_{start(fb)}$ level, the charge current is switched off and the flyback converter is activated (providing the soft-start capacitor on pin FBSENSE is charged). The output voltage of the flyback converter is then regulated to its nominal output voltage. The IC supply is taken over by the auxiliary winding of the flyback converter. See Figure 5.

When the PFC is started, there is initially no supply takeover from the auxiliary winding. To make a small $V_{CC}$ capacitor possible, the $V_{CC}$ voltage is regulated to the $V_{startup}$ level, as long as the flyback converter has not yet started. Regulation is done by hysteretic control with a limited (high level) charge current. The hysteresis is typically 300 mV.

If during start-up pin LATCH does not reach the $V_{en(LATCH)}$ level before $V_{CC}$ reaches $V_{th(UVLO)}$, its output is deactivated and the charge current is switched on again.



© NXP B.V. 2008. All rights reserved.

As soon as the flyback converter is started, the voltage on pin FBCTRL is monitored. If the output voltage of the flyback converter does not reach its intended regulation level in a predefined time, the voltage on pin FBCTRL reaches the $V_{to(FBCTRL)}$ level and an error is assumed. The SSL1750 then initiates a safe restart.

When one of the protection functions is activated, both converters stop switching and the $V_{CC}$ voltage drops to $V_{th(UVLO)}$. A latched protection recharges the $V_{CC}$ capacitor via pin HV, but does not restart the converters. For a safe restart protection, the capacitor is recharged via pin HV and the device restarts (see Figure 1).

In the event of an overvoltage protection of the PFC circuit ($V_I$ on pin VOSENSE > $V_{ovp(VOSENSE)}$), only the PFC controller stops switching until the voltage on pin VOSENSE drops below $V_{ovp(VOSENSE)}$ again. Also, if a mains undervoltage is detected ($V_I$ on pin VINSENSE < $V_{stop(VINSENSE)}$), only the PFC controller stops switching until $V_I$ on pin VINSENSE > $V_{start(VINSENSE)}$ again.

When the voltage on pin $V_{CC}$ drops below the undervoltage lockout level, both controllers stop switching and reenter the safe restart mode. In the safe restart mode the driver outputs are disabled and pin $V_{CC}$ voltage is recharged via pin HV.



© NXP B.V. 2008. All rights reserved.

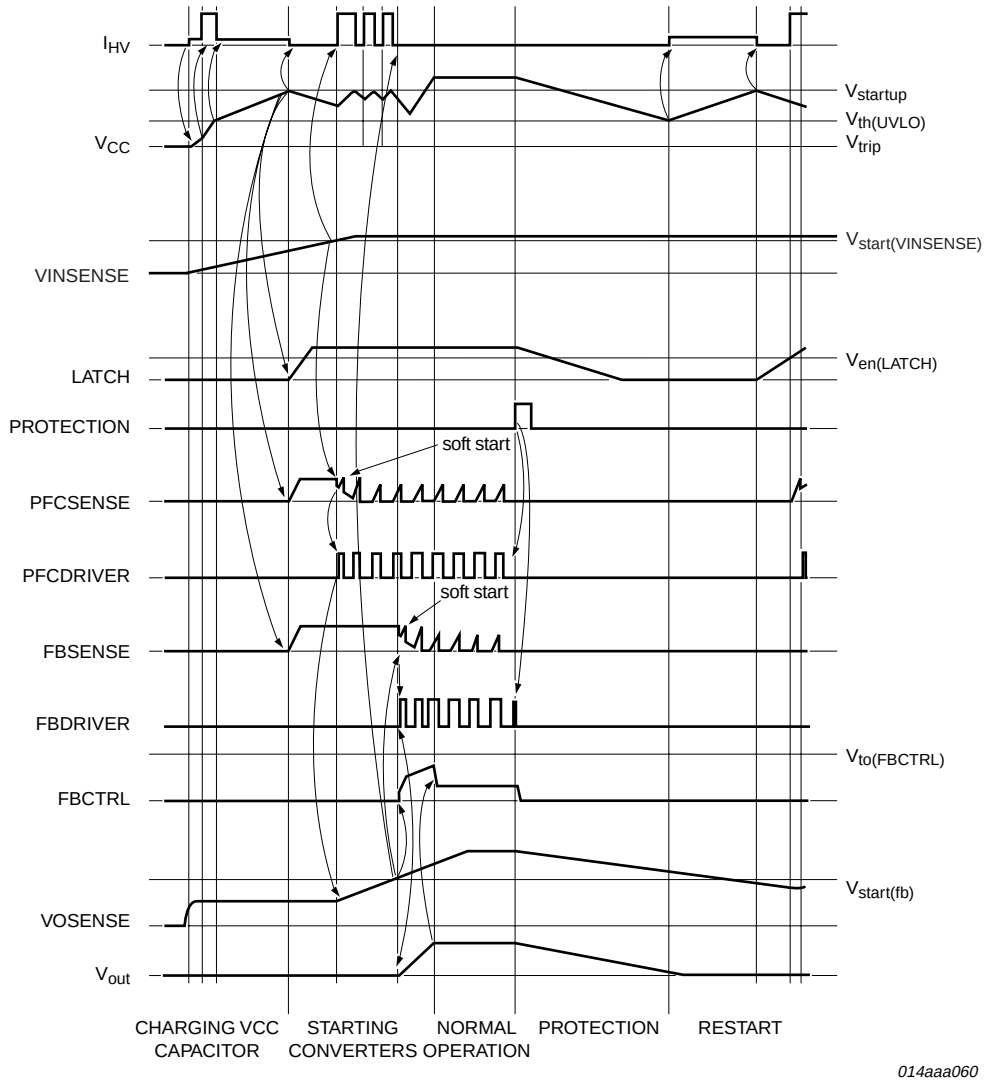


**Fig 5. Start-up sequence, normal operation, and restart sequence**

### 7.1.2 Supply management

All internal reference voltages are derived from a temperature compensated and trimmed on-chip band gap circuit. Internal reference currents are derived from a temperature compensated and trimmed on-chip current reference circuit.

### 7.1.3 Latch input

The pin LATCH is a general purpose input pin, which can be used to switch off both converters. The pin sources a current, $I_{O(LATCH)}$ on the pin LATCH (typical 80 μA). Switching of both converters is stopped as soon as the voltage on this pin drops below 1.25 V.

At initial start-up switching is inhibited until the voltage on pin LATCH is above 1.35 V (typ). No internal filtering is done on this pin. An internal Zener clamp of 2.7 V (typ) protects this pin from excessive voltages.



© NXP B.V. 2008. All rights reserved.

### 7.1.4 Fast latch reset

In a typical application, the mains can be interrupted briefly to reset the latched protection. The PFC bus capacitor, $C_{bus}$, does not have to discharge for this latched protection to reset.

Typically, the PFC bus capacitor, $C_{bus}$, has to discharge for the $V_{CC}$ to drop to this reset level. When the latched protection is set, the clamping circuit of the VINSENSE circuit is disabled (see also Section 7.2.8). As soon as the VINSENSE voltage drops below 750 mV (typ) and is then raised to 870 mV (typ), the latched protection is reset.

The latched protection will also be reset by removing both the voltage on pin $V_{CC}$ and on pin HV.

### 7.1.5 Overtemperature protection (OTP)

An accurate internal temperature protection is provided in the circuit. When the junction temperature exceeds the thermal shutdown temperature, the IC only stops switching. As long as OTP is active, the $V_{CC}$ capacitor is not recharged from the HV mains. The OTP circuit is supplied from pin HV if the $V_{CC}$ supply voltage is not sufficient.

OTP is a latched protection. It can be reset by removing both the voltage on pin $V_{CC}$ and on pin HV or by the fast latch reset function, see Section 7.1.4.

## 7.2 Power factor correction circuit

The power factor correction circuit operates in quasi-resonant or discontinuous conduction mode with valley switching. The next primary stroke is only started when the previous secondary stroke has ended and the voltage across the PFC MOSFET has reached a minimum value. The voltage on pin PFCAUX is used to detect transformer demagnetization and the minimum voltage across the external PFC MOSFET switch.

### 7.2.1 $t_{on}$ control

The power factor correction circuit is operated in $t_{on}$ control. The resulting mains harmonic reduction of a typical application is well within the class-D requirements.

### 7.2.2 Valley switching and demagnetization (pin PFCAUX)

The PFC MOSFET is switched on after the transformer is demagnetized. Internal circuitry connected to pin PFCAUX detects the end of the secondary stroke. It also detects the voltage across the PFC MOSFET. The next stroke is started if the voltage across the PFC MOSFET is at its minimum in order to reduce switching losses and ElectroMagnetic Interference (EMI) (valley switching).

If no demagnetization signal is detected on pin PFCAUX, the controller generates a Zero Current Signal (ZCS), 50 µs (typ) after the last PFC gate signal.

If no valley signal is detected on pin PFCAUX, the controller generates a valley signal 4 µs (typ) after demagnetization was detected.

To protect the internal circuitry, for example during lightning events, it is advisable to add a 5 kΩ series resistor to this pin. To prevent incorrect switching due to external disturbance, the resistor should be placed close to the IC on the printed-circuit board.


© NXP B.V. 2008. All rights reserved.

For applications with high transformer ringing frequencies (after the secondary stroke), Pin PFCAUX should be connected via a capacitor and a resistor to the auxiliary winding. A diode must then be placed from the ground connection to pin PFCAUX.

### 7.2.3 Frequency limitation

To optimize the transformer and minimize switching losses, the switching frequency is limited to $f_{sw(PFC)max}$. If the frequency for quasi-resonant operation is above the $f_{sw(PFC)max}$ limit, the system switches over to discontinuous conduction mode. Also here, the PFC MOSFET is only switched on at a minimum voltage across the switch (valley switching).

### 7.2.4 Mains voltage compensation (pin VINSENSE)

The mathematical equation for the transfer function of a power factor corrector contains the square of the mains input voltage. In a typical application this results in a low bandwidth for low mains input voltages, while at high mains input voltages the Mains Harmonic Reduction (MHR) requirements may be hard to meet.

To compensate for the mains input voltage influence, the SSL1750 contains a correction circuit. Via pin VINSENSE the average input voltage is measured and the information is fed to an internal compensation circuit. With this compensation it is possible to keep the regulation loop bandwidth constant over the full mains input range, yielding a fast transient response on load steps, while still complying with class-D MHR requirements.

In a typical application, the bandwidth of the regulation loop is set by a resistor and two capacitors on pin PFCCOMP.

### 7.2.5 Soft start-up (pin PFCSENSE)

To prevent audible transformer noise at start-up or during hiccup, the transformer peak current, $I_{DM}$, is increased slowly by the soft-start function. This can be achieved by inserting $R_{SS1}$ and $C_{SS1}$ between pin PFCSENSE and current sense resistor $R_{SENSE1}$. An internal current source charges the capacitor to $V_{PFCSENSE} = I_{start(soft)PFC} \times R_{SS1}$. The voltage is limited to $V_{start(soft)PFC}$.

The start level and the time constant of the increasing primary current level can be adjusted externally by changing the values of $R_{SS1}$ and $C_{SS1}$. See Equation 1.

$$\tau_{SoftStart} = 3 \times R_{SS1} \times C_{SS1} \quad (1)$$

The charging current $I_{start(soft)PFC}$ flows as long as the voltage on pin PFCSENSE is below 0.5 V (typ). If the voltage on pin PFCSENSE exceeds 0.5 V, the soft-start current source starts limiting current $I_{start(soft)PFC}$. As soon as the PFC starts switching, the $I_{start(soft)PFC}$ current source is switched off, see Figure 6.



© NXP B.V. 2008. All rights reserved.

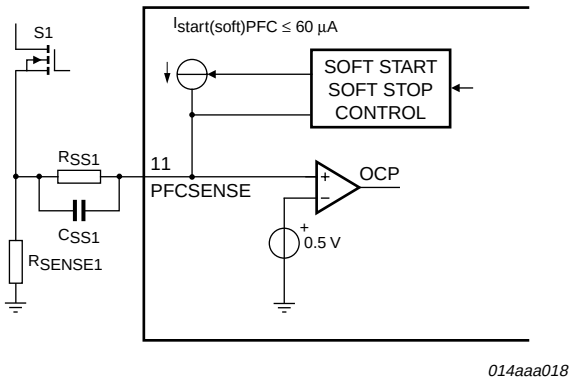


**Fig 6. Soft start-up and soft-stop of PFC**

### 7.2.6 Burst mode control

When the output power of the flyback converter (see Section 7.3) is low, the flyback converter switches over to frequency reduction mode. When frequency reduction mode is entered by the flyback controller, the power factor correction circuit switches to burst mode control.

In burst mode control, switching of the power factor correction circuit is inhibited until the voltage on pin VOSENSE has dropped to $V_{burst(L)}$. Switching then restarts with a soft-start to avoid audible noise (see Section 7.2.5). As soon as the voltage on pin VOSENSE reaches $V_{burst(H)}$ the soft-stop circuit is activated, again to avoid audible noise. During the soft-stop time the output voltage of the power factor correction circuit overshoots, depending on the soft-start resistor and capacitor, $R_{SS1}$ and $C_{SS1}$ on pin PFCSENSE. As the $V_{burst(H)}$ voltage is well below the $V_{reg(VOSENSE)}$ voltage, the PFC output voltage does not reach the normal operation output voltage of the power factor correction circuit in a typical application due to this overshoot.

The burst mode repetition rate is defined by the output power and the value of the bus capacitor, $C_{bus}$.

During burst mode operation pin PFCCOMP is clamped between a voltage of 2.7 V (typ) and 3.9 V (typ). The lower clamp voltage limits the maximum power that is delivered during burst mode operation and yields a more sinusoidal input current during the burst pulse. The upper clamp voltage ensures that the PFC can return to its normal regulation point in a limited amount of time when returning from burst mode.

As soon as the flyback converter leaves frequency reduction mode, the power factor correction circuit restores normal operation. To prevent continuous on and off switching of the PFC circuit, a small hysteresis has been built in (50 mV (typ) on pin FBCTRL).



© NXP B.V. 2008. All rights reserved.

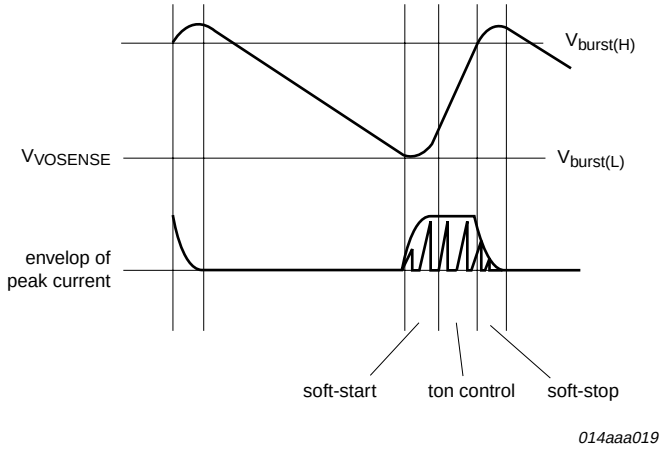


**Fig 7. Burst mode control**

### 7.2.7 Overcurrent protection (pin PFCSENSE)

The maximum peak current is limited cycle-by-cycle by sensing the voltage across an external sense resistor ($R_{SENSE1}$) on the source of the external MOSFET. The voltage is measured via the pin PFCSENSE.

### 7.2.8 Mains undervoltage lockout / brownout protection (pin VINSENSE)

To prevent the PFC from operating at very low mains input voltages, the voltage on pin VINSENSE is sensed continuously. As soon as the voltage on this pin drops below the $V_{stop(VINSENSE)}$ level, switching of the PFC is stopped. If the low mains situation continues, the PFC bus voltage eventually drops. The voltage on pin VOSENSE then drops below the $V_{start(fb)}$ level and the flyback converter is also disabled.

The voltage on pin VINSENSE is clamped to a minimum value, ($V_{start(VINSENSE)} - \Delta V_{pu(VINSENSE)}$, for a fast restart as soon as the mains input voltage is restored after a mains dropout.

### 7.2.9 Overvoltage protection (pin VOSENSE)

An overvoltage protection circuit has been built in to prevent output overvoltage during load steps and mains transients.

As soon as the voltage on pin VOSENSE exceeds the $V_{ovp(VOSENSE)}$ level, switching of the power factor correction circuit is inhibited. Switching of the PFC recommences as soon as the voltage on VOSENSE voltage drops below the $V_{ovp(VOSENSE)}$ level again.

When the resistor between pin VOSENSE and ground is open, the overvoltage protection is also triggered.

### 7.2.10 PFC open loop protection (pin VOSENSE)

The power factor correction circuit does not start switching until the voltage on pin VOSENSE is above the $V_{th(ol)(VOSENSE)}$ level. This protects the circuit from open loop and VOSENSE short situations. As pin VOSENSE draws a small input current, switching is also inhibited when the pin is left open.


© NXP B.V. 2008. All rights reserved.

### 7.2.11 Driver (pin PFCDRIVER)

The driver circuit to the gate of the power MOSFET has a current sourcing capability of typically 500 mA and a current sink capability of typically 1.2 A. This permits fast turn-on and turn-off of the power MOSFET for efficient operation.

## 7.3 Flyback controller

The SSL1750 includes a controller for a flyback converter. The flyback converter operates in quasi-resonant or discontinuous conduction mode with valley switching. The auxiliary winding of the flyback transformer provides demagnetization detection and powers the IC after start-up.

### 7.3.1 Multimode operation

The SSL1750 flyback controller can operate in various modes, see Figure 8.

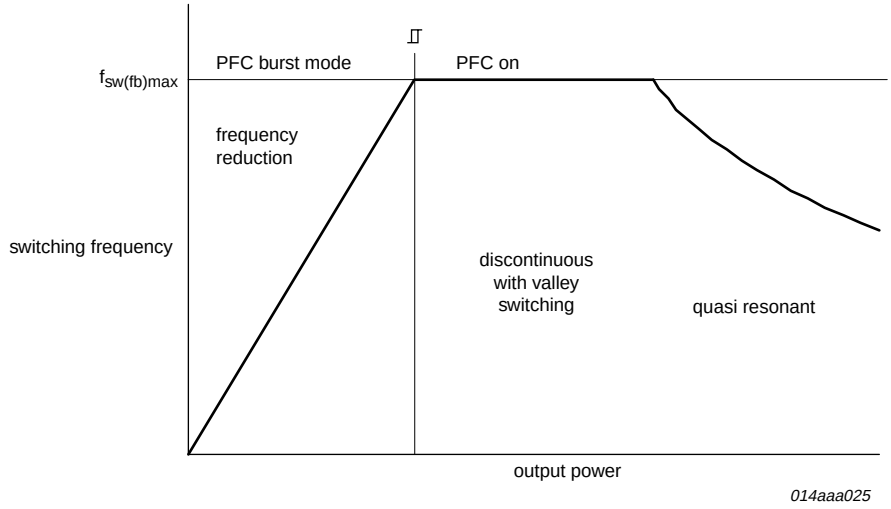


**Fig 8. Multimode operation flyback**

At high output power the converter switches to quasi-resonant mode. The next converter stroke is started after demagnetization of the transformer current. In quasi-resonant mode switching losses are minimized as the converter only switches on when the voltage across the external MOSFET is at its minimum (valley switching, see also Section 7.3.2).

To prevent high frequency operation at lower loads, the quasi-resonant operation changes to discontinuous mode operation with valley skipping in which the switching frequency is limited for EMI to $f_{sw(fb)(max)}$ (125 kHz typ). Again, the external MOSFET is only switched on when the voltage across the MOSFET is at its minimum.

At very low power and standby levels the frequency is controlled down by a Voltage Controlled Oscillator (VCO). The minimum frequency can be reduced to zero. During frequency reduction mode, the primary peak current is kept at a minimal level of Ipkmax/4 to maintain a high efficiency. (Ipkmax is the maximum primary peak current set by the sense resistor and the maximum sense voltage.) As the primary peak current is low in frequency reduction mode operation (Ipk = Ipkmax/4), no audible noise is noticeable at switching frequencies in the audible range. Valley switching is also active in this mode.


© NXP B.V. 2008. All rights reserved.

In frequency reduction mode the PFC controller is switched to burst mode operation and the flyback maximum frequency changes linearly with the control voltage on pin FBCTRL (see Figure 9). For stable on-off switching of the PFC burst mode pin FBCTRL has a 50 mV (typ) hysteresis. At no load operation the switching frequency of the flyback can be reduced to (almost) zero.

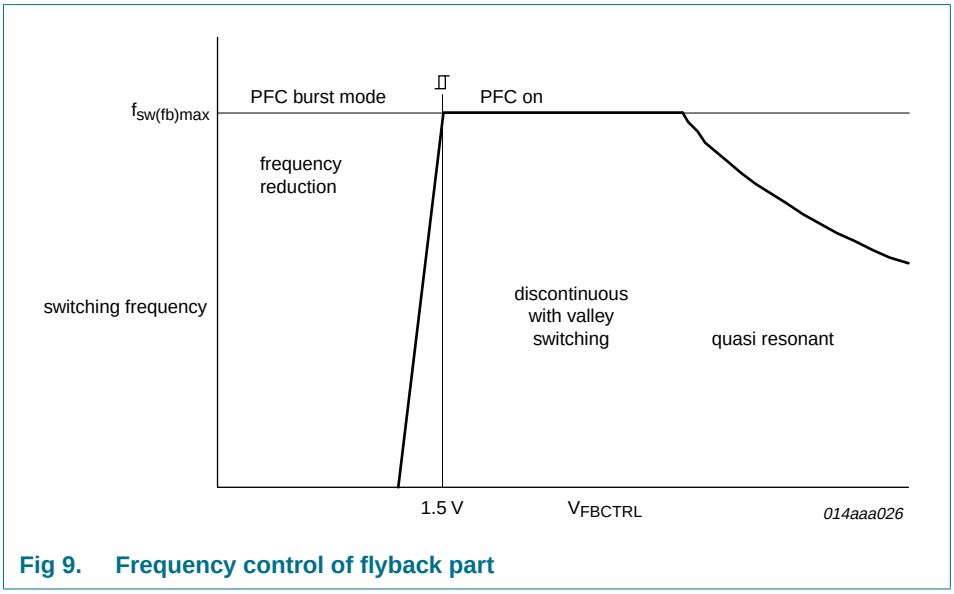


**Fig 9. Frequency control of flyback part**

### 7.3.2 Valley switching (pin HV)

See Figure 10. A new cycle starts when the external MOSFET is activated. After the on-time (determined by the FBSENSE voltage and the FBCTRL voltage), the MOSFET is switched off and the secondary stroke starts. After the secondary stroke, the drain voltage shows an oscillation with a frequency of approximately, see Equation 2

$$\frac{1}{(2 \times \pi \times \sqrt{(L_p \times C_d)})} \tag{2}$$

where $L_p$ is the primary self-inductance of the flyback transformer and $C_d$ is the capacitance on the drain node.

As soon as the internal oscillator voltage is high again and the secondary stroke has ended, the circuit waits for the lowest drain voltage before starting a new primary stroke. Figure 10 shows the drain voltage, valley signal, secondary stroke signal, and the internal oscillator signal.

Valley switching allows high frequency operation as capacitive switching losses are reduced, see Equation 3. High frequency operation makes small and cost-effective magnetics possible.

$$\left(P = \frac{1}{2} \times C_d \times V^2 \times f\right) \tag{3}$$



© NXP B.V. 2008. All rights reserved.

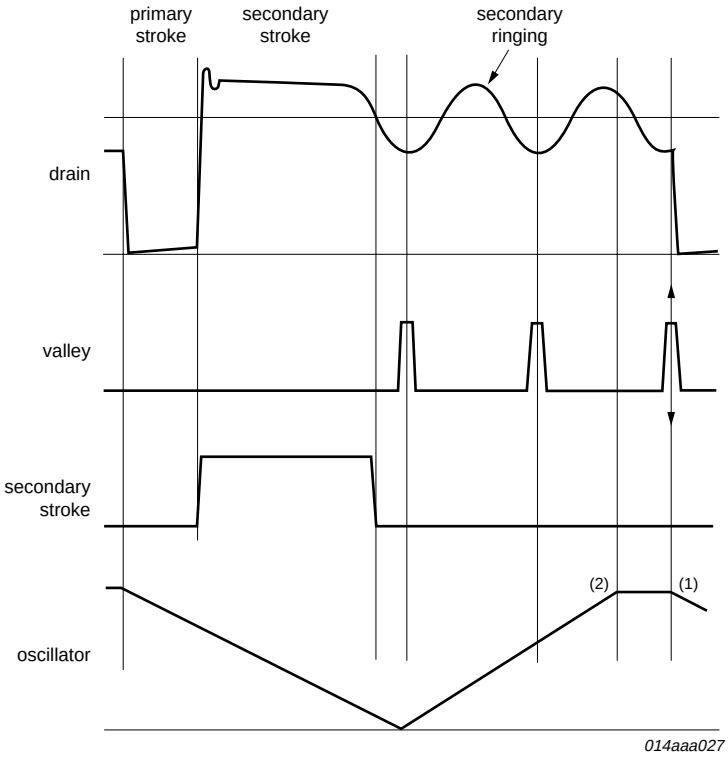


(1) Start of new cycle at lowest drain voltage.

(2) Start of new cycle in a classical Pulse Width Modulation (PWM) system without valley detection.

**Fig 10. Signals for valley switching**

### 7.3.3 Current mode control (pin FBSENSE)

Current mode control is used for the flyback converter for its good line regulation.

The primary current is sensed by pin FBSENSE across an external resistor and compared with an internal control voltage.The internal control voltage is proportional to the voltage on pin FBCTRL.



© NXP B.V. 2008. All rights reserved.

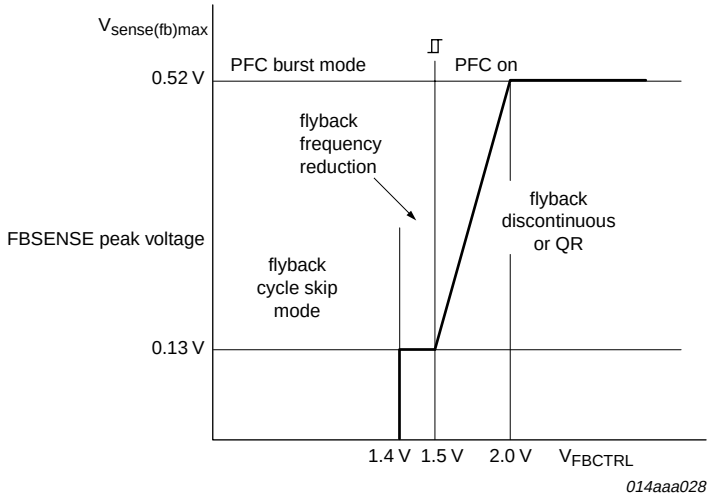


**Fig 11. Frequency control of flyback part**

The driver output is latched in the logic, preventing multiple switch-on.

### 7.3.4 Demagnetization (pin FBAUX)

The system is always in quasi-resonant or discontinuous conduction mode. The internal oscillator does not start a new primary stroke until the previous secondary stroke has ended.

Demagnetization features a cycle-by-cycle output short circuit protection by immediately lowering the frequency (longer off-time), thereby reducing the power level.

Demagnetization recognition is suppressed during the first $t_{sup(xfmr_ring)}$ time (2 µs typ). This suppression may be necessary at low output voltages and at start-up and in applications where the transformer has a large leakage inductance.

If pin FBAUX is open-circuit or not connected, a fault condition is assumed and the converter stops operating immediately. Operation restarts as soon as the fault condition is removed.

### 7.3.5 Flyback control / time-out (pin FBCTRL)

Pin FBCTRL is connected to an internal voltage source of 3.5 V via an internal resistor (typical resistance is 3 kΩ). As soon as the voltage on this pin is above 2.5 V (typ), this connection is disabled. Above 2.5 V the pin is biased with a small current. When the voltage on this pin rises above 4.5 V (typ), a fault is assumed and switching is inhibited.

When a small capacitor is connected to this pin, a time-out function can be created to protect against an open control loop situation (see Figure 12 and Figure 13). The time-out function can be disabled by connecting a resistor (100 kΩ) to ground on pin FBCTRL.

If the pin is shorted to ground, switching of the flyback controller is inhibited.

In normal operating conditions, when the converter is regulating the output, the voltage on pin FBCTRL is between 1.4 V and 2.0 V (typical values) from minimum to maximum output power.


© NXP B.V. 2008. All rights reserved.

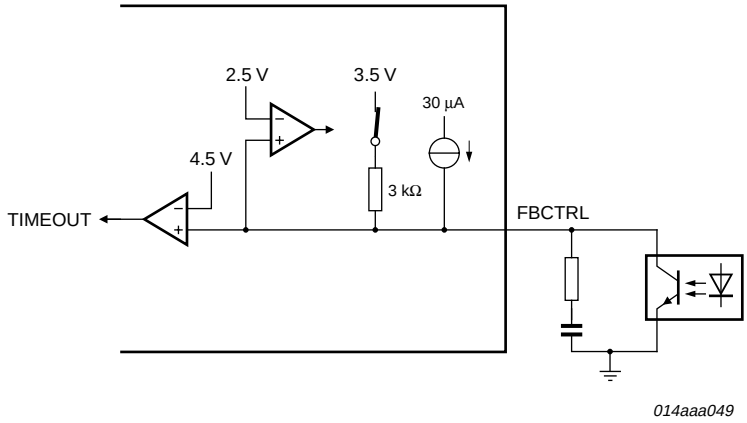


a. Circuit diagram

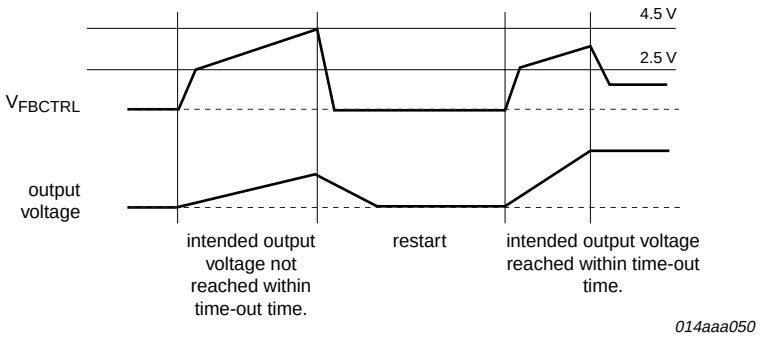


b. Timing diagram

**Fig 12. Time-out protection**

### 7.3.6 Soft start-up (pin FBSENSE)

To prevent audible transformer noise during start-up, the transformer peak current, $I_{DM}$ is slowly increased by the soft-start function. This can be achieved by inserting a resistor and a capacitor between pin FBSENSE and the current sense resistor.

An internal current source charges the capacitor to V = $I_{start(soft)(fb)} \times R_{SS2}$, with a maximum of approximately 0.5 V.

The start level and the time constant of the increasing primary current level can be adjusted externally by changing the values of $R_{SS2}$ and $C_{SS2}$. See Equation 4.

$$\tau_{SoftStart} = 3 \times R_{SS2} \times C_{SS2} \quad (4)$$

The soft start current $I_{start(soft)(fb)}$ is switched on as soon as $V_{CC}$ reaches $V_{startup}$. When the voltage on pin VOSENSE reaches the $V_{start(fb)}$ level and the voltage on pin FBSENSE has reached 0.5 V, the flyback converter starts switching.

The soft-start current flows as long as the voltage on pin FBSENSE is below approximately 0.5 V. If the voltage on pin FBSENSE exceeds 0.5 V, the soft-start current source starts limiting the current. After the flyback converter has started, the soft-start current source is switched off.


© NXP B.V. 2008. All rights reserved.

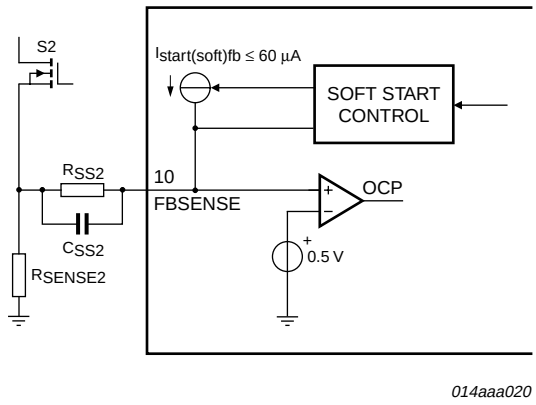


**Fig 13. Soft start-up of flyback**

### 7.3.7 Maximum on-time

The flyback controller limits the 'on-time' of the external MOSFET to 25 µs (typ). When the 'on-time' is longer than 25 µs, the IC stops switching and enters the safe restart mode.

### 7.3.8 Overvoltage protection (pin FBAUX)

An output overvoltage protection is implemented in this IC. This works for the SSL1750 by sensing the auxiliary voltage via the current flowing into pin FBAUX during the secondary stroke. The auxiliary winding voltage is a well-defined replica of the output voltage. Voltage spikes are averaged by an internal filter.

If the output voltage exceeds the OVP trip level, an internal counter starts counting subsequent OVP events. The counter has been added to prevent incorrect OVP detection which might occur during ElectroStatic Discharge (ESD) or lightning events. If the output voltage exceeds the OVP trip level a few times and not again in a subsequent cycle, the internal counter counts down at twice the speed it uses when counting up. However, when typically 8 cycles of subsequent OVP events are detected, the IC assumes a true OVP and the OVP circuit switches the power MOSFET off. As the protection is latched, the converter only restarts after the internal latch is reset. In a typical application the mains should be interrupted to reset the internal latch.

The output voltage $V_{ovp(FBAUX)}$ at which the OVP function trips, can be set by the demagnetization resistor, $R_{FBAUX}$. See Equation 5.

$$V_{o(ovp)} = \frac{N_s}{N_{aux}}(I_{ovp(FBAUX)} \times R_{FBAUX} + V_{clamp(FBAUX)}) \quad (5)$$

where $N_s$ is the number of secondary turns and $N_{aux}$ is the number of auxiliary turns of the transformer. Current $I_{ovp(FBAUX)}$ is internally trimmed.

The value of $R_{FBAUX}$ can be adjusted to the turns ratio of the transformer, thus making an accurate OVP detection possible.


© NXP B.V. 2008. All rights reserved.

### 7.3.9 Overcurrent protection (pin FBSENSE)

The primary peak current in the transformer is measured accurately cycle-by-cycle using the external sense resistor $R_{SENSE2}$. The OCP circuit limits the voltage on pin FBSENSE to an internal level (see also Section 7.3.3). The OCP detection is suppressed during the leading edge blanking period, $t_{leb}$, to prevent false triggering caused by switch-on spikes.

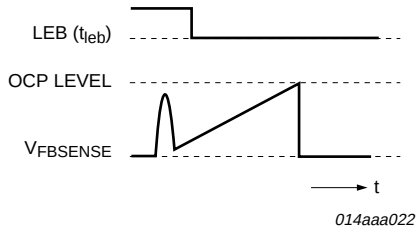


**Fig 14. OCP leading edge blanking**

### 7.3.10 Driver (pin FBDRIVER)

The driver circuit to the gate of the external power MOSFET has a current sourcing capability of typically 500 mA and a current sink capability of typically 1.2 A. This permits fast turn-on and turn-off of the power MOSFET for efficient operation.

## 8. Limiting values

**Table 3. Limiting values**

*In accordance with the Absolute Maximum Rating System (IEC 60134).*

| Symbol | Parameter | Conditions | Min | Max | Unit |
|---|---|---|---|---|---|
| **Voltages** | | | | | |
| $V_{CC}$ | supply voltage | | –0.4 | +38 | V |
| $V_{LATCH}$ | voltage on pin LATCH | current limited | –0.4 | +5 | V |
| $V_{FBCTRL}$ | voltage on pin FBCTRL | | –0.4 | +5 | V |
| $V_{PFCCOMP}$ | voltage on pin PFCCOMP | | –0.4 | +5 | V |
| $V_{VINSENSE}$ | voltage on pin VINSENSE | | –0.4 | +5 | V |
| $V_{VOSENSE}$ | voltage on pin VOSENSE | | –0.4 | +5 | V |
| $V_{PFCAUX}$ | voltage on pin PFCAUX | | –25 | +25 | V |
| $V_{FBSENSE}$ | voltage on pin FBSENSE | current limited | –0.4 | +5 | V |
| $V_{PFCSENSE}$ | voltage on pin PFCSENSE | current limited | –0.4 | +5 | V |
| $V_{HV}$ | voltage on pin HV | | –0.4 | +650 | V |
| **Currents** | | | | | |
| $I_{FBCTRL}$ | current on pin FBCTRL | | –3 | 0 | mA |
| $I_{FBAUX}$ | current on pin FBAUX | | –1 | +1 | mA |
| $I_{PFCSENSE}$ | current on pin PFCSENSE | | –1 | +10 | mA |



© NXP B.V. 2008. All rights reserved.

**Table 3. Limiting values** *…continued*

*In accordance with the Absolute Maximum Rating System (IEC 60134).*

| Symbol | Parameter | Conditions | | Min | Max | Unit |
|---|---|---|---|---|---|---|
| $I_{FBSENSE}$ | current on pin FBSENSE | | | –1 | +10 | mA |
| $I_{FBDRIVER}$ | current on pin FBDRIVER | duty cycle < 10 % | | –0.8 | +2 | A |
| $I_{PFCDRIVER}$ | current on pin PFCDRIVER | duty cycle < 10 % | | –0.8 | +2 | A |
| $I_{HV}$ | current on pin HV | | | - | 5 | mA |
| **General** | | | | | | |
| $P_{tot}$ | total power dissipation | $T_{amb}$ < 75 °C | | - | 0.6 | W |
| $T_{stg}$ | storage temperature | | | –55 | +150 | °C |
| $T_j$ | junction temperature | | | –20 | +150 | °C |
| **ESD** | | | | | | |
| $V_{ESD}$ | electrostatic discharge voltage | class 1 | | | | |
| | | human body model | | | | |
| | | pins 1 to 13 | [1] | - | 2000 | V |
| | | pin 16 (HV) | [1] | - | 1500 | V |
| | | machine model | [2] | - | 200 | V |
| | | charged device model | | - | 500 | V |

[1] Equivalent to discharging a 100 pF capacitor through a 1.5 kΩ series resistor.

[2] Equivalent to discharging a 200 pF capacitor through a 0.75 µH coil and a 10 Ω resistor.

## 9. Thermal characteristics

**Table 4. Thermal characteristics**

| Symbol | Parameter | Conditions | Typ | Unit |
|---|---|---|---|---|
| $R_{th(j-a)}$ | thermal resistance from junction to ambient | in free air; JEDEC test board | 124 | K/W |

## 10. Characteristics

**Table 5. Characteristics**

*Measurement data valid at $T_{amb}$ = 25 °C; $V_{CC}$ = 20 V; all voltages are measured with respect to ground (pin 2); currents are positive when flowing into the IC; unless otherwise specified.*

| Symbol | Parameter | Conditions | Min | Typ | Max | Unit |
|---|---|---|---|---|---|---|
| **Start-up current source (pin HV)** | | | | | | |
| $I_{HV}$ | current on pin HV | $V_{HV}$ > 80 V; | | | | |
| | | $V_{CC}$ < $V_{trip}$; $V_{th(UVLO)}$ < $V_{CC}$ < $V_{startup}$ | - | 1 | - | mA |
| | | $V_{trip}$ < $V_{CC}$ < $V_{th(UVLO)}$ | - | 5.4 | - | mA |
| | | with auxiliary supply | 8 | 20 | 40 | µA |
| $V_{BR}$ | breakdown voltage | | 650 | - | - | V |



© NXP B.V. 2008. All rights reserved.

**Table 5. Characteristics** *...continued*

*Measurement data valid at $T_{amb}$ = 25 °C; $V_{CC}$ = 20 V; all voltages are measured with respect to ground (pin 2); currents are positive when flowing into the IC; unless otherwise specified.*

| Symbol | Parameter | Conditions | Min | Typ | Max | Unit |
|---|---|---|---|---|---|---|
| **Supply voltage management (pin $V_{CC}$)** | | | | | | |
| $V_{trip}$ | trip voltage | | 0.55 | 0.65 | 0.75 | V |
| $V_{startup}$ | start-up voltage | | 21 | 22 | 23 | V |
| $V_{th(UVLO)}$ | undervoltage lockout threshold voltage | | 14 | 15 | 16 | V |
| $V_{start(hys)}$ | hysteresis of start voltage | during start-up phase | - | 300 | - | mV |
| $V_{hys}$ | hysteresis voltage | $V_{startup} - V_{th(UVLO)}$ | 6.3 | 7 | 7.7 | V |
| $I_{ch(low)}$ | low charging current | $V_I$ on pin HV > 80 V; $V_{CC} < V_{trip}$ or $V_{th(UVLO)} < V_{CC} < V_{startup}$ | –1.2 | –1 | –0.8 | mA |
| $I_{ch(high)}$ | high charging current | $V_I$ on pin HV > 80 V; $V_{trip} < V_{CC} < V_{th(UVLO)}$ | –6.3 | –5.4 | –4.6 | mA |
| $I_{CC(oper)}$ | operating supply current | no load on pin FBDRIVER and PFCDRIVER | 2.25 | 3 | 3.75 | mA |
| **Input voltage sensing PFC (pin VINSENSE)** | | | | | | |
| $V_{stop(VINSENSE)}$ | stop voltage on pin VINSENSE | | 0.86 | 0.89 | 0.92 | V |
| $V_{start(VINSENSE)}$ | start voltage on pin VINSENSE | | 1.11 | 1.15 | 1.19 | V |
| $\Delta V_{pu(VINSENSE)}$ | pull-up voltage difference on pin VINSENSE | active after $V_{stop(VINSENSE)}$ is detected | - | –100 | - | mV |
| $I_{pu(VINSENSE)}$ | pull-up current on pin VINSENSE | active after $V_{stop(VINSENSE)}$ is detected | –55 | –47 | –40 | µA |
| $V_{mvc(VINSENSE)max}$ | maximum mains voltage compensation voltage on pin VINSENSE | | 4.0 | - | - | V |
| $V_{flr}$ | fast latch reset voltage | active after $V_{th(UVLO)}$ is detected | - | 0.75 | - | V |
| $V_{flr(hys)}$ | hysteresis of fast latch reset voltage | | - | 0.12 | - | V |
| $I_{I(VINSENSE)}$ | input current on pin VINSENSE | $V_{VINSENSE} > V_{stop(VINSENSE)}$ after $V_{start(VINSENSE)}$ is detected | 5 | 33 | 100 | nA |
| **Loop compensation PFC(pin PFCCOMP)** | | | | | | |
| $g_m$ | transconductance | $V_{VOSENSE}$ to $I_{O(PFCCOMP)}$ | 60 | 80 | 100 | µA/V |
| $I_{O(PFCCOMP)}$ | output current on pin PFCCOMP | $V_{VOSENSE}$ = 3.3 V | 33 | 39 | 45 | µA |
| | | $V_{VOSENSE}$ = 2.0 V | –45 | –39 | –33 | µA |
| $V_{clamp(PFCCOMP)}$ | clamp voltage on pin PFCCOMP | low power mode, PFC in burst mode, lower clamp voltage [1] | 2.5 | 2.7 | 2.9 | V |
| | | upper clamp voltage [1] | - | 3.9 | - | V |
| $V_{ton(PFCCOMP)zero}$ | zero on-time voltage on pin PFCCOMP | | 3.4 | 3.5 | 3.6 | V |
| $V_{ton(PFCCOMP)max}$ | maximum on-time voltage on pin PFCCOMP | | 1.20 | 1.25 | 1.30 | V |



© NXP B.V. 2008. All rights reserved.

**Table 5. Characteristics** *...continued*

*Measurement data valid at $T_{amb}$ = 25 °C; $V_{CC}$ = 20 V; all voltages are measured with respect to ground (pin 2); currents are positive when flowing into the IC; unless otherwise specified.*

| Symbol | Parameter | Conditions | | Min | Typ | Max | Unit |
|---|---|---|---|---|---|---|---|
| **Pulse width modulator PFC** | | | | | | | |
| $t_{on(PFC)}$ | PFC on-time | $V_{VINSENSE}$ = 3.3 V, $V_{PFCCOMP} = V_{ton(max)(PFC)}$ | | 3.6 | 4.5 | 5.0 | µs |
| | | $V_{VINSENSE}$ = 0.9 V, $V_{PFCCOMP} = V_{ton(max)(PFC)}$ | | 30 | 40 | 53 | µs |
| **Output voltage sensing PFC (pin VOSENSE)** | | | | | | | |
| $V_{th(ol)(VOSENSE)}$ | open-loop threshold voltage on pin VOSENSE | | | 0.35 | 0.40 | 0.45 | V |
| $V_{start(fb)}$ | flyback start voltage | | [2] | - | 1.72 | - | V |
| $V_{stop(fb)}$ | flyback stop voltage | | | 1.55 | 1.60 | 1.65 | V |
| $V_{burst(L)}$ | LOW-level burst mode voltage | | | 1.87 | 1.92 | 1.97 | V |
| $V_{burst(H)}$ | HIGH-level burst mode voltage | | | 2.19 | 2.24 | 2.29 | V |
| $V_{reg(VOSENSE)}$ | regulation voltage on pin VOSENSE | $I_{O(PFCCOMP)}$ = 0 A | | 2.475 | 2.500 | 2.525 | V |
| $V_{ovp(VOSENSE)}$ | overvoltage protection voltage on pin VOSENSE | | | 2.60 | 2.63 | 2.67 | V |
| $I_{I(VOSENSE)}$ | input current on pin VOSENSE | $V_{VOSENSE}$ = 2.5 V | | 5 | 45 | 100 | nA |
| **Overcurrent protection PFC (pin PFCSENSE)** | | | | | | | |
| $V_{sense(PFC)max}$ | maximum PFC sense voltage | ΔV/Δt = 50 mV/µs | | 0.49 | 0.52 | 0.55 | V |
| | | ΔV/Δt = 200 mV/µs | | 0.51 | 0.54 | 0.57 | V |
| $t_{leb(PFC)}$ | PFC leading edge blanking time | | | 250 | 310 | 370 | ns |
| $I_{prot(PFCSENSE)}$ | protection current on pin PFCSENSE | | | –50 | - | –5 | nA |
| **Soft start, soft stop PFC (pin PFCSENSE)** | | | | | | | |
| $I_{start(soft)PFC}$ | PFC soft start current | | | –75 | –60 | –45 | µA |
| $V_{start(soft)PFC}$ | PFC soft start voltage | | | 0.46 | 0.50 | 0.54 | V |
| $V_{stop(soft)PFC}$ | PFC soft stop voltage | | | 0.42 | 0.45 | 0.48 | V |
| $R_{start(soft)PFC}$ | PFC soft start resistance | | | 12 | - | - | kΩ |
| **Oscillator PFC** | | | | | | | |
| $f_{sw(PFC)max}$ | maximum PFC switching frequency | | | 100 | 125 | 150 | kHz |
| $t_{off(PFC)min}$ | minimum PFC off-time | | | 1.1 | 1.4 | 1.7 | µs |
| **Valley switching PFC (pin PFCAUX)** | | | | | | | |
| $(\Delta V/\Delta t)_{vrec(PFC)}$ | PFC valley recognition voltage change with time | | | - | - | 1.7 | V/µs |
| $t_{vrec(PFC)}$ | PFC valley recognition time | $V_{PFCAUX}$ = 1 V peak-peak | [3] | - | - | 300 | ns |
| | | demagnetization to ΔV/Δt = 0 | [4] | - | - | 50 | ns |
| $t_{to(vrec)PFC}$ | PFC valley recognition time-out time | | | 3 | 4 | 6 | µs |



© NXP B.V. 2008. All rights reserved.

**Table 5. Characteristics** *...continued*

*Measurement data valid at $T_{amb}$ = 25 °C; $V_{CC}$ = 20 V; all voltages are measured with respect to ground (pin 2); currents are positive when flowing into the IC; unless otherwise specified.*

| Symbol | Parameter | Conditions | Min | Typ | Max | Unit |
|---|---|---|---|---|---|---|
| **Demagnetization management PFC (pin PFCAUX)** | | | | | | |
| $V_{th(comp)PFCAUX}$ | comparator threshold voltage on pin PFCAUX | | –150 | –100 | –50 | mV |
| $t_{to(demag)PFC}$ | PFC demagnetization time-out time | | 40 | 50 | 60 | µs |
| $I_{prot(PFCAUX)}$ | protection current on pin PFCAUX | $V_{PFCAUX}$ = 50 mV | –75 | - | –5 | nA |
| **Driver (pin PFCDRIVER)** | | | | | | |
| $I_{src(PFCDRIVER)}$ | source current on pin PFCDRIVER | $V_{PFCDRIVER}$ = 2 V | - | –0.5 | - | A |
| $I_{sink(PFCDRIVER)}$ | sink current on pin PFCDRIVER | $V_{PFCDRIVER}$ = 2 V | - | 0.7 | - | A |
| | | $V_{PFCDRIVER}$ = 10 V | - | 1.2 | - | A |
| $V_{O(PFCDRIVER)max}$ | maximum output voltage on pin PFCDRIVER | | - | 11 | 12 | V |
| **Overvoltage protection flyback (pin FBAUX)** | | | | | | |
| $I_{ovp(FBAUX)}$ | overvoltage protection current on pin FBAUX | | 279 | 300 | 321 | µA |
| $N_{cy(ovp)}$ | number of overvoltage protection cycles | | 6 | 8 | 12 | |
| **Demagnetization management flyback (pin FBAUX)** | | | | | | |
| $V_{th(comp)FBAUX}$ | comparator threshold voltage on pin FBAUX | | 60 | 80 | 110 | mV |
| $I_{prot(FBAUX)}$ | protection current on pin FBAUX | $V_{FBAUX}$ = 50 mV | –50 | - | –5 | nA |
| $V_{clamp(FBAUX)}$ | clamp voltage on pin FBAUX | $I_{FBAUX}$ = –500 µA | –1.0 | –0.8 | –0.6 | V |
| | | $I_{FBAUX}$ = 500 µA | 0.5 | 0.7 | 0.9 | V |
| $t_{sup(xfmr_ring)}$ | transformer ringing suppression time | | 1.5 | 2 | 2.5 | µs |
| **Pulse width modulator flyback** | | | | | | |
| $t_{on(fb)min}$ | minimum flyback on-time | | - | $t_{leb(fb)}$ | - | ns |
| $t_{on(fb)max}$ | maximum flyback on-time | | 20 | 25 | 30 | µs |
| **Oscillator flyback** | | | | | | |
| $f_{sw(fb)max}$ | maximum flyback switching frequency | | 100 | 125 | 150 | kHz |
| $V_{start(VCO)FBCTRL}$ | VCO start voltage on pin FBCTRL | | 1.3 | 1.5 | 1.7 | V |
| $V_{hys(FBCTRL)}$ | hysteresis voltage on pin FBCTRL | | - | 60 | - | mV |
| $\Delta V_{VCO(FBCTRL)}$ | VCO voltage difference on pin FBCTRL | | - | –0.1 | - | V |



© NXP B.V. 2008. All rights reserved.

**Table 5. Characteristics** *...continued*

*Measurement data valid at $T_{amb}$ = 25 °C; $V_{CC}$ = 20 V; all voltages are measured with respect to ground (pin 2); currents are positive when flowing into the IC; unless otherwise specified.*

| Symbol | Parameter | Conditions | Min | Typ | Max | Unit |
|---|---|---|---|---|---|---|
| **Peak current control flyback (pin FBCTRL)** | | | | | | |
| $V_{FBCTRL}$ | voltage on pin FBCTRL | for maximum flyback peak current | 1.85 | 2.0 | 2.15 | V |
| $V_{to(FBCTRL)}$ | time-out voltage on pin FBCTRL | enable voltage | - | 2.5 | - | V |
| | | trip voltage | 4.2 | 4.5 | 4.8 | V |
| $R_{int(FBCTRL)}$ | internal resistance on pin FBCTRL | | - | 3 | - | kΩ |
| $I_{O(FBCTRL)}$ | output current on pin FBCTRL | $V_{FBCTRL}$ = 0 V | –1.4 | –1.17 | –0.93 | mA |
| | | $V_{FBCTRL}$ = 2 V | –0.6 | –0.5 | –0.4 | mA |
| $I_{to(FBCTRL)}$ | time-out current on pin FBCTRL | $V_{FBCTRL}$ = 2.6 V | –36 | –30 | –24 | µA |
| | | $V_{FBCTRL}$ = 4.1 V | –34.5 | –28.5 | –22.5 | µA |
| **Valley switching flyback (pin HV)** | | | | | | |
| $(\Delta V/\Delta t)_{vrec(fb)}$ | flyback valley recognition voltage change with time | | –75 | - | +75 | V/µs |
| $t_{d(vrec-swon)}$ | valley recognition to switch-on delay time | [5] | - | 150 | - | ns |
| **Soft start flyback (pin FBSENSE)** | | | | | | |
| $I_{start(soft)fb}$ | flyback soft start current | | –75 | –60 | –45 | µA |
| $V_{start(soft)fb}$ | flyback soft start voltage | | 0.43 | 0.49 | 0.54 | V |
| $R_{start(soft)fb}$ | flyback soft start resistance | | 12 | - | - | kΩ |
| **Overcurrent protection flyback (pin FBSENSE)** | | | | | | |
| $V_{sense(fb)max}$ | maximum flyback sense voltage | $\Delta V/\Delta t$ = 50 mV/µs | 0.49 | 0.52 | 0.55 | V |
| | | $\Delta V/\Delta t$ = 200 mV/µs | 0.52 | 0.55 | 0.58 | V |
| $t_{leb(fb)}$ | flyback leading edge blanking time | | 255 | 305 | 355 | ns |
| **Driver (FBDRIVER-pin)** | | | | | | |
| $I_{src(FBDRIVER)}$ | source current on pin FBDRIVER | $V_{FBDRIVER}$ = 2 V | - | –0.5 | - | A |
| $I_{sink(FBDRIVER)}$ | sink current on pin FBDRIVER | $V_{FBDRIVER}$ = 2 V | - | 0.7 | - | A |
| | | $V_{FBDRIVER}$ = 10 V | - | 1.2 | - | A |
| $V_{O(FBDRIVER)(max)}$ | maximum output voltage on pin FBDRIVER | | - | 11 | 12 | V |
| **Latch input (pin LATCH)** | | | | | | |
| $V_{prot(LATCH)}$ | protection voltage on pin LATCH | | 1.23 | 1.25 | 1.27 | V |
| $I_{O(LATCH)}$ | output current on pin LATCH | $V_{prot(LATCH)} < V_{LATCH} < V_{oc(LATCH)}$ | –85 | –80 | –75 | µA |
| $V_{en(LATCH)}$ | enable voltage on pin LATCH | at start-up | 1.30 | 1.35 | 1.40 | V |
| $V_{hys(LATCH)}$ | hysteresis voltage on pin LATCH | $V_{en(LATCH)} - V_{prot(LATCH)}$ | 80 | 100 | 140 | mV |
| $V_{oc(LATCH)}$ | open-circuit voltage on pin LATCH | | - | 2.9 | - | V |



© NXP B.V. 2008. All rights reserved.

**Table 5. Characteristics** *...continued*

*Measurement data valid at $T_{amb}$ = 25 °C; $V_{CC}$ = 20 V; all voltages are measured with respect to ground (pin 2); currents are positive when flowing into the IC; unless otherwise specified.*

| Symbol | Parameter | Conditions | Min | Typ | Max | Unit |
|---|---|---|---|---|---|---|
| **Temperature protection** | | | | | | |
| $T_{pl(IC)}$ | IC protection level temperature | | 130 | 140 | 150 | °C |
| $T_{pl(IC)hys}$ | hysteresis of IC protection level temperature | | - | 10 | - | °C |

[1] For a typical application with a compensation network on pin PFCCOMP, like the example in Figure 3.

[2] Typically 120 mV above $V_{stop(fb)}$.

[3] Minimum required voltage change time for valley recognition on pin PFCAUX.

[4] Minimum required time between demagnetization recognition and $\Delta V/\Delta t$ end.

[5] Guaranteed by design.



© NXP B.V. 2008. All rights reserved.

# 11. Package outline

**SO16: plastic small outline package; 16 leads; body width 3.9 mm** **SOT109-1**

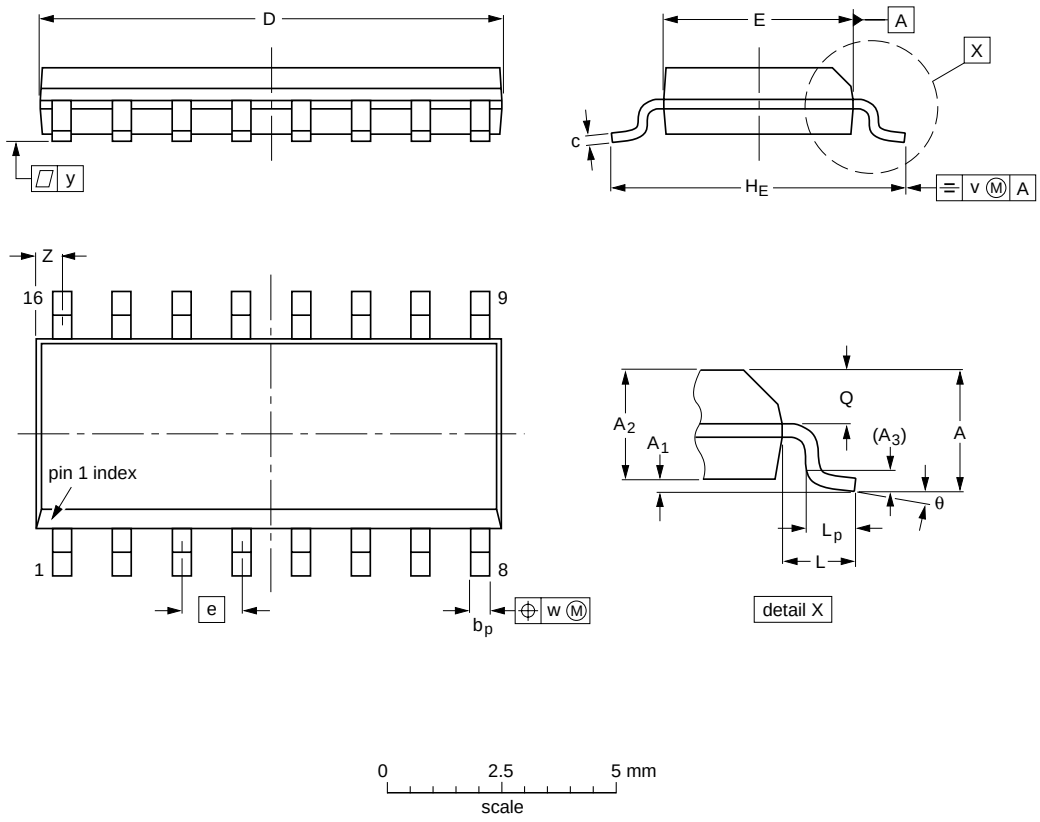


**DIMENSIONS (inch dimensions are derived from the original mm dimensions)**

| UNIT | A max. | $A_1$ | $A_2$ | $A_3$ | $b_p$ | c | $D^{(1)}$ | $E^{(1)}$ | e | $H_E$ | L | $L_p$ | Q | v | w | y | $Z^{(1)}$ | θ |
|---|---|---|---|---|---|---|---|---|---|---|---|---|---|---|---|---|---|---|
| mm | 1.75 | 0.25<br>0.10 | 1.45<br>1.25 | 0.25 | 0.49<br>0.36 | 0.25<br>0.19 | 10.0<br>9.8 | 4.0<br>3.8 | 1.27 | 6.2<br>5.8 | 1.05 | 1.0<br>0.4 | 0.7<br>0.6 | 0.25 | 0.25 | 0.1 | 0.7<br>0.3 | $8^o$<br>$0^o$ |
| inches | 0.069 | 0.010<br>0.004 | 0.057<br>0.049 | 0.01 | 0.019<br>0.014 | 0.0100<br>0.0075 | 0.39<br>0.38 | 0.16<br>0.15 | 0.05 | 0.244<br>0.228 | 0.041 | 0.039<br>0.016 | 0.028<br>0.020 | 0.01 | 0.01 | 0.004 | 0.028<br>0.012 | |

**Note**

1. Plastic or metal protrusions of 0.15 mm (0.006 inch) maximum per side are not included.

| OUTLINE VERSION | REFERENCES | | | | EUROPEAN PROJECTION | ISSUE DATE |
|---|---|---|---|---|---|---|
| | IEC | JEDEC | JEITA | | | |
| SOT109-1 | 076E07 | MS-012 | | | | ~~99-12-27~~<br>03-02-19 |

**Fig 15. Package outline SOT109-1 (SO16)**



© NXP B.V. 2008. All rights reserved.

## 12. Revision history

**Table 6. Revision history**

| Document ID | Release date | Data sheet status | Change notice | Supersedes |
|---|---|---|---|---|
| SSL1750_1 | 20080915 | Product data sheet | - | - |



© NXP B.V. 2008. All rights reserved.

# 13. Legal information

## 13.1 Data sheet status

| Document status[1][2] | Product status[3] | Definition |
|---|---|---|
| Objective [short] data sheet | Development | This document contains data from the objective specification for product development. |
| Preliminary [short] data sheet | Qualification | This document contains data from the preliminary specification. |
| Product [short] data sheet | Production | This document contains the product specification. |

[1] Please consult the most recently issued document before initiating or completing a design.

[2] The term 'short data sheet' is explained in section "Definitions".

[3] The product status of device(s) described in this document may have changed since this document was published and may differ in case of multiple devices. The latest product status information is available on the Internet at URL http://www.nxp.com.

## 13.2 Definitions

**Draft —** The document is a draft version only. The content is still under internal review and subject to formal approval, which may result in modifications or additions. NXP Semiconductors does not give any representations or warranties as to the accuracy or completeness of information included herein and shall have no liability for the consequences of use of such information.

**Short data sheet —** A short data sheet is an extract from a full data sheet with the same product type number(s) and title. A short data sheet is intended for quick reference only and should not be relied upon to contain detailed and full information. For detailed and full information see the relevant full data sheet, which is available on request via the local NXP Semiconductors sales office. In case of any inconsistency or conflict with the short data sheet, the full data sheet shall prevail.

## 13.3 Disclaimers

**General —** Information in this document is believed to be accurate and reliable. However, NXP Semiconductors does not give any representations or warranties, expressed or implied, as to the accuracy or completeness of such information and shall have no liability for the consequences of use of such information.

**Right to make changes —** NXP Semiconductors reserves the right to make changes to information published in this document, including without limitation specifications and product descriptions, at any time and without notice. This document supersedes and replaces all information supplied prior to the publication hereof.

**Suitability for use —** NXP Semiconductors products are not designed, authorized or warranted to be suitable for use in medical, military, aircraft, space or life support equipment, nor in applications where failure or malfunction of an NXP Semiconductors product can reasonably be expected to result in personal injury, death or severe property or environmental damage. NXP Semiconductors accepts no liability for inclusion and/or use of NXP Semiconductors products in such equipment or applications and therefore such inclusion and/or use is at the customer's own risk.

**Applications —** Applications that are described herein for any of these products are for illustrative purposes only. NXP Semiconductors makes no representation or warranty that such applications will be suitable for the specified use without further testing or modification.

**Limiting values —** Stress above one or more limiting values (as defined in the Absolute Maximum Ratings System of IEC 60134) may cause permanent damage to the device. Limiting values are stress ratings only and operation of the device at these or any other conditions above those given in the Characteristics sections of this document is not implied. Exposure to limiting values for extended periods may affect device reliability.

**Terms and conditions of sale —** NXP Semiconductors products are sold subject to the general terms and conditions of commercial sale, as published at http://www.nxp.com/profile/terms, including those pertaining to warranty, intellectual property rights infringement and limitation of liability, unless explicitly otherwise agreed to in writing by NXP Semiconductors. In case of any inconsistency or conflict between information in this document and such terms and conditions, the latter will prevail.

**No offer to sell or license —** Nothing in this document may be interpreted or construed as an offer to sell products that is open for acceptance or the grant, conveyance or implication of any license under any copyrights, patents or other industrial or intellectual property rights.

## 13.4 Trademarks

Notice: All referenced brands, product names, service names and trademarks are the property of their respective owners.

**GreenChip —** is a trademark of NXP B.V.

# 14. Contact information

For more information, please visit: **http://www.nxp.com**

For sales office addresses, please send an email to: **salesaddresses@nxp.com**



© NXP B.V. 2008. All rights reserved.

## 15. Contents


**1 General description . . . . . 1**
**2 Features . . . . . 1**
2.1 Distinctive features . . . . . 1
2.2 Green features . . . . . 1
2.3 PFC green features . . . . . 1
2.4 Flyback green features . . . . . 2
2.5 Protection features . . . . . 2
**3 Applications . . . . . 2**
**4 Ordering information . . . . . 3**
**5 Block diagram . . . . . 3**
**6 Pinning information . . . . . 4**
6.1 Pinning . . . . . 4
6.2 Pin description . . . . . 4
**7 Functional description . . . . . 5**
7.1 General control . . . . . 5
7.1.1 Start-up and undervoltage lockout . . . . . 6
7.1.2 Supply management . . . . . 8
7.1.3 Latch input . . . . . 8
7.1.4 Fast latch reset . . . . . 9
7.1.5 Overtemperature protection (OTP) . . . . . 9
7.2 Power factor correction circuit . . . . . 9
7.2.1 $t_{on}$ control . . . . . 9
7.2.2 Valley switching and demagnetization (pin PFCAUX) . . . . . 9
7.2.3 Frequency limitation . . . . . 10
7.2.4 Mains voltage compensation (pin VINSENSE) . . . . . 10
7.2.5 Soft start-up (pin PFCSENSE) . . . . . 10
7.2.6 Burst mode control . . . . . 11
7.2.7 Overcurrent protection (pin PFCSENSE) . . . . 12
7.2.8 Mains undervoltage lockout / brownout protection (pin VINSENSE) . . . . . 12
7.2.9 Overvoltage protection (pin VOSENSE) . . . . . 12
7.2.10 PFC open loop protection (pin VOSENSE) . . 12
7.2.11 Driver (pin PFCDRIVER) . . . . . 13
7.3 Flyback controller . . . . . 13
7.3.1 Multimode operation . . . . . 13
7.3.2 Valley switching (pin HV) . . . . . 14
7.3.3 Current mode control (pin FBSENSE) . . . . . 15
7.3.4 Demagnetization (pin FBAUX) . . . . . 16
7.3.5 Flyback control / time-out (pin FBCTRL) . . . . 16
7.3.6 Soft start-up (pin FBSENSE) . . . . . 17
7.3.7 Maximum on-time . . . . . 18
7.3.8 Overvoltage protection (pin FBAUX) . . . . . 18
7.3.9 Overcurrent protection (pin FBSENSE) . . . . . 19
7.3.10 Driver (pin FBDRIVER) . . . . . 19
**8 Limiting values . . . . . 19**
**9 Thermal characteristics . . . . . 20**
**10 Characteristics . . . . . 20**
**11 Package outline . . . . . 26**
**12 Revision history . . . . . 27**
**13 Legal information . . . . . 28**
13.1 Data sheet status . . . . . 28
13.2 Definitions . . . . . 28
13.3 Disclaimers . . . . . 28
13.4 Trademarks . . . . . 28
**14 Contact information . . . . . 28**
**15 Contents . . . . . 29**


Please be aware that important notices concerning this document and the product(s) described herein, have been included in section 'Legal information'.

**© NXP B.V. 2008.** **All rights reserved.**

For more information, please visit: http://www.nxp.com
For sales office addresses, please send an email to: salesaddresses@nxp.com

**Date of release: 15 September 2008**
**Document identifier: SSL1750_1**

founded by

PHILIPS