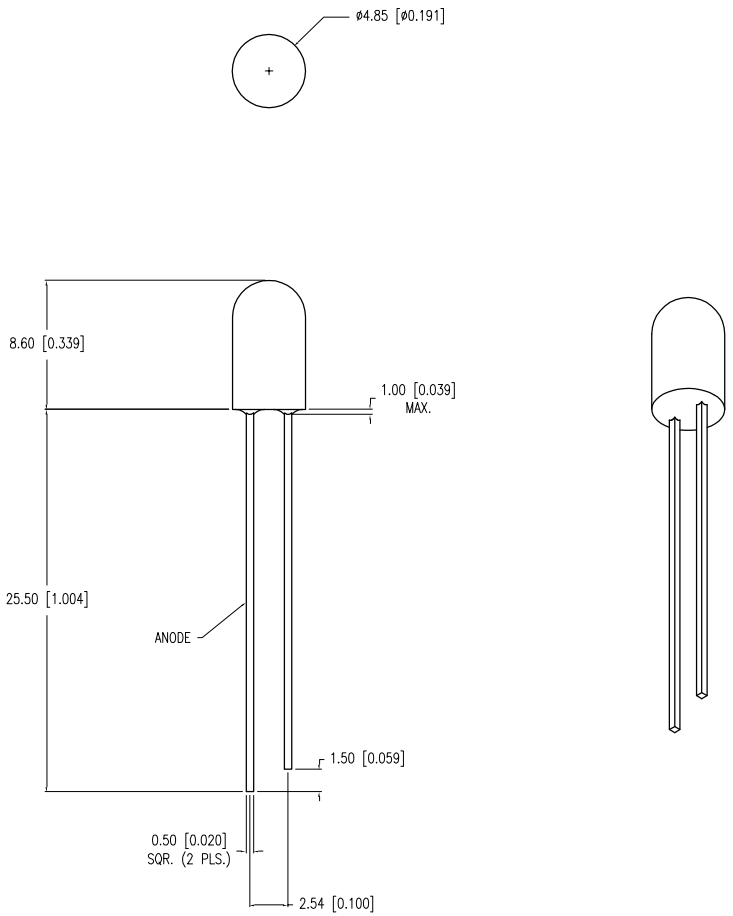

ELECTRO-OPTICAL CHARACTERISTICS T_A=25°C V_f=12V

PARAMETER	MIN	TYP	MAX	UNITS	TEST COND
PEAK WAVELENGTH		585		nm	
FORWARD VOLTAGE		12.0	14.0	V_f	
REVERSE VOLTAGE	5.0			V_r	I_r=100µA
AXIAL INTENSITY		15		mcd	V_f = 12V
VIEWING ANGLE		30		2x theta	
EMITTED COLOR:	YELLOW				
EPOXY LENS FINISH:	YELLOW DIFFUSED				

LIMITS OF SAFE OPERATION AT 25°C

PARAMETER	MAX	UNITS
PEAK FORWARD VOLTAGE*	14	V
STEADY CURRENT	11.5	mA
POWER DISSIPATION	120	mW
DERATE FROM 25°C	- 1.2	mW/°C
OPERATING, STORAGE TEMP.	-40 TO +85	°C
SOLDERING TEMP.	+260	°C
2.0mm FROM BODY	3	SEC. MAX

*UNLESS OTHERWISE SPECIFIED TOLERANCES PER DECIMAL PRECISION ARE: X=±1 (±0.039), X.X=±0.5 (±0.020), X.XX=±0.25 (±0.010), X.XXX=±0.127 (±0.005). LEAD SIZE=±0.05 (±0.002), LEAD LENGTH=±0.75 (±0.030). MIN= $^{+\text{DECIMAL PRECISION}}_{-0.00}$ MAX.= $^{+0.00}_{-\text{DECIMAL PRECISION}}$

UNCONTROLLED DOCUMENT

LUMEX®
Creating LED and LCD Solutions Together™
290 E. HELEN ROAD
PALATINE, IL 60067-6976
PHONE: +1.847.359.2790
FAX: +1.847.359.6538
WEB: WWW.LUMEX.COM

T-5mm (T-1 3/4) 565nm YELLOW LED, YELLOW DIFUSED LENS, 12V OPERATION.

THE SPECIFICATIONS MAY CHANGE AT ANY TIME WITHOUT NOTICE DUE TO NEW MATERIALS OR PRODUCT IMPROVEMENT.

CONFIDENTIAL INFORMATION
THE INFORMATION CONTAINED IN THIS DOCUMENT IS THE PROPERTY OF LUMEX INC. EXCEPT AS SPECIFICALLY AUTHORIZED IN WRITING BY LUMEX INC., THE HOLDER OF THIS DOCUMENT SHALL KEEP ALL INFORMATION CONTAINED HEREIN CONFIDENTIAL AND SHALL PROTECT SAME IN WHOLE OR IN PART FROM DISCLOSURE AND DISSEMINATION TO ALL THIRD PARTIES.

DATE:	04.27.10	DRAWN BY:	JH
PAGE:	1 OF 1	CHKD BY:	SS
SCALE:	N/A	APRVD BY:	KF
UNIT:	mm [INCH]		Pb