UNCONTROLLED DOCUMENT

PART NUMBER	REV.
SSI-LXR5010USBD150	

CAUTION: PRESSURE SENSITIVE ASSEMBLY
AVOID APPLYING PRESSURE TO LED
DURING PANEL ASSEMBLY.

CAUTION: STATIC SENSITIVE DEVICE
FOLLOW PROPER E.S.D. HANDLING PROCEDURES
WHEN WORKING WITH THIS PART.

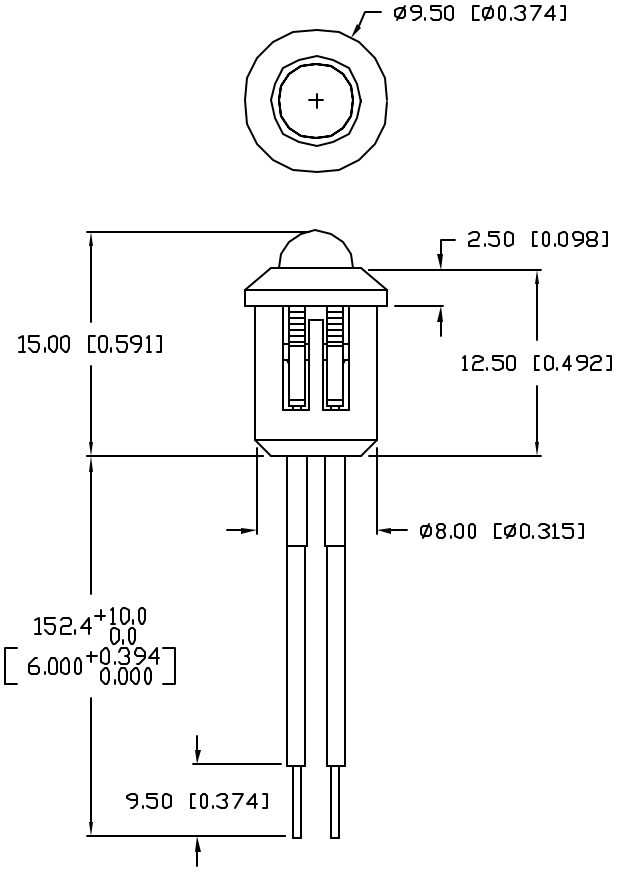

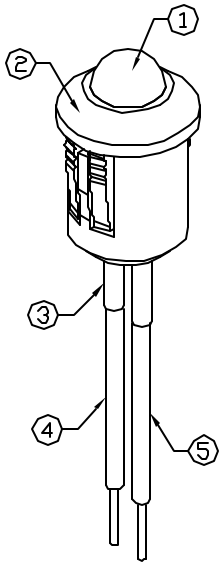

PANEL CUTOUT

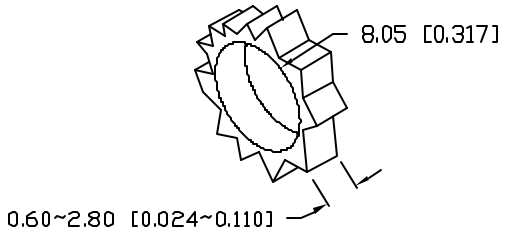

ELECTRO-OPTICAL CHARACTERISTICS T_A=25°C I_f=20mA

PARAMETER	MIN	TYP	MAX	UNITS	TEST COND
PEAK WAVELENGTH		470		nm	
FORWARD VOLTAGE		3.5	4.0	V_f	
REVERSE VOLTAGE	5.0			V_r	I_r=100µA
AXIAL INTENSITY		60		mcd	I_f=20mA
VIEWING ANGLE		60		2x theta	
EMITTED COLOR:	BLUE				
EPOXY LENS FINISH:	BLUE DIFFUSED				

LIMITS OF SAFE OPERATION AT 25°C

PARAMETER	MAX	UNITS
PEAK FORWARD CURRENT*	100	mA
STEADY CURRENT	30	mA
POWER DISSIPATION	105	mW
DERATE FROM 25°C	-1.2	mW/°C
OPERATING, STORAGE TEMP.	-40 TO +85	°C

* t<10µS

NOTES:

1. SSL-LX5093USBD, BLUE LED. TRIM LEADS TO 3-4mm.
2. SSH-RTF5010, BLACK HOLDER.
3. LXP-HEATSHRINK-2, (2 PCS.) 1/16" x 1/2".
4. ANODE LEAD: LXP-WST24RDTOC, CUT 160mm LONG, STRIP ENDS 3mm & 9.5mm.
5. CATHODE LEAD: LXP-WST24BLTOC, CUT 160mm LONG, STRIP ENDS 3mm & 9.5mm.

UNCONTROLLED DOCUMENT

*UNLESS OTHERWISE SPECIFIED TOLERANCES PER DECIMAL PRECISION ARE: X=±1 (±0.039), X.X=±0.5 (±0.020), X.XX=±0.25 (±0.010), X.XXX=±0.127 (±0.005). LEAD SIZE=±0.05 (±0.002), LEAD LENGTH=±0.75 (±0.030). MIN= +DECIMAL PRECISION -0.00 MAX.= +0.00 -DECIMAL PRECISION

REV.	PART NUMBER	CONFIDENTIAL INFORMATION	LUMEX	290 E. HELEN ROAD PALATINE, IL 60067-6976 PHONE: +1.847.359.2790 US WEB: www.lumex.com TW WEB: www.lumex.com.tw
	SSI-LXR5010USBD150	THE INFORMATION CONTAINED IN THIS DOCUMENT IS THE PROPERTY OF LUMEX INC. EXCEPT AS SPECIFICALLY AUTHORIZED IN WRITING BY LUMEX INC., THE HOLDER OF THIS DOCUMENT SHALL KEEP ALL INFORMATION CONTAINED HEREIN CONFIDENTIAL AND SHALL PROTECT SAME IN WHOLE OR IN PART FROM DISCLOSURE AND DISSEMINATION TO ALL THIRD PARTIES.		

T-5mm, 470nm InGaN/SiC BLUE LED PANEL INDICATOR, BLUE DIFFUSED LENS, 6" WIRE LEADS.

RELIABILITY NOTE
OUR MANY YEARS OF EXPERIENCE DATA ACCUMULATION INDICATE THAT SOLDER HEAT IS A MAJOR CAUSE OF EARLY AND FUTURE FAILURE. PLEASE PAY ATTENTION TO YOUR SOLDERING PROCESS.

DRAWN BY:	CHECKED BY:	APPROVED BY:	DATE: 1.5.02 PAGE: 1 OF 1 SCALE: N/A
BC			