SSF7504A

Feathers:

- Advanced trench process technology
- Special designed for Convertors and power controls
- High density cell design for ultra low Rdson
- Fully characterized Avalanche voltage and current
- Avalanche Energy 100% test

Description:

The SSF7504A is a new generation of middle voltage and high current N–Channel enhancement mode trench power MOSFET. This new technology increases the cell density and reduces the on-resistance; its typical Rdson can reduce to 2.7mohm.

Application:

- Power switching application

ID=220A
BV=75V
Rdson=2.7mΩ(typ.)

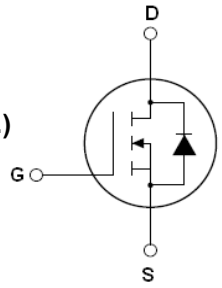



SSF7504A TOP View (TO-263)

Absolute Maximum Ratings

	Parameter	Max.	Units
I_D@T_c=25℃	Continuous drain current,VGS@10V	220	A
I_D@T_c=100℃	Continuous drain current,VGS@10V	170	
I_{DM}	Pulsed drain current ①	880	
P_D@T_C=25℃	Power dissipation	370	W
	Linear derating factor	2.0	W/℃
V_{GS}	Gate-to-Source voltage	±20	V
dv/dt	Peak diode recovery voltage	20	v/ns
E_{AS}	Single pulse avalanche energy ②	960	mJ
E_{AR}	Repetitive avalanche energy	TBD	
T_J T_{STG}	Operating Junction and Storage Temperature Range	–55 to +175	℃

Thermal Resistance

	Parameter	Min.	Typ.	Max.	Units
$R_{\theta JC}$	Junction-to-case	—	0.41	—	℃/W
$R_{\theta JA}$	Junction-to-ambient	—	—	62	

Electrical Characteristics @TJ=25 ℃(unless otherwise specified)

	Parameter	Min.	Typ.	Max.	Units	Test Conditions
BV_{DSS}	Drain-to-Source breakdown voltage	75	—	—	V	V_{GS}=0V,I_D=250μA
$R_{DS(on)}$	Static Drain-to-Source on-resistance	—	2.7	4	mΩ	V_{GS}=10V,I_D=40A
$V_{GS(th)}$	Gate threshold voltage	2.0	3.1	4.0	V	V_{DS}=V_{GS},I_D=250μA
g_{fs}	Forward transconductance	—	65	—	S	V_{DS}=5V,I_D=30A
I_{DSS}	Drain-to-Source leakage current	—	—	10	μA	V_{DS}=80V,V_{GS}=0V
		—	—	50		V_{DS}=80V, V_{GS}=0V,T_J=150℃

I_{GSS}	Gate-to-Source forward leakage	—	—	100	nA	V_{GS}=20V
	Gate-to-Source reverse leakage	—	—	-100		V_{GS}=-20V
Q_g	Total gate charge	—	140	—	nC	I_D=30A
Q_{gs}	Gate-to-Source charge	—	30	—		V_{DD}=30V
Q_{gd}	Gate-to-Drain("Miller") charge	—	36	—		V_{GS}=10V
$t_{d(on)}$	Turn-on delay time	—	22	—	nS	V_{DD}=30V
t_r	Rise time	—	35	—		I_D=2A ,R_L=15Ω
$t_{d(off)}$	Turn-Off delay time	—	77.8	—		R_G=2.5Ω
t_f	Fall time	—	19.8	—		V_{GS}=10V
C_{iss}	Input capacitance	—	7005	—	pF	V_{GS}=0V
C_{oss}	Output capacitance	—	600	—		V_{DS}=25V
C_{rss}	Reverse transfer capacitance	—	280	—		f=1.0MHZ

Source-Drain Ratings and Characteristics

	Parameter	Min.	Typ.	Max.	Units	Test Conditions
I_S	Continuous Source Current (Body Diode)	—	—	220	A	MOSFET symbol showing the integral reverse p-n junction diode. 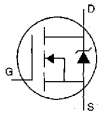
I_{SM}	Pulsed Source Current (Body Diode) ①	—	—	880		
V_{SD}	Diode Forward Voltage	—	—	1.3	V	T_J=25℃,I_S=40A,V_{GS}=0V ③
t_{rr}	Reverse Recovery Time	—	80	—	nS	T_J=25℃,I_F=75A
Q_{rr}	Reverse Recovery Charge	—	270	—	nC	di/dt=100A/μs ③
t_{on}	Forward Turn-on Time	Intrinsic turn-on time is negligible (turn-on is dominated by Ls + LD)				

Notes:

① Repetitive rating; pulse width limited by max junction temperature.

② Test condition: L =0.3mH, ID = 80A, VDD = 37.5V

③ Pulse width≤300μS; duty cycle≤1.5% RG = 25ΩStarting TJ = 25°C

EAS test circuits:

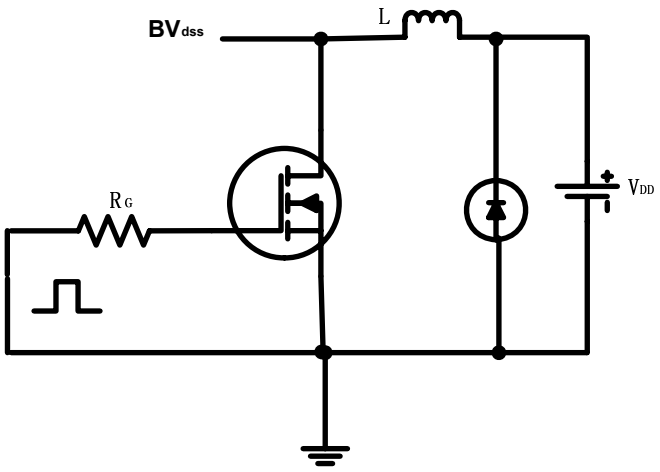

Gate charge test circuit:

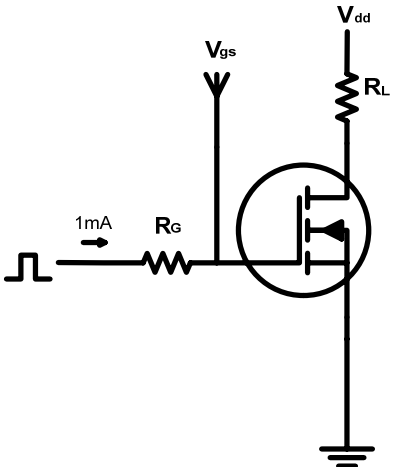

Switch Time Test Circuit:

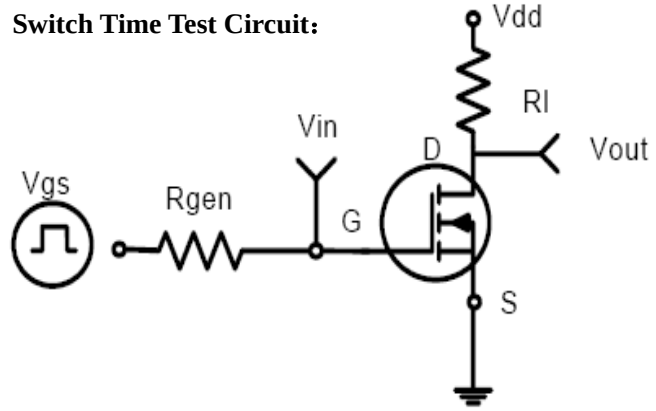

Switch Waveforms:

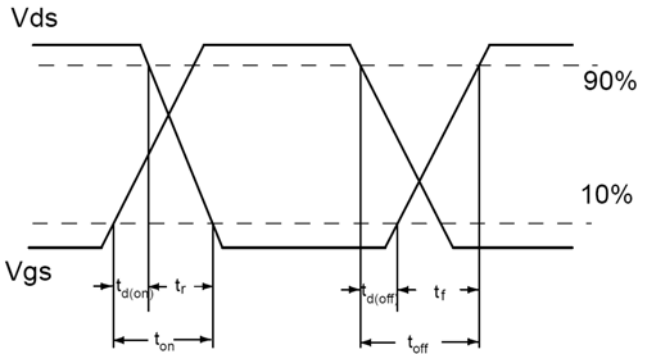

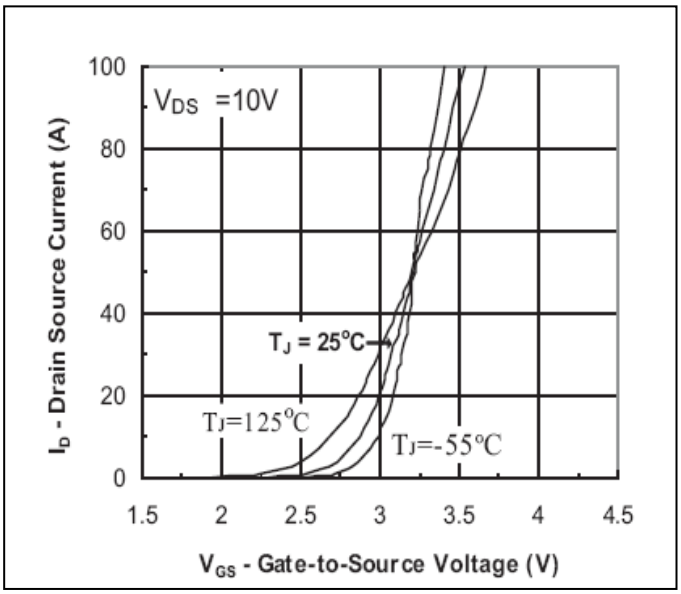

Figure1:Transfer Characteristic

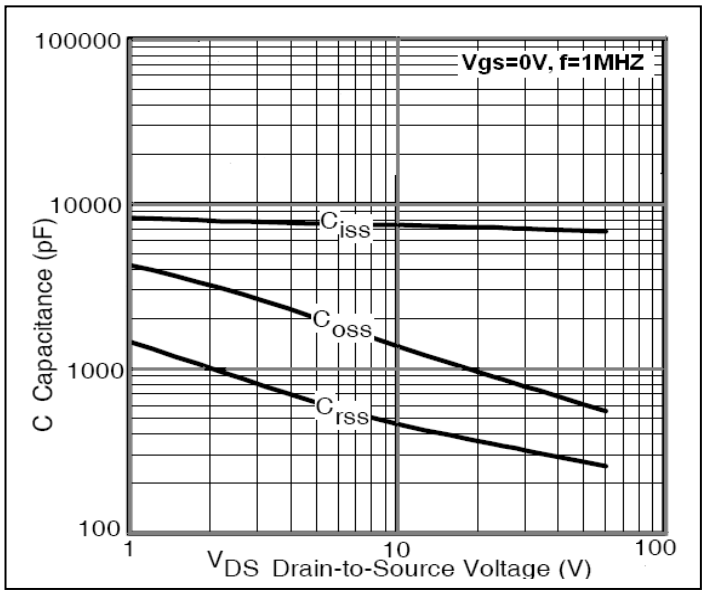

Figure2:Capacitance

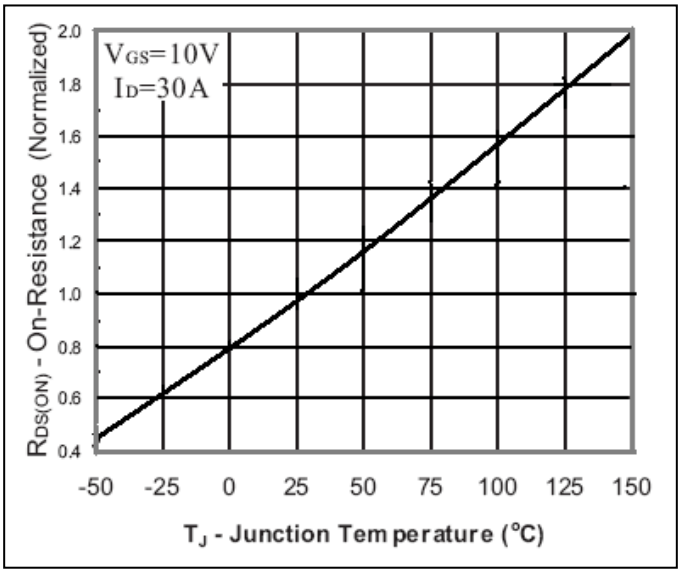

Figure3:On Resistance vs Junction Temperature

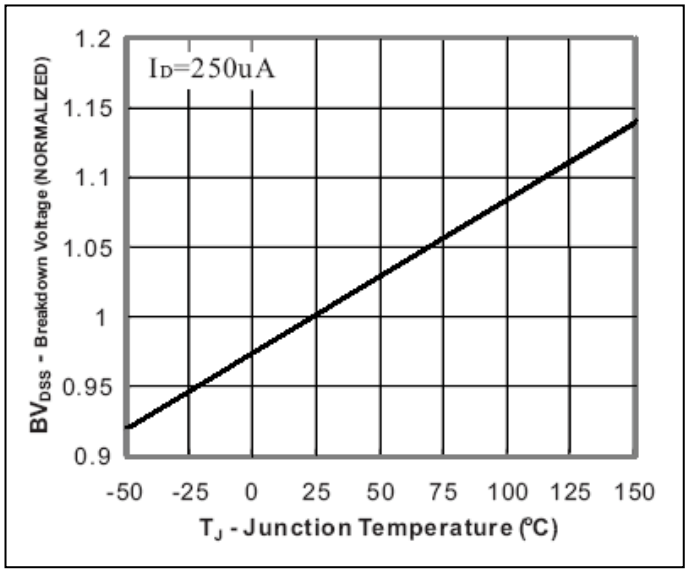

Figure4:Breakdown Voltage vs Junction Temperature

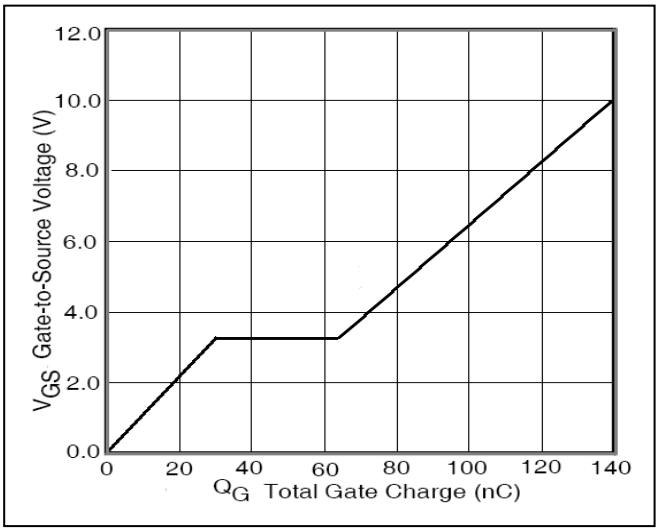

Figure5:Gate Charge

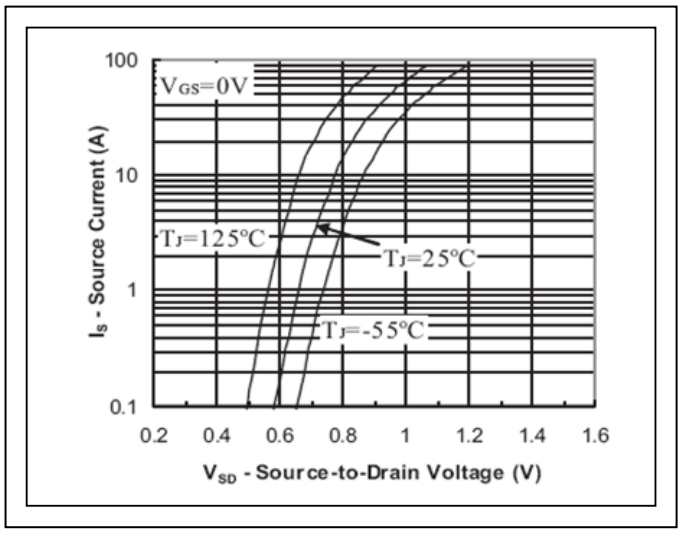

Figure6:Source-Drain Diode Forward Voltage

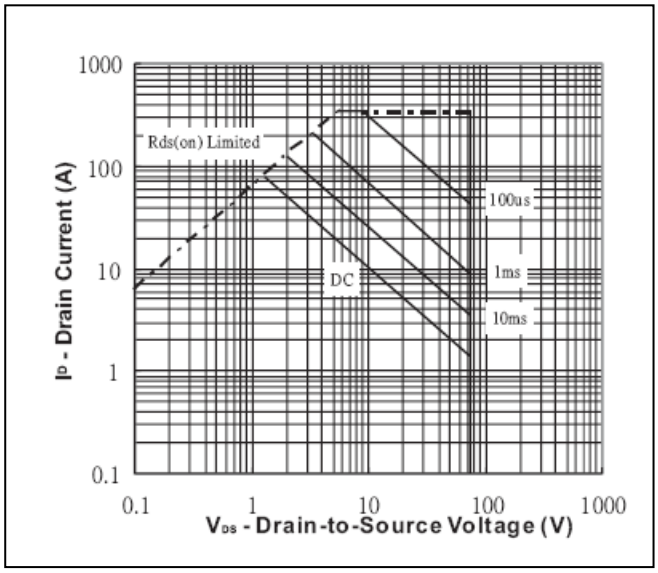

Figure7:Safe Operation Area

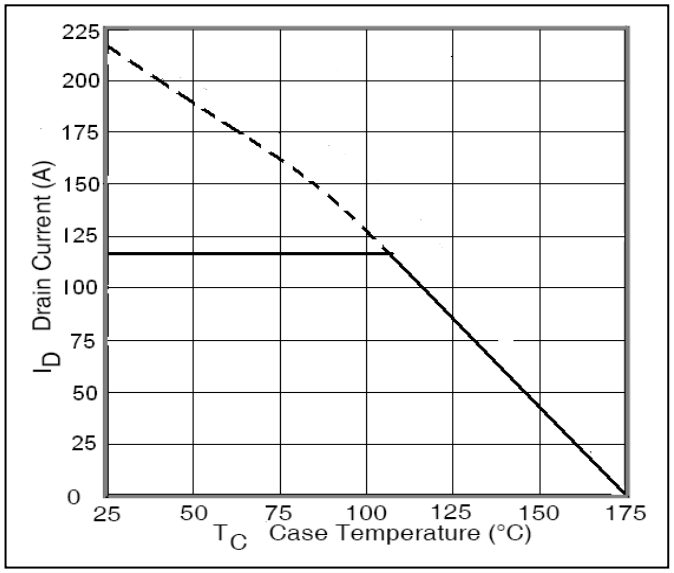

Figure8:Max Drain Current vs Junction Temperature

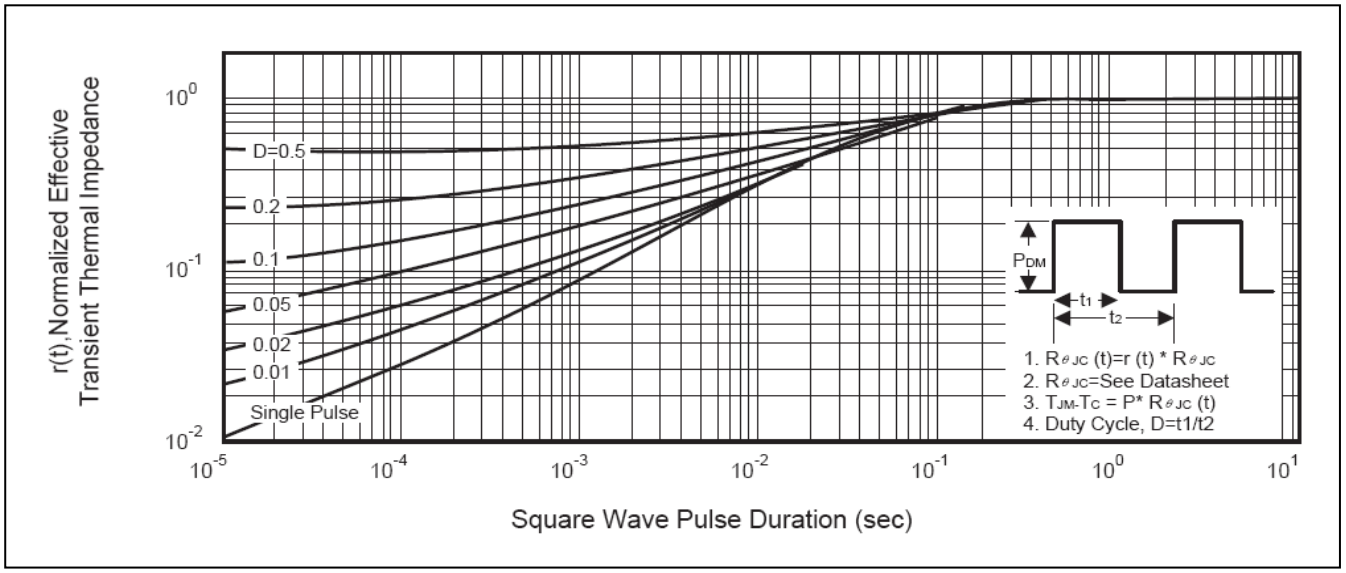

Figure9:Transient Thermal Impedance Curve

TO-263 MECHANICAL DATA:

DIM.	mm.			inch		
	MIN.	TYP	MAX.	MIN.	TYP.	MAX.
A	4.4		4.6	0.173		0.181
A1	2.49		2.69	0.098		0.106
A2	0.03		0.23	0.001		0.009
B	0.7		0.93	0.027		0.036
B2	1.14		1.7	0.044		0.067
C	0.45		0.6	0.017		0.023
C2	1.23		1.36	0.048		0.053
D	8.95		9.35	0.352		0.368
D1		8			0.315	
E	10		10.4	0.393		
E1		8.5			0.334	
G	4.88		5.28	0.192		0.208
L	15		15.85	0.590		0.625
L2	1.27		1.4	0.050		0.055
L3	1.4		1.75	0.055		0.068
M	2.4		3.2	0.094		0.126
R		0.4			0.015	
V2	0º		4º			

