SSF2816E

20V Dual N-Channel MOSFET

Main Product Characteristics

V_{DSS}	20V
R_{DS}(on)	16.5mohm(typ.)
I_D	7A

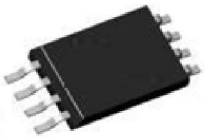

TSSOP-8



Marking and Pin Assignment

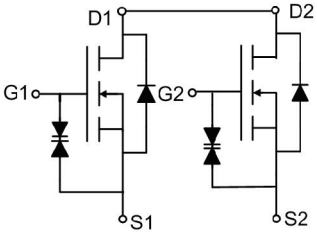

Schematic Diagram

Features and Benefits

- Advanced MOSFET process technology
- Special designed for PWM, load switching and general purpose applications
- Ultra low on-resistance with low gate charge
- Fast switching and reverse body recovery
- 150℃ operating temperature
- 2KV ESD Protected
- Lead free product

Description

It utilizes the latest processing techniques to achieve the high cell density and reduces the on-resistance with high repetitive avalanche rating. These features combine to make this design an extremely efficient and reliable device for use in power switching application and a wide variety of other applications.

Absolute Max Rating

Symbol	Parameter	Max.	Units
I_D @ TC = 25°C	Continuous Drain Current, V_{GS} @ 10V①	7	A
I_{DM}	Pulsed Drain Current②	25	
P_D @TC = 25°C	Power Dissipation③	1.5	W
V_{DS}	Drain-Source Voltage	20	V
V_{GS}	Gate-to-Source Voltage	± 12	V
T_J T_{STG}	Operating Junction and Storage Temperature Range	-55 to +150	°C

Thermal Resistance

Symbol	Characteristics	Typ.	Max.	Units
$R_{\theta JA}$	Junction-to-ambient (t ≤ 10s) ④	—	83	℃/W

Electrical Characteristics @T_A=25℃ unless otherwise specified

Symbol	Parameter	Min.	Typ.	Max.	Units	Conditions
$V_{(BR)DSS}$	Drain-to-Source breakdown voltage	20	—	—	V	V_{GS} = 0V, ID = 250μA
$R_{DS(on)}$	Static Drain-to-Source on-resistance	—	16.5	22	mΩ	V_{GS}=4.5V,I_D = 6.5A
		—	17	23		V_{GS}=4V,I_D = 6A
		—	19	26		V_{GS}=3.1V,I_D = 5.5A
		—	22	30		V_{GS}=2.5V,I_D = 5.5A
$V_{GS(th)}$	Gate threshold voltage	0.6	0.75	1.2	V	V_{DS} = V_{GS}, I_D = 250μA
I_{DSS}	Drain-to-Source leakage current	—	—	1	μA	V_{DS} = 20V,V_{GS} = 0V
I_{GSS}	Gate-to-Source forward leakage	—	—	±200	nA	V_{GS}=±4.5V,V_{DS}=0V
		—	—	±10	uA	V_{GS}=±10V,V_{DS}=0V
g_{FS}	Forward Transconductance	—	6.6	—	S	V_{DS}=10V,I_D=6.5A
Q_g	Total gate charge	—	10	15	nC	V_{DS}=10V,
Q_{gs}	Gate-to-Source charge	—	2.3	—		I_D=7A,
Q_{gd}	Gate-to-Drain("Miller") charge	—	3	—		V_{GS}=4.5V
$t_{d(on)}$	Turn-on delay time	—	10	20	ns	
t_r	Rise time	—	11	25		V_{DD}=10V,I_D=1A
$t_{d(off)}$	Turn-Off delay time	—	35	70		V_{GS}=4.5V,R_{GEN}=6Ω
t_f	Fall time	—	30	60		
C_{iss}	Input capacitance	—	600	—	pF	V_{GS} = 0V
C_{oss}	Output capacitance	—	330	—		V_{DS} = 8V
C_{rss}	Reverse transfer capacitance	—	140	—		f = 1.0MHz

Source-Drain Ratings and Characteristics

Symbol	Parameter	Min.	Typ.	Max.	Units	Conditions
I_S	Continuous Source Current (Body Diode)	—	—	7	A	MOSFET symbol showing the integral reverse p-n junction diode. 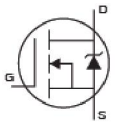
I_{SM}	Pulsed Source Current (Body Diode)	—	—	25	A	
V_{SD}	Diode Forward Voltage	—	0.84	1.2	V	I_S=1.5A, V_{GS}=0V

Test Circuits and Waveforms

EAS test circuits:

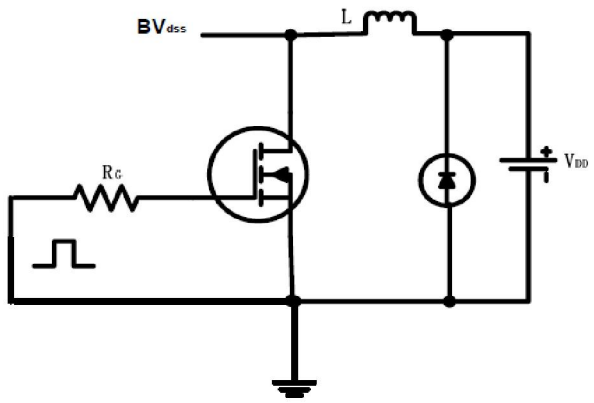

Gate charge test circuit:

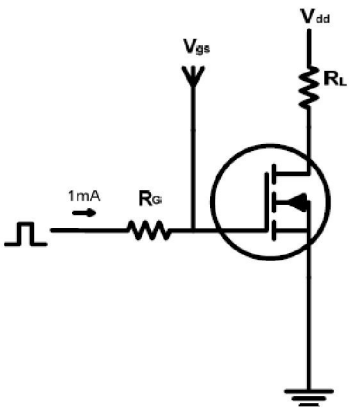

Switch Time Test Circuit:

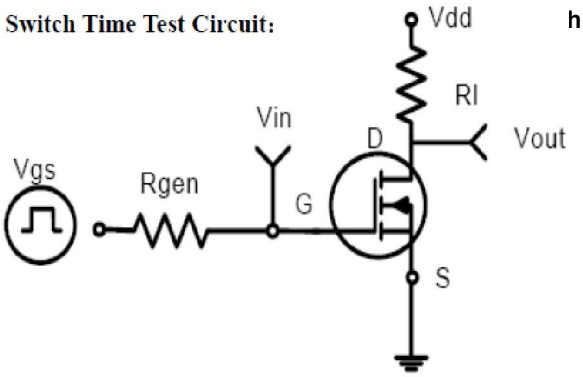

h Waveforms:

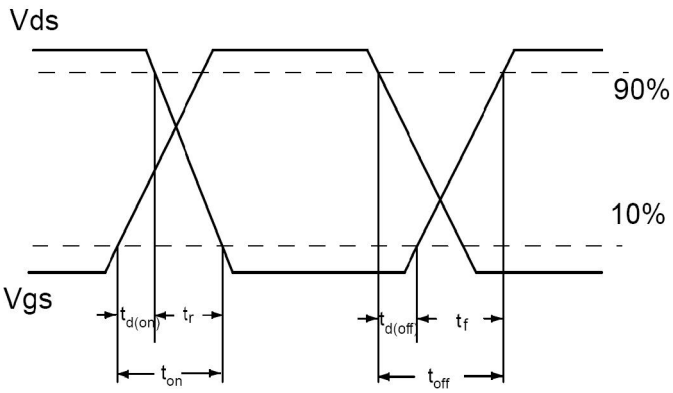

Notes:

①Calculated continuous current based on maximum allowable junction temperature.

②Repetitive rating; pulse width limited by max. junction temperature.

③The power dissipation PD is based on max. junction temperature, using junction-to-case thermal resistance.

④The value of $R_{\theta JA}$ is measured with the device mounted on 1 in 2 FR-4 board with 2oz. Copper, in a still air environment with TA =25°C

Typical Electrical and Thermal Characteristics

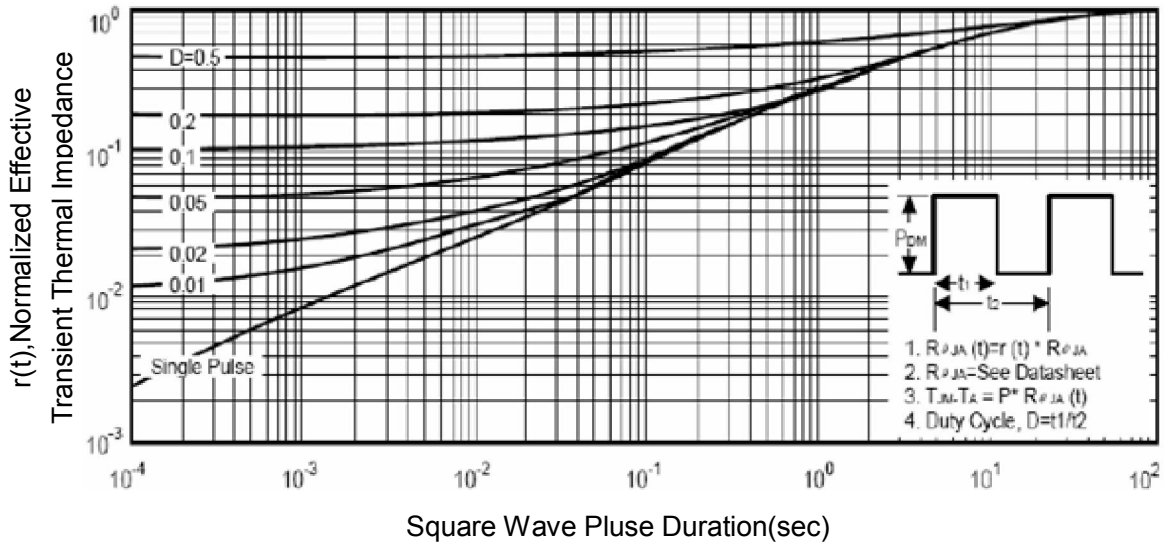

Figure 1 Normalized Maximum Transient Thermal Impedance

Mechanical Data

TSSOP8 PACKAGE OUTLINE DIMENSION

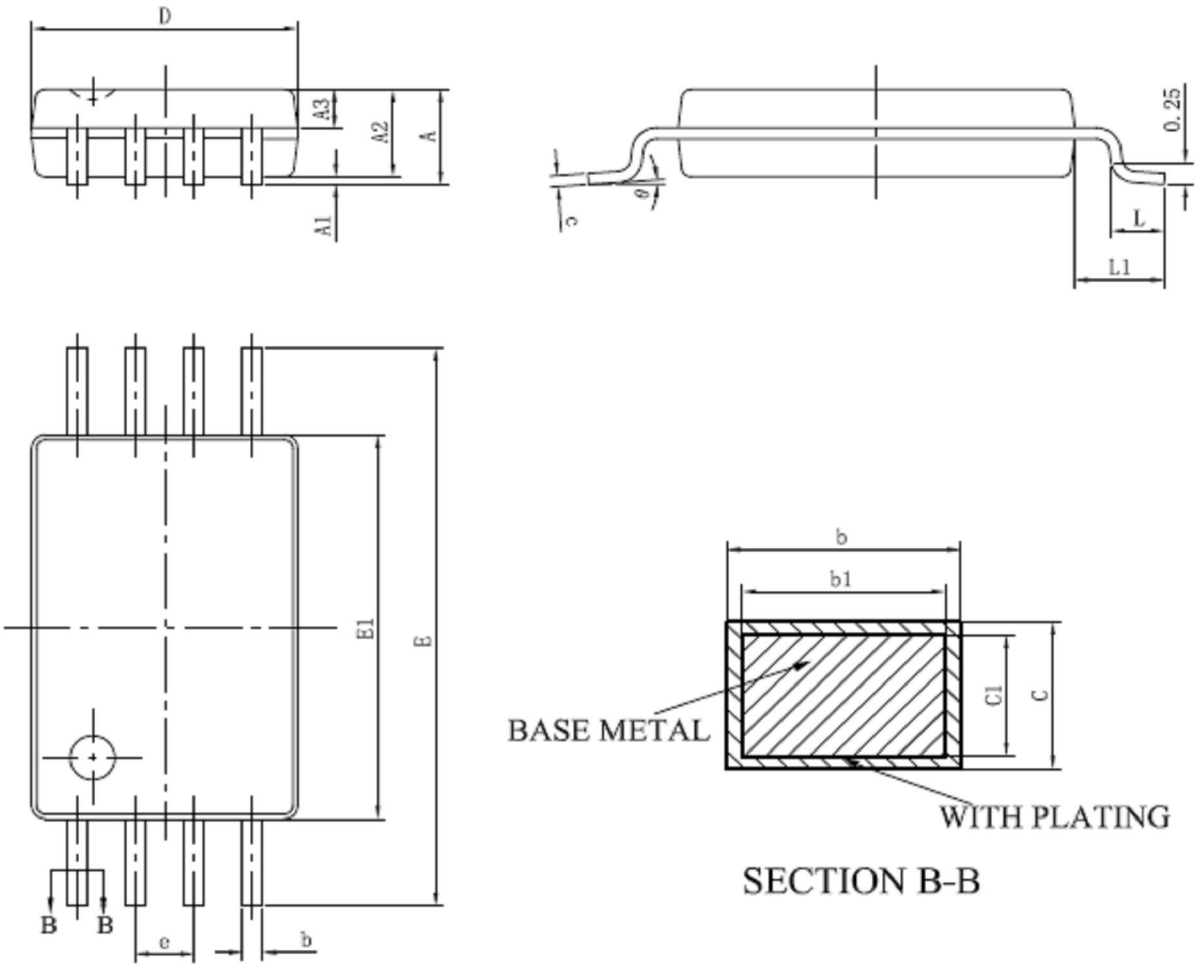

Symbol	Dimension In Millimeters		Dimension In Inches	
	Min	Max	Min	Max
D	2.800	3.200	0.110	0.126
E	6.200	6.600	0.244	0.260
b	0.210	0.280	0.008	0.011
c	0.130	0.190	0.005	0.007
E1	4.200	4.600	0.165	0.181
A	-	1.200	-	0.047
A2	0.850	1.150	0.033	0.045
A1	0.050	0.150	0.002	0.006
e	0.65 (BSC)		0.026 (BSC)	
L	0.450	0.750	0.018	0.030
H	0.25 TYP		0.01 TYP	
θ	1^0	8^0	1^0	8^0

Ordering and Marking Information

Device Marking: SSF2816E

Package (Available)

TSSOP-8

Operating Temperature Range

C : -55 to 150 ºC

Devices per Unit

Package Type	Units/ Tape	Tapes/ Inner Box	Units/ Inner Box	Inner Boxes/ Carton Box	Units/ Carton Box
TSSOP-8	3000	2	6000	8	48000

Reliability Test Program

Test Item	Conditions	Duration	Sample Size
High Temperature Reverse Bias(HTRB)	T_j=125℃ to 150℃ @ 80% of Max V_{DSS}/V_{CES}/VR	168 hours 500 hours 1000 hours	3 lots x 77 devices
High Temperature Gate Bias(HTGB)	T_j=150℃@ 100% of Max V_{GSS}	168 hours 500 hours 1000 hours	3 lots x 77 devices