Magnetic Switch	MRSS29D	Data Sheet
Reference Only	Sensor Products Division	

1. Scope

This data sheet is applied to the magnetic switch MRSS29D

2. Part number

2-1 Part Description Magnetic Switch

2-2 Murata Part Number MRSS29D

3. Dimensions and Schematics

3-1 Dimensions

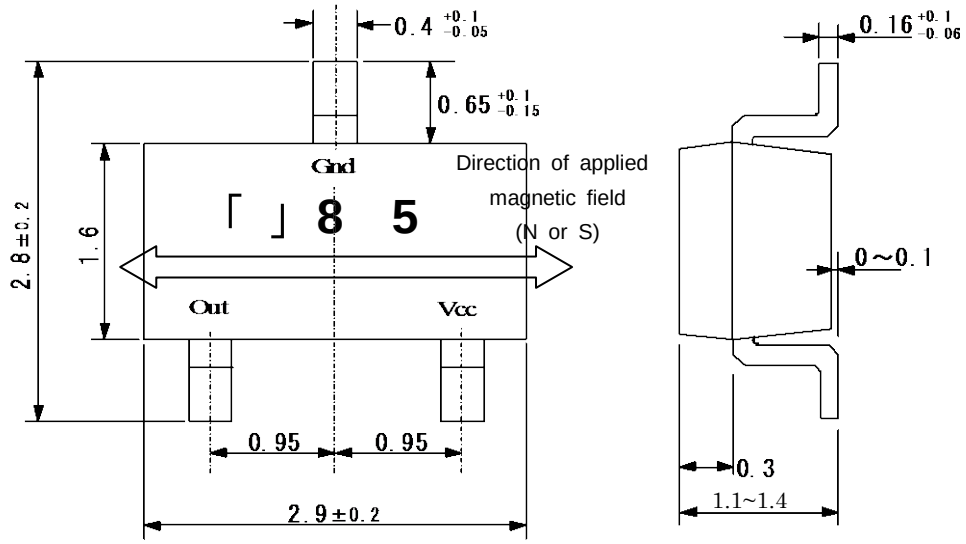

Coplanarity : less than 0.1mm(includiong under reflow condition)

Dimension

(E.g.) 「」8 5 □ . Control code...One alphabetic character

↓ ↓ ↓ □ . Manufactured year...The last digit of the year

□ □ □ □ . Manufactured month..

Jan to Sep : 1 to 9

Oct to Dec : X, Y, Z

Marking Example

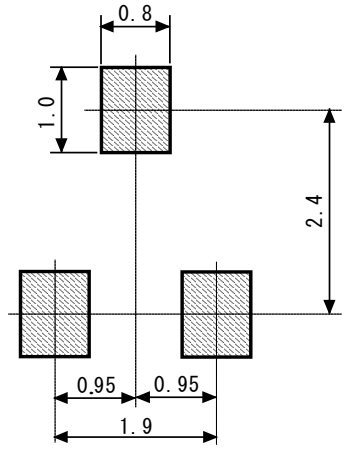

Reference mount pad

3-2 Block wiring diagram

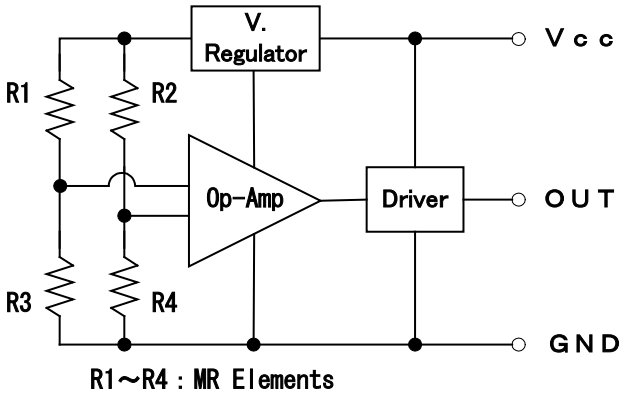

3-3 Magnetic electric conversion characteristic

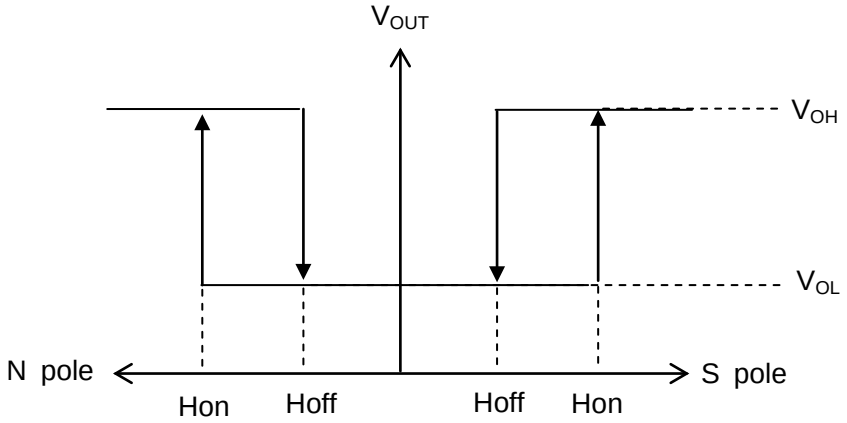

3-4 Timing Diagram

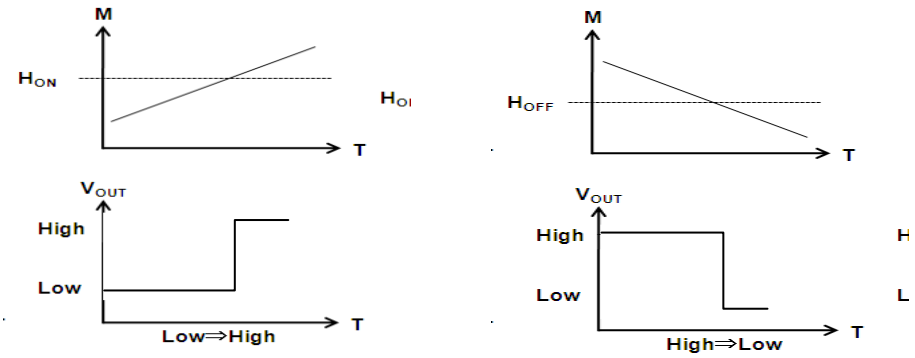

Magnetic Field Applied **Magnetic Field Released**

3-5 Electric Characteristics/ Absolute Maximum Rating (Ta=+25°C Vcc=12V)

	Parameter	Symbol	Conditions	Min.	Typ.	Max.	Unit
1	Supply voltage	V_{cc}	—	3.5	12	30	V
2	Absolute max. supply voltage	—	—	—	—	40	V
3	Current consumption	I_{cc}	—	—	1.0	1.5	mA
	Load Resistance	RL	—	10	—	—	kΩ
4	Operating magnetic field	H_{on}	+25℃	—	1.7	2.5	mT
			-40～+85℃	—	—	3.0	
		H_{off}	+25℃	0.8	1.4	—	
			-40～+85℃	0.5	—	—	
5	Frequency response	—	—	5.0	—	—	kHz
6	Output Voltage	V_{OH}	Vcc=12V R_L=10kΩ	11.4	—	—	V
		V_{OL}	Vcc=12V R_L=10kΩ	—	—	0.3	V
7	Operating temp. range	—	—	-40	—	＋100	°C
8	Storage temp. range	—	—	-40	—	+125	°C

NOTE1) Each specification is defined by testing above items individually.

NOTE2) When shifting the sensor output from L to H, please make sure the magnetic field applied to the sensor becomes higher than the above operating magnetic field (Hon) through your designing.

NOTE3) When shifting the sensor output from H to L, please make sure the magnetic field applied to the sensor becomes lower than the above operating magnetic field (Hoff) through your designing.

NOTE4) Sensitivity selection of this product is performed at Vcc=12V. Operating magnetic field can possibly change when applying the supply voltage other than 12V. Please consult with us for technical assistance when you consider the supply voltage other than 12V, as a special attention needs to be given in the design.

3-6 Packing information

Form of packing	Reel dimension	Pcs per reel
Tape & reel	φ180	3000pcs

3-7 Taping specifications

3-7-1 Taping dimensions

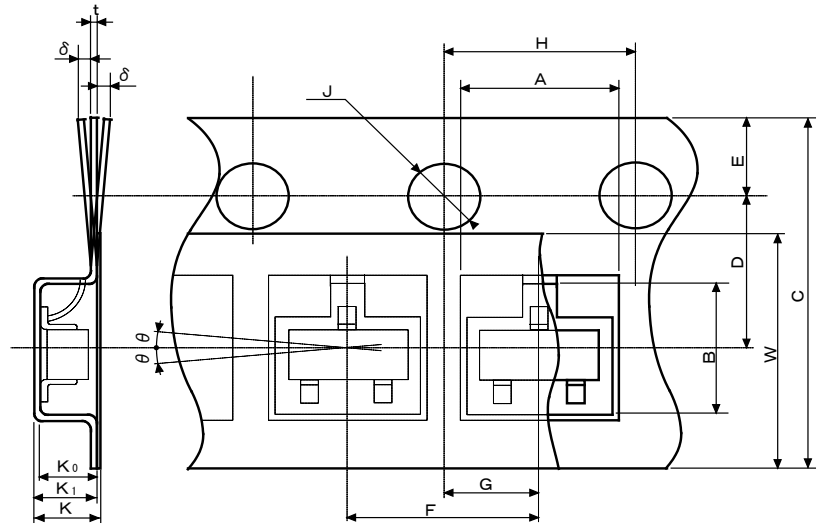

Unit:mm

Parameter		Symbol	Size/ Angle	Parameter		Symbol	Size/ Angle
Pocket	Length	A	3.35±0.1	Dist. Between center lines	L direction	G	2.0±0.05
	Width	B	3.2±0.1		W direction	D	3.5±0.05
	Depth	K_0	1.4±0.1	Cover tape	Width	W	$5.5^{+0.3}_{-0}$
	Pitch	F	4.0±0.1	Carrier tape	Width	C	8.0±0.1
Feed hole	Diameter	J	$\varphi 1.5^{+0.1}_{-0.05}$		Thickness	T	0.2±0.05
	Pitch	H	4.0±0.1		Depth	K_1	1.5±0.1
	Position	E	1.75±0.1	Device	Tilt	θ	30°MAX
Overall thickness		K	1.55±0.1				

3-7-2 Reel dimensions...EIAJ PRV08B compliant

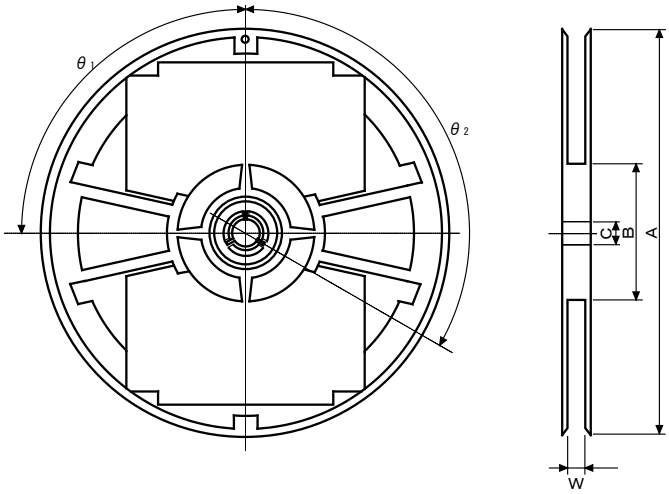

Unit: mm

Item	Symbol	Dim/Angle
Diameter	A	φ178±2
Dis. between flanges	W	9±0.5
Diameter	B	φ60±1
Hub slit position	θ1	90°
Spindle hole diam.	C	φ13±0.5
Key slit position	θ2	120°
Marking	Labeled on one side of flange	

3-7-3 Start/End of taping

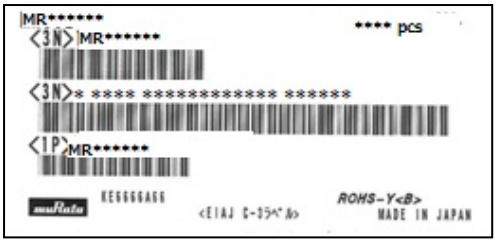

Reel label A (example)

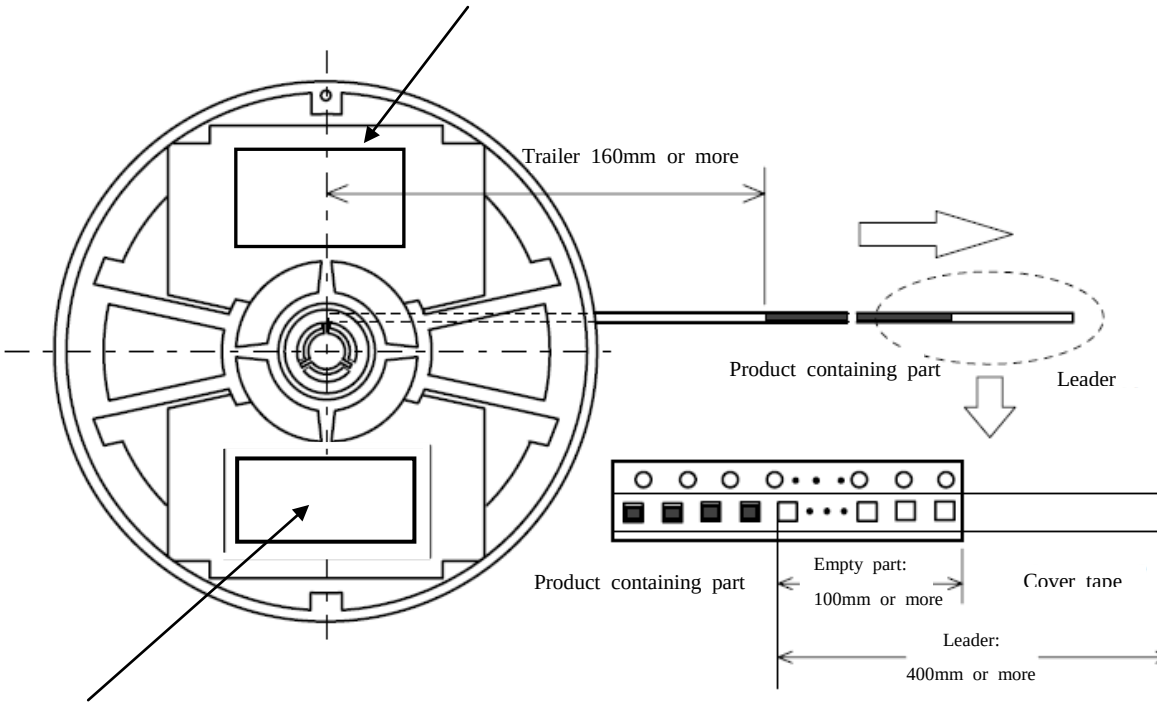

Reel label B (example)



3-7-4 Other notes

Continuously missing device shall not exceed 2 pcs.

Peeling strength of the cover tape: 0.1 to 0.7N.

3.8 Outer packing specifications

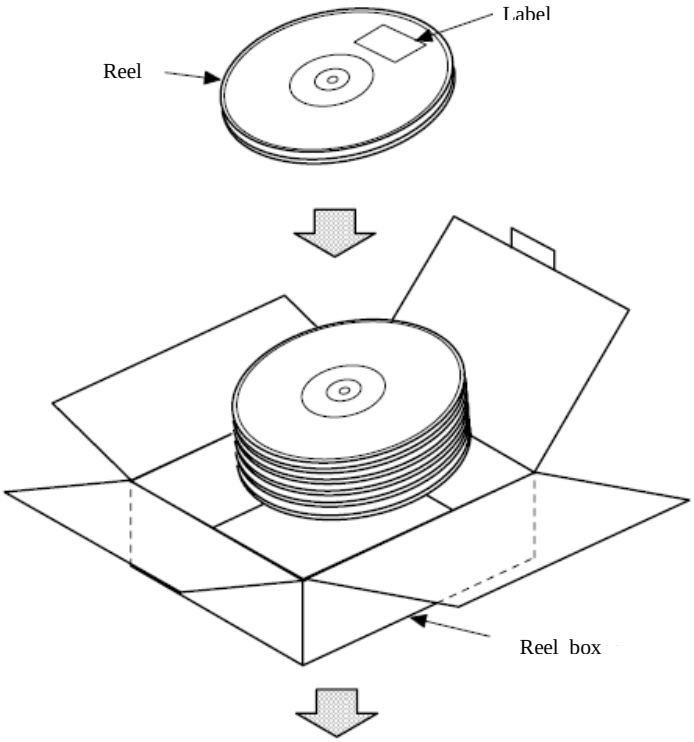

<1 reel or 2 reels>

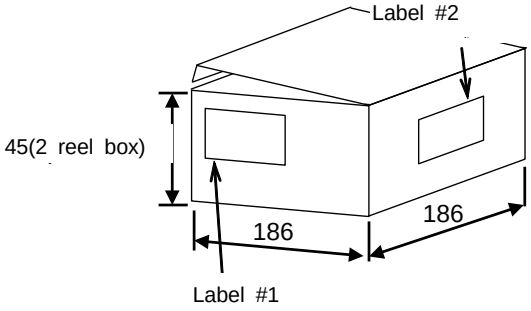

<3 reels and more>

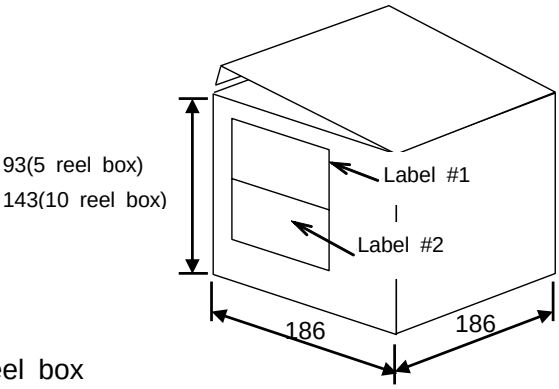

1 to 2 reels: Packed in 2 reel box
3 to 5 reels: Packed in 5 reel box
6 to 10 reels: Packed in 10 reel box
*When the box is not filled with reels, antistatic buffer material will be used to avoid product from moving inside box.
*Unit: mm, Tolerance: +/- 5mm

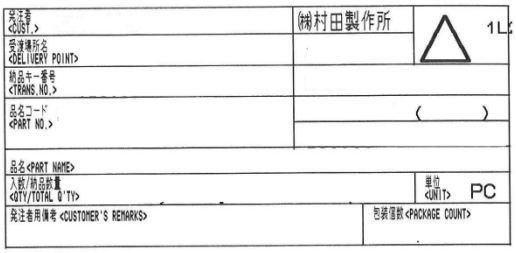

Label #1 (example)



Label #2 (example)

Material

Reel packing box: Cardboard

4. Mounting condition

4-1 Reflow condition, Hand soldering condition

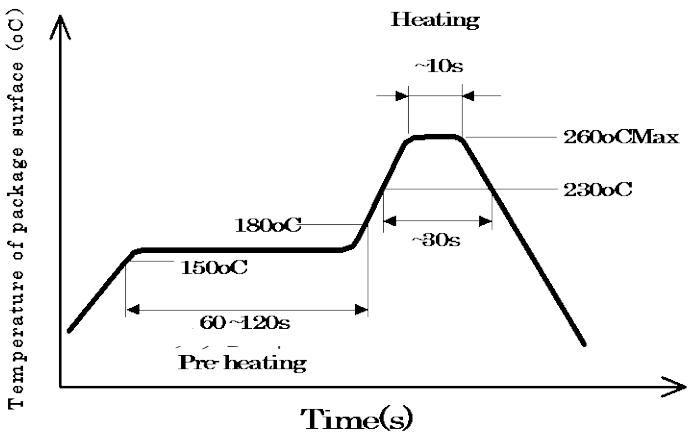

Times of reflow: 3 or less

Hand soldering condition: 350+/-5°C, within 3 sec/each terminal

4-2 Other

MSL(Moisture Sensitivity Level): equal to MSL1

5. Reliability test

No.	Reliability test	Test conditions	Judgment criteria
1	High temp. storage	+125°C 500h No-load	Satisfy the parameter 3, 5 and 6 in 3-5.
2	Low temp. storage	-40 °C 500h No-load	
3	High temp, high humidity load	+85 °C 85%RH 500h Load voltage:30V RL=10kΩ	
4	Vibration	Apply vibration [Max amplitude:1.5mm, frequency: 10 to 55Hz, 1 cycle minute, 3 directions, 2h in each direction (total 6h)]	
5	Thermal shock	-55 °C/30 min⇔+125 °C/30min (vapor phase) 500 cycle, no-load	
6	Solder heat resistance	Pre treatment:+85 °C, 85%RH, 168h Reflow condition: Max. 260 °C & 230 °C, 30 sec, times of reflow: 3	
7	Solderability	Solder temp.:+230 °C, Time: 3 sec immersion	90% and more terminal surface covered with solder
8	Electrostatic resistance	Machine Model Condition:200pF,Resistance:0Ω, +/-200V	Satisfy the parameter 3, 5 and 6 in 3-5.
		Human Body Model Condition:100pF, Resistance: 1.5kΩ, +/-2kV	
9	Electrode sticking tendency	5N(510gf), 4 directions, 10 sec	Satisfy the parameter 3, 5 and 6 in 3-5. No external abnormality found.
10	Drop test	100g dummy load, Height:150cm, on the concrete, 6 sides, 10 times/each	Satisfy the parameter 3, 5 and 6 in 3-5.
11	Shock test	Unpacked condition, X, Y, Z direction, 1470m/s^2, 5 times/each	
12	Bending cycle	Glass epoxy PCB (FR-4), t=1.0, Speed:5mm/min, 90mm span, 1mm bend to + and – side, 1500 cycle	No terminal fracture, loosening found.
13	Bending limit	Glass epoxy PCB (FR-4), t=1.0, 90mm span, bend 7mm to + and –side.	

6. ⚠CAUTION

6-1 Limitation of Applications

Please avoid using this product for the applications listed below which require especially high reliability in order to prevent defects that might directly cause damage to the third party's life, body, or property.

When this product is used for the applications listed below, we shall not be liable for any claims on the product.

① Aircraft equipment
② Aerospace equipment
③ Undersea equipment
④ Generating plant equipment
⑤ Medical equipment
⑥ Transportation equipment (vehicles, trains, ships, etc.)
⑦ Traffic signal equipment
⑧ Disaster prevention/ crime prevention equipment
⑨ Data processing equipment
⑩ Application of similar complexity and/or reliability requirements to the applications listed above.

6-2 FAIL-SAFE

Be sure to provide appropriate fail-safe function on your product to prevent a second damage that may be caused by the abnormal function or the failure of our product.

7. CAUTION FOR USE

7-1 HANDLING

・This product may be degraded by electrostatic discharge. It is necessary to take anti-static precautions when handling.

7-2 DESIGN

・ Please thoughoutly evaluate this product for the magneto-variation of the magnet used along with this product, otherwise this product may result in the miss-operation or the non-operation.

・ Sensor miss-operation or non-operation may occur due to the influence of the magnetic noise from surrounding devices such as motor.Please make sure there is no influence of the magneti noise in designing process.

・ Please be careful about a magnetic body (Iron, Nickel, etc.) and a magnetic noise immunity that may affect the magnetism of a magnet.

Please do not supply inverse voltage or excess voltage to this product. If applied, this product may be damaged and electrically destroyed.

・Please design your product not to be affected by stress of the resin due to heat shrink.

・ It is effective to make the Vcc and GND line wide and short or to adopt multi-layer PCB for switching noise protection. In addition, please place a bypass capacitor near the sensor.

7-3 Storage condition

・ Recommended storage conditions are listed below.

Temperature : +5 to +30°C

Humidity : 70%(RH)% and lower

*Desiccator storage or storage in N_2 atmosphere is recommended.

・Allowable storage time of the product is one year from the date of delivery. Please take account of the storage conditions listed above. Please also use the product as soon as possible after opening the product packing to avoid the deterioration of solderability.

・ Please avoid the water, chemical solvent, or oil.

・Please avoid the corrosive gas (Cl_2 H_2S, NH_3 NO_2, NO_3 etc.)

・ Please avoid the strong vibration or shock.

7-4 Mounting

・ Please mount this product under standard reflow condition. Otherwise this product may be damaged.

・ Please do not apply excessive load to the terminals. Also, please do not bend the terminals.

・ Please do not apply excessive bending stress to the product by bending the PCB or by similar handling as it may change the sensor sensitivity.

8. ⚠NOTE

- Make sure that your product has been evaluated in view of your specifications with our product being mounted to your product.
- Not to use our product deviating from the agreed specification.
- We consider it not appropriate to include any terms and conditions with regard to the business transaction in the product specifications, drawings or other technical documents. Therefore, if your technical documents above include such terms and conditions such as warranty clause, product liability clause, or intellectual property infringement liability clause, they will be deemed to be invalid.