SS0335RCN-151

DATA SHEET

1. SPECIFICATIONS

Absolute Maximum Ratings (Ta=25℃)

Parameter	Symbol	MAX.	Unit
Continuous Forward Current	If	30	mA
Pulse Forward Current*	Ifp	100	mA
Reverse Voltage	Vr	5	V
Power Consumption	Pc	75	mW
Operating Temperature Range	Topr	-40 ~ +85	℃
Storage Temperature Range	Tstg	-40 ~ +100	℃
Electrostatic Discharge	ESD	2000	V
Soldering Temperature	Tsld	Reflow Soldering:240℃/10sec Hand Soldering:350℃/3sec	

*Duty 1/10 @ 1KHZ

Electrical / Optical Characteristics (Ta=25℃)

Parameter	Symbol	Min.	Typ.	Max.	Unit	Test Condition
Forward Voltage*	Vf	1.8	/	2.6	V	If=20mA
Luminous intensity*	Iv	190	350	/	mcd	If=20mA
Dominant Wavelength	λd	/	620	/	nm	If=20mA
Spectrum Radiation Bandwidth	△λ	15	20	25	nm	If=20mA
Reverse Current	Ir	/	/	10	μA	VR=5V
Viewing Angle	$2\theta_{1/2}$	/	110	/	Deg	*

*Forward voltage measurement allowance is ±0.1V.
*Luminous intensity is measured with a light sensor and filter combination that approximates the CIE eye-response curve.
*Luminous Intensity Measurement Allowance is ± 10%.
*Dominant Wavelength measurement allowance is ±1nm
*$2\theta_{1/2}$ is the off-axis angle at which the luminous intensity is half the axial luminous intensity.
*Please see attachments for BIN classifications.

Bin Code List:

Bin Range of Color

Condition : If=20mA	Unit : nm	
Bin Code	Min	Max
121	620	622
122	622	624
123	624	626
124	626	628
125	628	630

Dominant Wavelength measurement allowance is ±1nm.

Bin Range of Luminous Intensity

Condition : If=20mA		Unit : mcd	
Bin Code		Min	Max
	P14	190	230
	P15	230	280
	P16	280	350
	P17	350	430
P18	H01	430	480
	H02	480	530
	H03	530	590

Luminous Intensity measurement Allowance is ± 10%.

Bin Range of Forward Voltage

Condition : If=20mA		Unit : v		
Bin Code		Min	Max	Bin Code
	B2	1.8	1.9	TB
VC	C1	1.9	2.0	
	C2	2.0	2.1	TC
VD	D1	2.1	2.2	
	D2	2.2	2.3	TD
VE	E1	2.3	2.4	
	E2	2.4	2.5	TE
	F1	2.5	2.6	

Forward Voltage measurement allowance is ±0.1V.

Typical Electrical / Optical Characteristics Curves

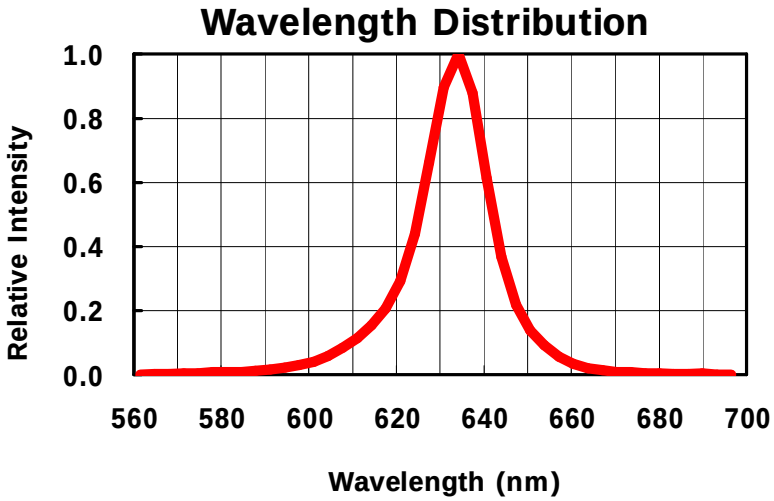

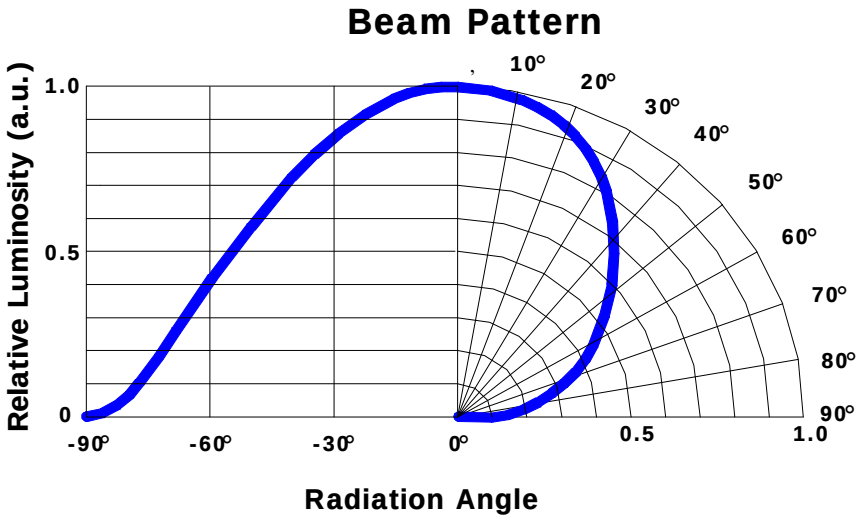

2. Package

Outline Dimension (unit= mm)

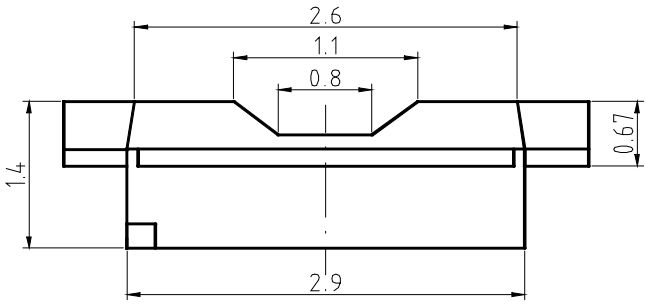

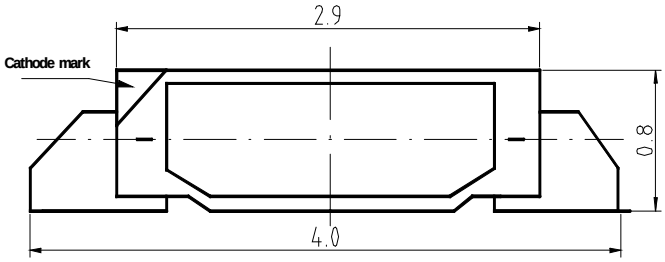

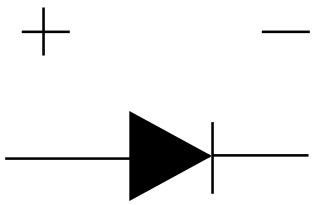

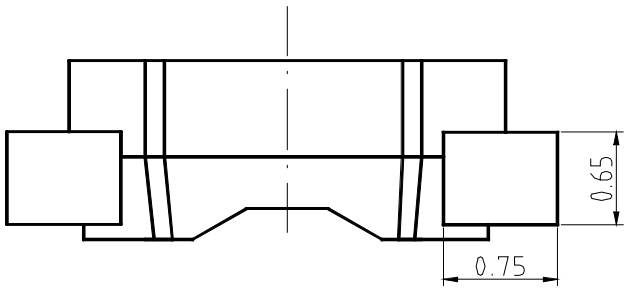

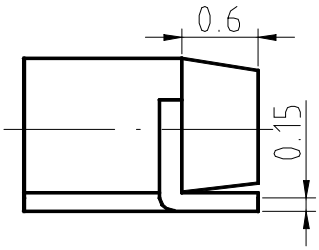

1. All dimensions are in millimeters.
2. Tolerances are ±0.1 mm, unless otherwise noted.

Taping Dimension (unit= mm)

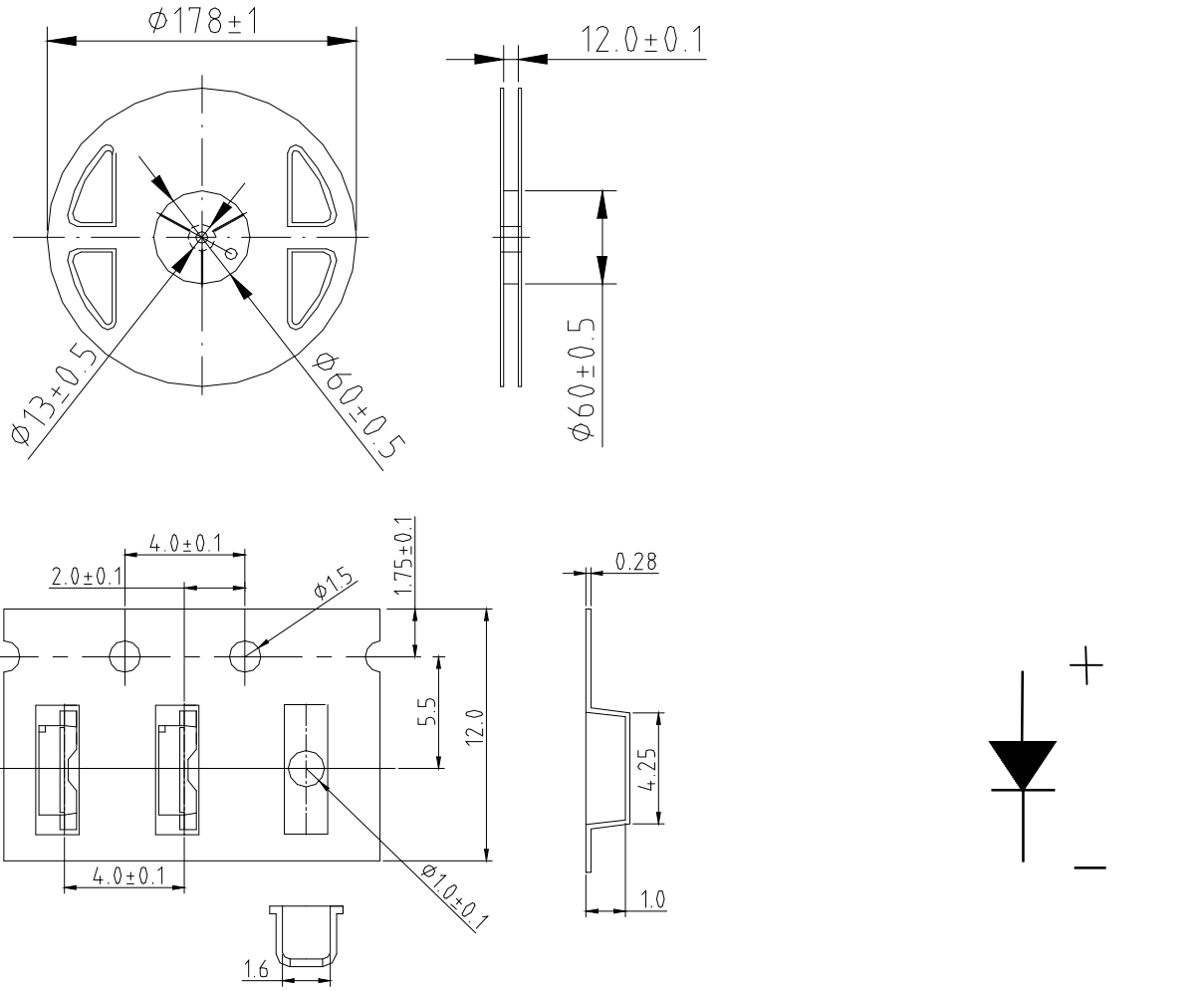

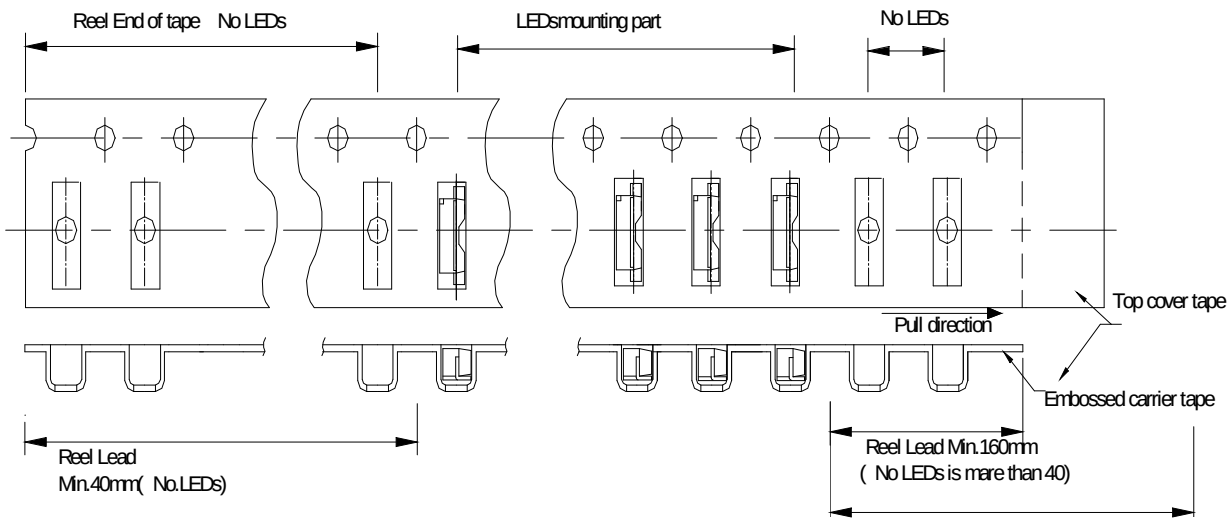

Tolerance: ±0.2 (unit= mm)

Quantity: 3000 pcs/Reel

3. Handling Precaution

1. Recommended soldering conditions

1.1 Reflow solder temperature profile

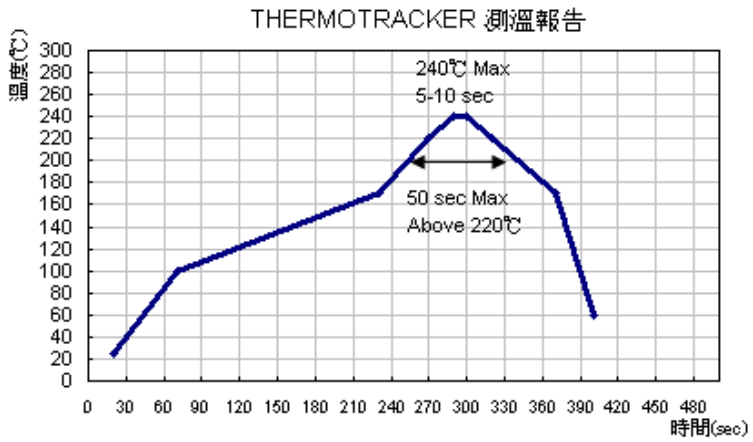

1.2 Recommended Soldering pad design (unit= mm)

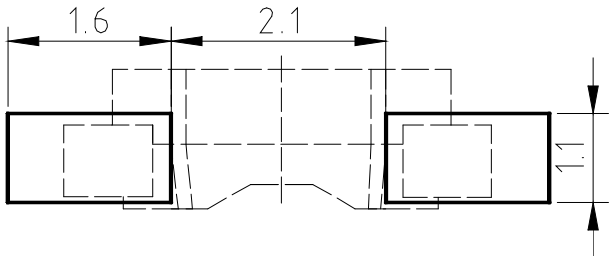

1.3 Soldering conditions

- Reflow soldering should not be done more than twice.
- When soldering, do not stress on LEDs during heating.
- After soldering, do not warp the circuit board.

Repairing

- Repair should not be done after the LEDs have been soldered. When repair is unavoidable, double-head soldering iron should be used. It should be confirmed beforehand whether the characteristics of the LEDs will be damaged by repair or not.

Cleaning

- It is recommended to use isopropyl alcohol as a solvent to clean the LEDs. When using other solvents, it should be confirmed beforehand whether the solvents will dissolve the package and the resin or not.

Advice on Device Usage

- It is recommended that user should complete the use of the whole package within 8 hours upon unsealing. In the event of incomplete usage, it is advised that user preheat the remaining devices at 60℃ for 8 hours prior to use.