Category 6a Cable Splicer

Stewart Connector's Category 6a tool-less cable splicer is designed to create easy connections between patch cables and installation cables for consolidation point applications or for end-to-end links. The Category 6a tool-less cable splicer allows for this direct connection without the need of RJ45 couplers or connectors on both ends.





Features

- Option of either T568A or T568B wiring configuration
- Terminations to solid or stranded wire
- Zinc-Alloy fully shielded
- Individually packaged with termination instructions
- Includes strain relief and mounting bracket to attach to walls or ceilings

Benefits

- Compatible with Category 6a hardware
- No termination tooling required
- Compliant with ANSI/TIA-568.2-D and ISO/IEC 11801

Part Numbers

Part Number	Shielding	AWG Wire Accepted
SS-82120-002	Shielded	22-26 AWG

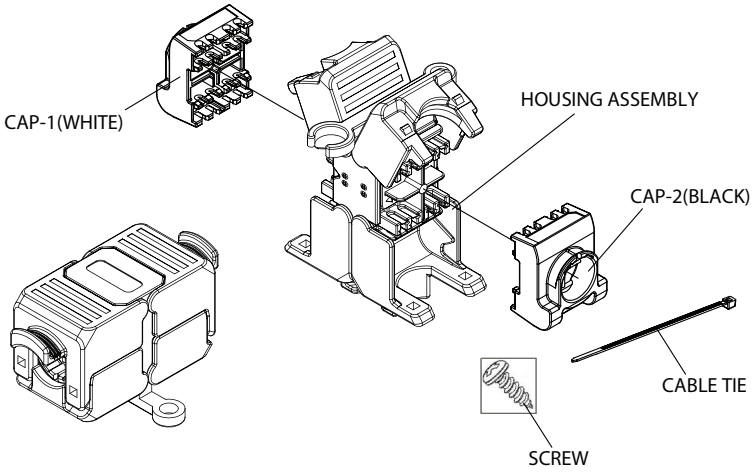

stewart CONNECTOR
a bel group

Stewart Connector
11118 Susquehanna Trail South
Glen Rock, PA 17327-9199

+1 717.235.7512
techhelp@belf.com
belfuse.com/stewart-connector

© 2021 Stewart Connector