DATE	REV	ECN	APP'D. BY
2/3/06	A2	7458	JM
4/11/06	A3	7581	TRM

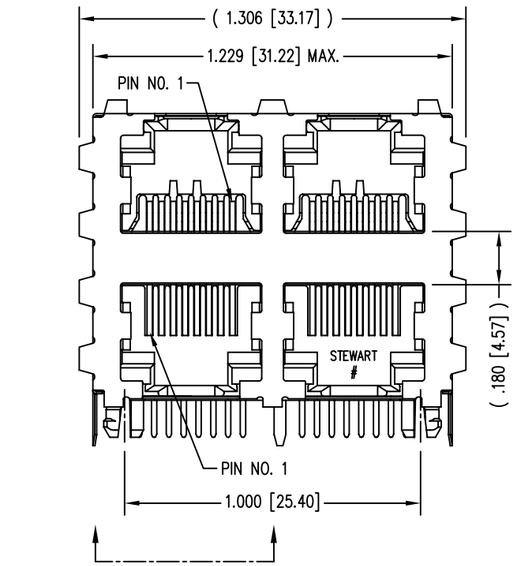

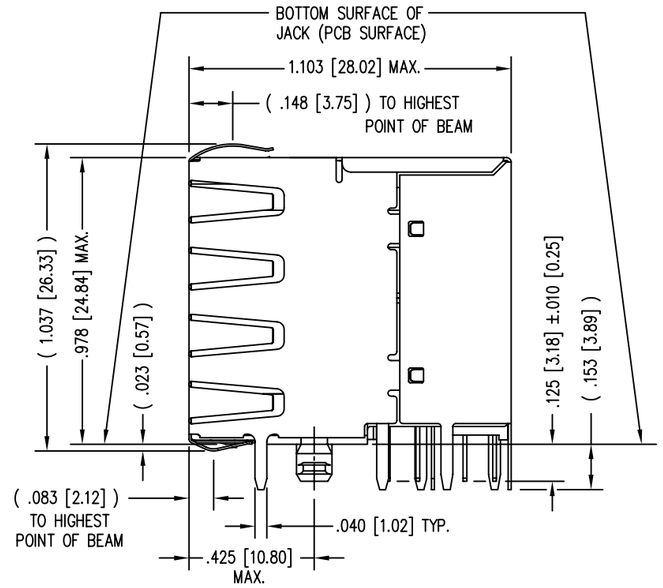

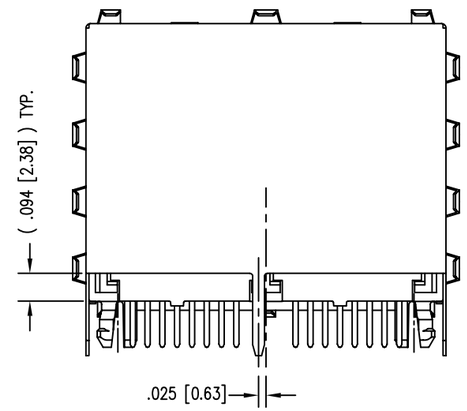

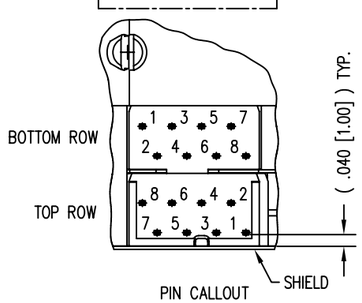

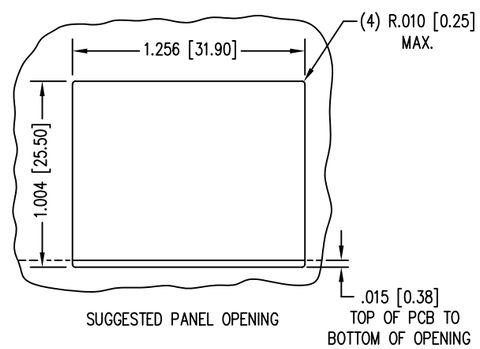

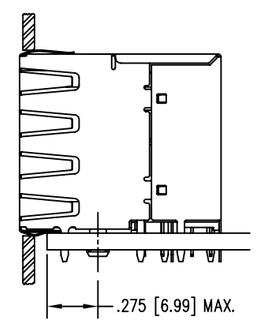

NOTES:

1. CONNECTOR MATERIALS:
   HOUSING: THERMOPLASTIC UL94 V-0
   CONTACTS/SHIELD: COPPER ALLOY
   CONTACT PLATING: SELECTIVE GOLD IN CONTACT AREA
   SEE CHART FOR PART NUMBER
   SHIELD PLATING: NICKEL
2. FOR PRODUCT SPECIFICATION SEE PR022-01.
3. DIMENSIONS AND TOLERANCES COMPLY WITH FCC/CFR 47, PART 68.
4. THE SUGGESTED PANEL OPENING IS INTENDED TO GIVE USER THE ABILITY TO HAVE REASONABLE JACK/PANEL CLEARANCES, YET MAINTAIN GROUNDING CAPABILITY. THESE VARIABLES CAN BE ADJUSTED IN EITHER DIRECTION BUT MAY CARRY SOME CONSEQUENCES IN THE FORM OF LOWER MATING FORCES OR TIGHTER ASSEMBLY TOLERANCES.

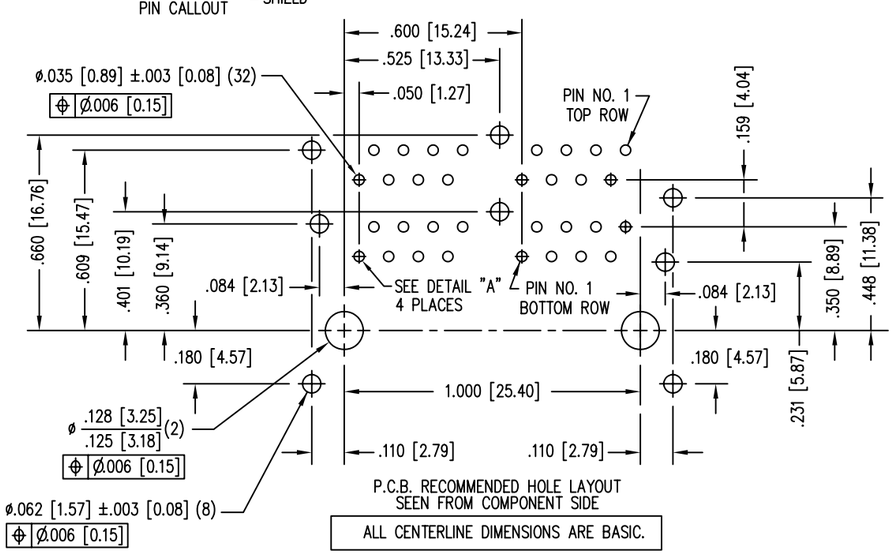

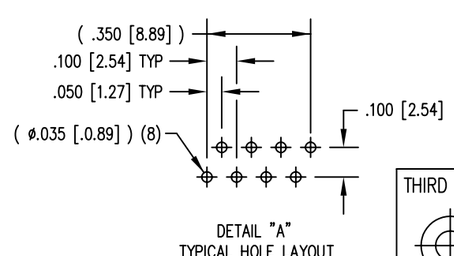

30 MICRO-INCHES [0.76um]	SS-738822S-PG4-AC
CONTACT PLATING IN MATING AREA	PART NUMBER

THIRD ANGLE PROJECTION

DO NOT SCALE DRAWING

DRAWING IS SUBJECT TO CHANGE WITHOUT NOTICE

DIMENSIONS: INCHES [METRIC]

UNLESS OTHERWISE SPECIFIED TOLERANCES ARE ±.005 [0.13] ANGLES ARE ± 1°

SHEET NO. 1 OF 1

RoHS 2002/95/EC

Bel Stewart Connector

11118 Susquehanna Trail South
Glen Rock, PA 17327-9199
(717) 235-7512 Fax: (717) 235-7954 http://www.stewartconnector.com

TITLE: EIGHT CONTACT, EIGHT POSITION SHIELDED STACK JACK ENHANCED SHIELD, 4 PORT (2 ON 2)

THIS DRAWING AND THE SUBJECT MATTER SHOWN THEREON ARE CONFIDENTIAL AND THE PROPRIETARY PROPERTY OF STEWART CONNECTOR ("SCS") AND SHALL NOT BE REPRODUCED, COPIED OR USED IN ANY MANNER WITHOUT PRIOR WRITTEN CONSENT OF "SCS". THE SUBJECT MATTER MAY BE PATENTED OR A PATENT MAY BE PENDING. © SCS

DRN BY:	TM	DATE	1-12-96
APPD BY:	RJ	DATE	1-26-96
DWG NO.	CT730033	REV.	A3

AutoCAD