DATE	REV	ECN	APP'D. BY
9-8-05	A1	7264	TRM
1-19-06	A2	7441	JM
5-25-12	A3	9480	SMN
1-12-15	A4	10178	TRM

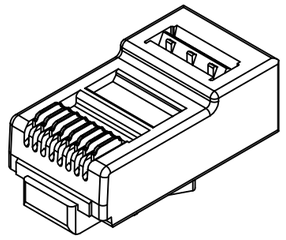

PLUG HOUSING

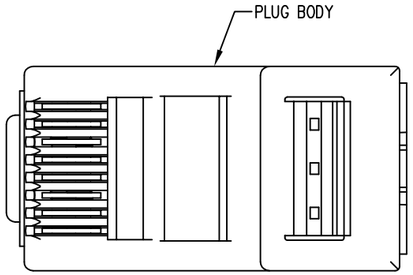

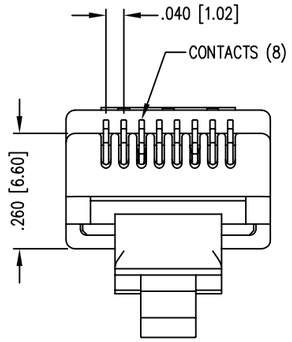

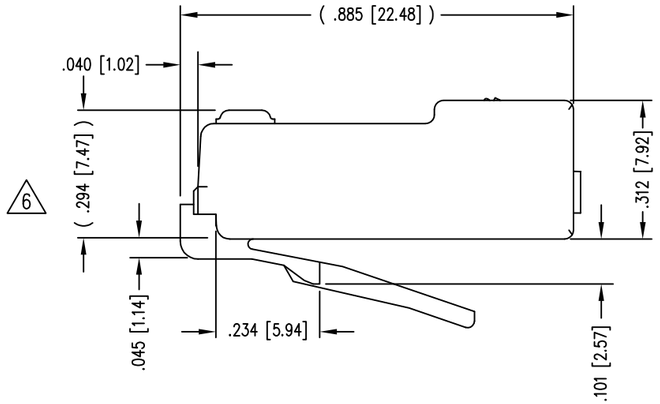

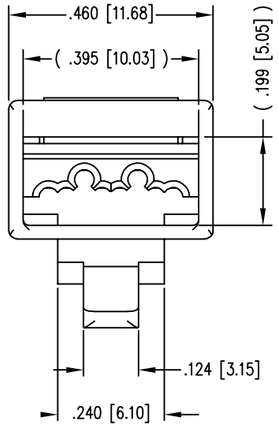

NOTES:

1- PLUG KIT CONSISTS OF :
PRE-INSERTED PLUG BODY
MANAGEMENT BAR

2- MATERIALS :
FRONT HOUSING PLASTIC : CLEAR POLYCARBONATE, UL 94-V0
MANAGEMENT BAR : CLEAR POLYCARBONATE, UL 94-V0
MANAGEMENT BAR COMPENSATOR: TIN PLATED BRASS
CONTACTS : PHOSPHOR BRONZE, SELECTIVE GOLD PLATING

3- CONTACTS TERMINATE SOLID OR STRANDED CONDUCTORS BETWEEN .037 [0.94] TO .042 [1.07] OUTSIDE DIAMETER OF INSULATION.

4- PLUG SPECIFICATION: FOR CATEGORY 6 APPLICATIONS.

5- TOLERANCES COMPLY WITH F.C.C. DIMENSION REQUIREMENTS.

6 TERMINATED PLUG HEIGHT: .237 [6.02] ±.005 [0.13]

7- FOR PRODUCT SPECIFICATION SEE PR026-01

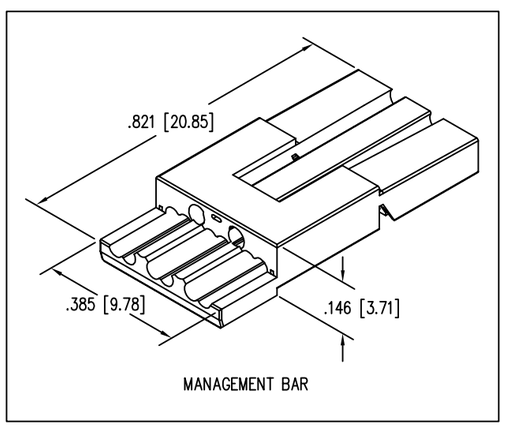

MANAGEMENT BAR

BAGS OF 25	50 MICRO-INCHES [1.27um]	SS-39100-005
BULK	50 MICRO-INCHES [1.27um]	SS-39100-002
PACKAGING	CONTACT PLATING IN MATING AREA	PART NUMBER

RoHS

THIRD ANGLE PROJECTION

DO NOT SCALE DRAWING

DRAWING IS SUBJECT TO CHANGE WITHOUT NOTICE

DIMENSIONS: INCHES [METRIC]

UNLESS OTHERWISE SPECIFIED TOLERANCES ARE ±.005 [0.13] ANGLES ARE ± 1°

SHEET NO. 1 OF 1

stewart CONNECTOR a bel group
11118 Susquehanna Trail South
Glen Rock, PA 17327-9199
(717) 235-7512
http://www.stewartconnector.com

TITLE: 8 POSITION/8 CONDUCTOR STANDARD UNSHIELDED PLUG ASSEMBLY

THIS DRAWING AND THE SUBJECT MATTER SHOWN THEREON ARE CONFIDENTIAL AND THE PROPRIETARY PROPERTY OF STEWART CONNECTOR AND SHALL NOT BE REPRODUCED, COPIED, OR USED IN ANY MANNER WITHOUT PRIOR WRITTEN CONSENT OF STEWART CONNECTOR. THIS PRODUCT MAY BE PROTECTED BY ONE OR MORE OF THE FOLLOWING US PATENTS:
5628647 6402559 6409535 6524128
7753717 8033863
OTHER PATENTS MAY BE PENDING.

DRN BY:	JAF	DATE	1-6-00
APPD BY:	RGC	DATE	1-7-00
DWG NO.	CT390003	REV.	A4

REV. 6/3/05

AutoCAD