

BOURNS®

Features

- Available in E12 series
- Unit height of 6.5 mm
- Current up to 6 A
- RoHS compliant*

Applications

- Input/output of DC/DC converters
- Power supplies for:
  - Portable communication equipment
  - Camcorders
  - LCD TVs
  - Car radios

SRR1206 Series - Shielded High Power Inductors

Electrical Specifications

Bourns Part No.	Inductance 1kHz		Q Ref.	Test Frequency (MHz)	SRF Min. (MHz)	RDC (mΩ)	I rms Max. (A)	I sat Typ. (A)
	(µH)	Tol. %						
SRR1206-2R5ML	2.5	± 20	19	7.96M	30.0	16	6.20	10.00
SRR1206-5R0ML	5.0	± 20	21	7.96M	25.0	22	4.70	8.30
SRR1206-7R5ML	7.5	± 20	22	7.96M	22.0	25	3.80	6.90
SRR1206-100ML	10	± 20	18	2.52M	18.0	35	3.30	5.70
SRR1206-120ML	12	± 20	18	2.52M	17.0	38	3.00	5.50
SRR1206-150ML	15	± 20	19	2.52M	16.0	42	2.80	5.10
SRR1206-180ML	18	± 20	19	2.52M	14.0	50	2.50	4.70
SRR1206-220ML	22	± 20	21	2.52M	11.0	62	2.30	3.80
SRR1206-270ML	27	± 20	21	2.52M	10.0	68	2.00	3.70
SRR1206-330YL	33	± 15	21	2.52M	9.0	90	1.90	3.10
SRR1206-390YL	39	± 15	23	2.52M	9.0	100	1.75	3.00
SRR1206-470YL	47	± 15	22	2.52M	7.0	130	1.60	2.50
SRR1206-560YL	56	± 15	21	2.52M	7.0	155	1.45	2.50
SRR1206-680YL	68	± 15	18	2.52M	7.0	170	1.30	2.20
SRR1206-820YL	82	± 15	16	2.52M	6.0	185	1.20	2.10
SRR1206-101YL	100	± 15	13	0.796M	6.0	220	1.10	1.90
SRR1206-121YL	120	± 15	13	0.796M	5.0	260	1.00	1.80
SRR1206-151KL	150	± 10	13	0.796M	5.0	320	0.90	1.60
SRR1206-181KL	180	± 10	12	0.796M	4.5	330	0.80	1.30
SRR1206-221KL	220	± 10	11	0.796M	4.0	460	0.70	1.20
SRR1206-271KL	270	± 10	11	0.796M	3.5	520	0.65	1.10
SRR1206-331KL	330	± 10	11	0.796M	3.0	660	0.60	1.00
SRR1206-391KL	390	± 10	13	0.796M	2.5	870	0.55	0.95
SRR1206-471KL	470	± 10	12	0.796M	2.5	970	0.50	0.83
SRR1206-561KL	560	± 10	13	0.796M	2.0	1320	0.45	0.80
SRR1206-681KL	680	± 10	11	0.796M	2.0	1500	0.40	0.70
SRR1206-821KL	820	± 10	10	0.796M	2.0	1700	0.35	0.65
SRR1206-102KL	1000	± 10	10	0.252M	1.8	2300	0.30	0.54
SRR1206-122KL	1200	± 10	10	0.252M	1.5	2650	0.25	0.51
SRR1206-152KL	1500	± 10	10	0.252M	1.2	3500	0.20	0.42

Electrical Schematic

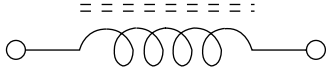

DIMENSIONS: MM / (INCHES)

General Specifications

Test Voltage.....1 V
Reflow Soldering ...230 °C, 50 sec. max.
Operating Temperature .-40 °C to +125 °C
(Temperature rise included)
Storage Temperature..-40 °C to +125 °C
Resistance to Soldering Heat
.....260 °C for 5 sec.

Materials

Core.....Ferrite DR and RI core
Wire.....Enameled copper
Base .....LCP E4008
Terminal .....Cu/Ni/Sn
Rated Current..Ind. drop 10 % typ. at Isat
Temperature Rise
.....40 °C max. at rated Irms
Packaging.....600 pcs. per reel

Product Dimensions

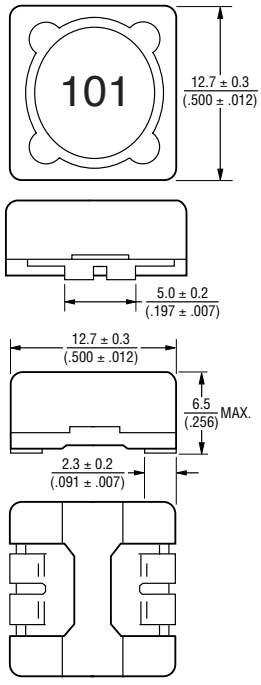

Recommended Layout

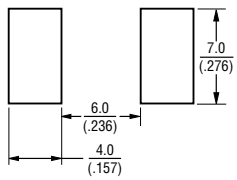

*RoHS Directive 2002/95/EC Jan 27 2003 including Annex
Specifications are subject to change without notice.
Customers should verify actual device performance in their specific applications.

Packaging Specifications

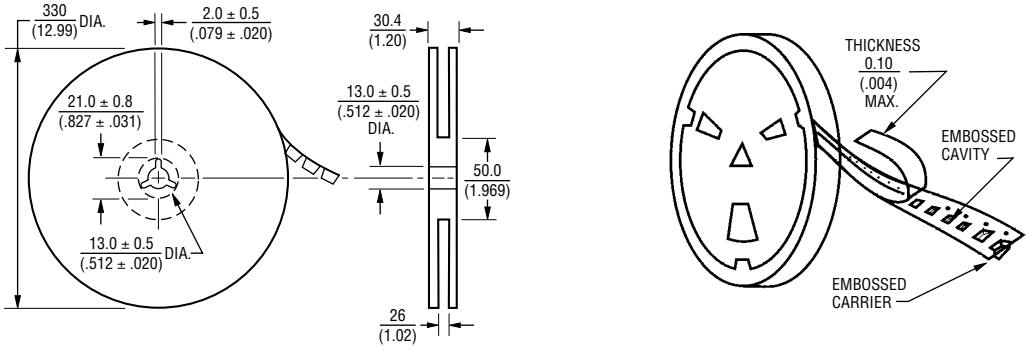

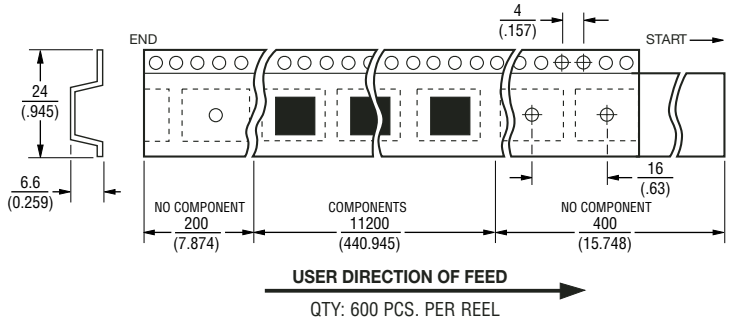

QTY: 600 PCS. PER REEL

DIMENSIONS: MM / (INCHES)

Specifications are subject to change without notice.
Customers should verify actual device performance in their specific applications.