星合电子
XINGHE ELECTRONICS

SRF820 THRU SRF8200

SCHOTTKY BARRIER RECTIFIER

Reverse Voltage - 20 to 200 Volts
Forward Current - 8.0Amperes

FEATURES

- Plastic package has Underwriters Laboratory Flammability Classification 94V-0
- Metal silicon junction ,majority carrier conduction
- Guard ring for overvoltage protection
- Low power loss ,high efficiency
- High current capability ,Low forward voltage drop
- Single rectifier construction
- High surge capability
- For use in low voltage ,high frequency inverters, free wheeling ,and polarity protection applications
- High temperature soldering guaranteed:260℃/10 seconds, 0.25"(6.35mm)from case
- Component in accordance to RoHS 2002/95/EC and WEEE 2002/96/EC



ITO-220AB

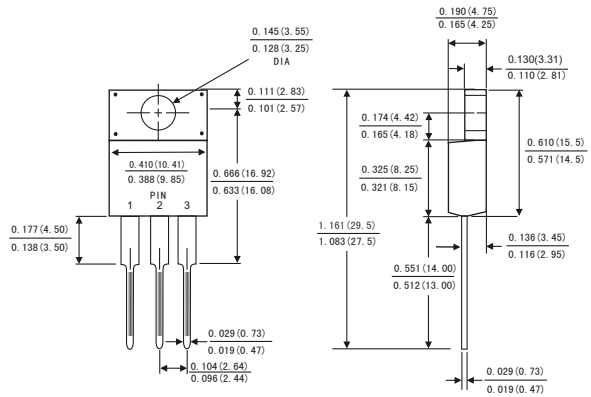

Dimensions in inches and (millimeters)

MECHANICAL DATA

- *Case*: JEDEC ITO-220AB molded plastic body
- *Terminals*: Lead solderable per MIL-STD-750,method 2026
- *Polarity*: As marked
- *Mounting Position*: Any
  Weight: 0.08ounce, 2.24 gram

MAXIMUM RATINGS AND ELECTRICAL CHARACTERISTICS

(Ratings at 25℃ ambient temperature unless otherwise specified ,Single phase ,half wave ,resistive or inductive load. For capacitive load,derate by 20%.)

	Symbols	SRF 820	SRF 830	SRF 840	SRF 850	SRF 860	SRF 880	SRF 8A0	SRF 8150	SRF 8200	Units
Maximum repetitive peak reverse voltage	V_{RRM}	20	30	40	50	60	80	100	150	200	Volts
Maximum RMS voltage	V_{RMS}	14	21	28	35	42	56	70	105	140	Volts
Maximum DC blocking voltage	V_{DC}	20	30	40	50	60	80	100	150	200	Volts
Maximum average forward rectified current (see Fig.1)	$I_{(AV)}$	8.0									Amps
Peak forward surge current 8.3ms single half sine-wave superimposed on rated load (JEDEC method)	I_{FSM}	150.0									Amps
Maximum instantaneous forward voltage at 8.0 A(Notes 1)	V_F	0. 60			0.75		0.85		0.90	0.95	Volts
Maximum instantaneous reverse current at rated DC blocking voltage(Notes 1) T_A=25℃	I_R	0. 5									mA
T_A=125℃		15			50						
Typical thermal resistance (Notes 2)	$R_{\theta JC}$	2.5									℃/W
Operating junction temperature range	T_J	-65 to+125			-65 to+150						℃
Storage temperature range	T_{STG}	-65 to+150									℃

Notes: 1.Pulse test: 300 μs pulse width,1% duty cycle
2.Thermal resistance from junction to case

SRF820 THRU SRF8200

SCHOTTKY BARRIER RECTIFIER

Reverse Voltage - 20 to 200 Volts
Forward Current - 8.0Amperes

FIG.1-FORWARD CURRENT DERATING CURVE

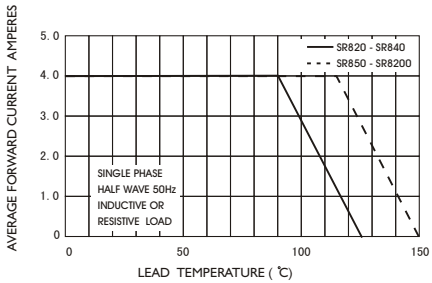

FIG.2-TYPICAL INSTANTANEOUS FORWARD CHARACTERISTICS

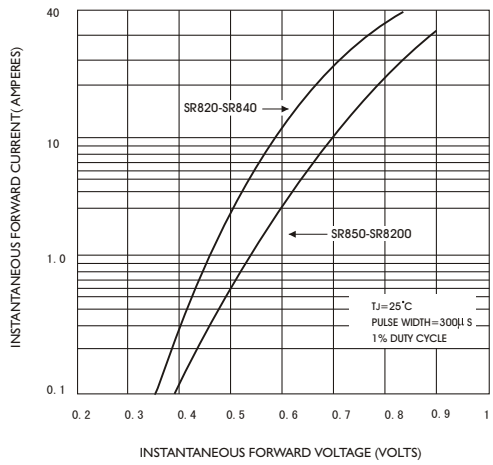

FIG.4-TYPICAL JUNCTION CAPACITANCE

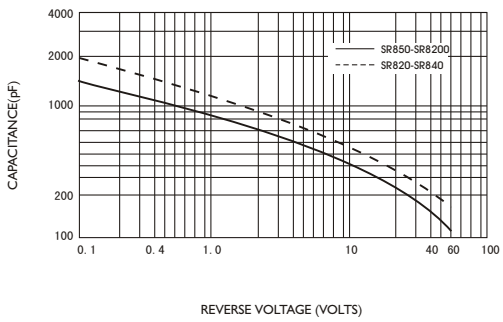

FIG.3-TYPICAL REVERSE CHARACTERISTICS

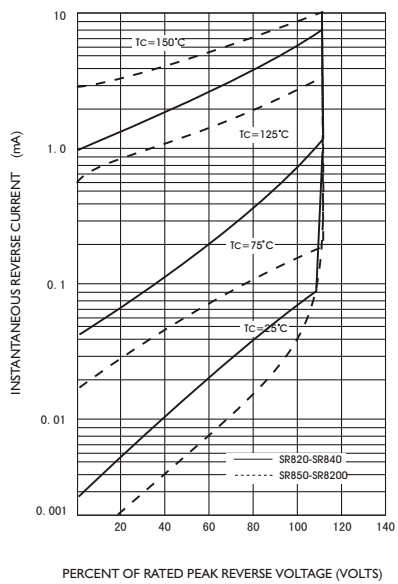

FIG.5-MAXIMUM NON-REPETITIVE PEAK FORWARD SURGE CURRENT

