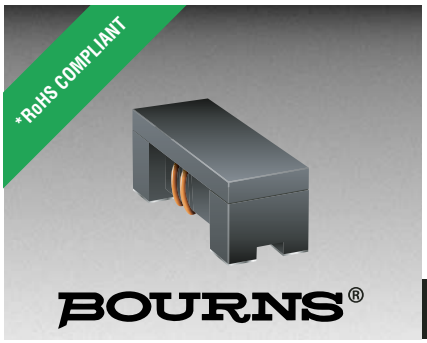

Features

- High impedance value
- Current rating up to 450 mA
- RoHS compliant*

Applications

- Noise suppression
- Personal computers
- Display panels

SRF2012 Series - Common Mode Chip Inductors

Electrical Specifications

Bourns Part No.	Impedance @ 100 MHz (Ω)	Impedance @ 100 MHz Tolerance (%)	Rated Voltage (DC)	Withstanding Voltage (DC)	Insulation Resistance (MΩ)	DCR Max. (Ω)	IDC Max. (mA)
SRF2012-300Y	30	±25	50	125	10	0.20	450
SRF2012-670Y	67	±25	50	125	10	0.25	400
SRF2012-900Y	90	±25	50	125	10	0.35	330
SRF2012-121Y	120	±25	50	125	10	0.30	370
SRF2012-161Y	160	±25	50	125	10	0.40	300
SRF2012-181Y	180	±25	50	125	10	0.35	330
SRF2012-201Y	200	±25	50	125	10	0.35	330
SRF2012-221Y	220	±25	50	125	10	0.35	310
SRF2012-261Y	260	±25	50	125	10	0.40	300
SRF2012-301Y	300	±25	50	125	10	0.40	290
SRF2012-361Y	360	±25	50	125	10	0.45	280
SRF2012-371Y	370	±25	50	125	10	0.45	280
SRF2012-501Y	500	±25	50	125	10	0.55	170
SRF2012-671Y	670	±25	50	125	10	0.60	140
SRF2012-901Y	900	±25	50	125	10	0.60	80

Impedance vs. Frequency

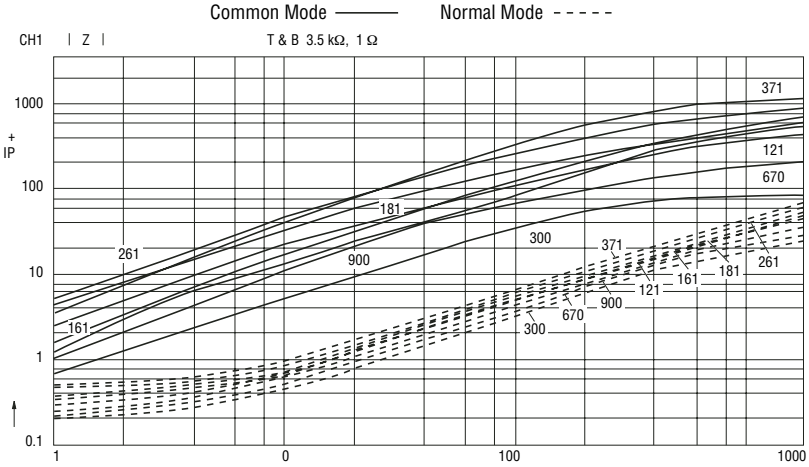

Z (f)	Common Mode 1 MHz	3 MHz	10 MHz	30 MHz	100 MHz	300 MHz	1 GHz	Normal Mode 1 MHz	3 MHz	10 MHz	30 MHz	100 MHz	300 MHz	1 GHz
300	0.64	1.94	5.99	14.34	31.33	53.67	93.89	0.200	0.240	0.470	1.180	3.490	9.850	34.370
670	1.45	4.42	13.62	32.45	70.17	117.65	201.20	0.250	0.290	0.550	1.340	3.830	10.560	34.260
900	1.04	3.09	10.14	28.96	90.46	254.50	491.35	0.280	0.330	0.610	1.520	4.150	11.260	38.760
121	2.64	7.96	23.80	56.67	126.11	218.67	417.23	0.330	0.380	0.670	1.640	4.710	13.030	43.460
161	1.79	5.35	17.50	49.70	153.36	327.38	574.77	0.390	0.440	0.760	1.850	5.290	14.560	53.660
171	3.87	11.68	35.09	82.74	180.25	314.98	587.53	0.400	0.450	0.750	1.800	5.050	13.770	48.810
261	5.33	15.85	46.54	109.83	263.01	479.42	895.05	0.450	0.500	0.850	2.040	5.770	15.820	62.080
371	4.16	12.42	40.38	113.88	369.14	802.72	1135.60	0.510	0.560	0.890	2.070	5.760	15.600	72.730

General Specifications

Reflow soldering.....230 °C; 50 sec max.
Operating Temperature ..-55 °C to +125 °C
(Temperature rise included)
Storage Temperature..-55 °C to +125 °C
Resistance to Soldering Heat
.....260 °C, 10 sec. max.

Materials

Core.....Ferrite
Wire.....Enameled copper
Terminal.....Ag/Ni/Sn
Packaging.....2000 pcs. per reel

Product Dimensions

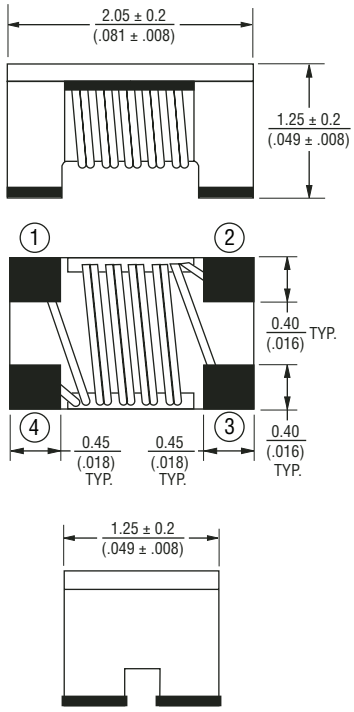

Recommended Layout

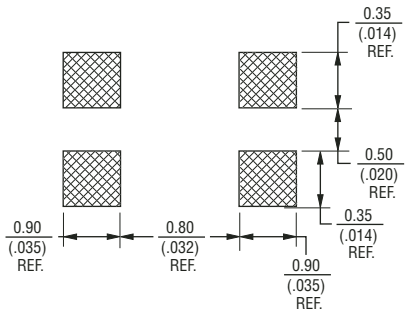

DIMENSIONS: MM / (INCHES)

*RoHS Directive 2002/95/EC Jan 27 2003 including Annex
Specifications are subject to change without notice.
Customers should verify actual device performance in their specific applications.

Soldering Profile

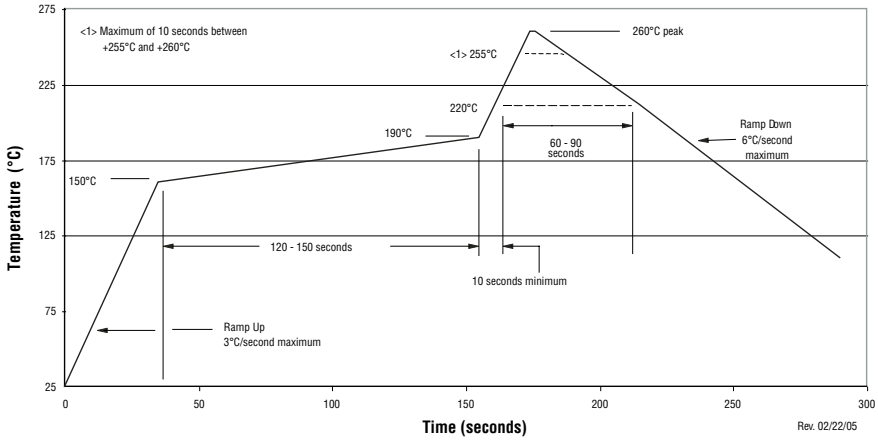

Electrical Schematic

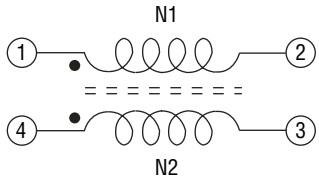

Packaging Specifications

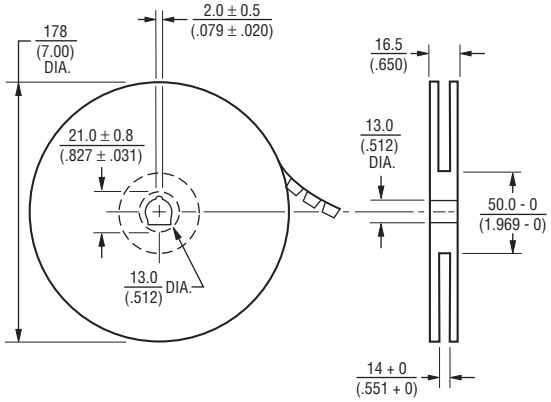

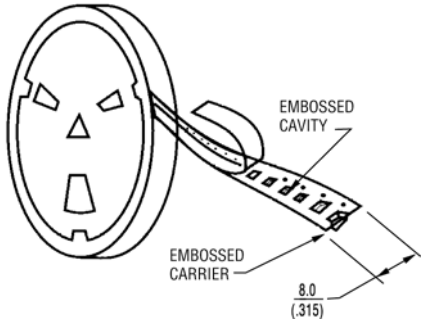

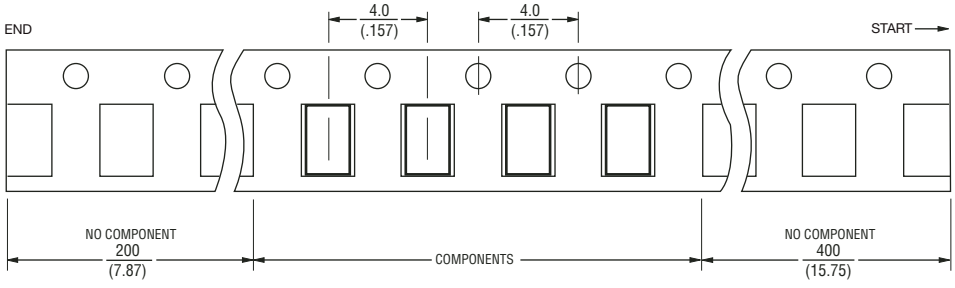

DIMENSIONS: MM / (INCHES)

USER DIRECTION OF FEED

QTY: 2000 PCS. PER REEL

Specifications are subject to change without notice.
Customers should verify actual device performance in their specific applications.