SR 300 SR 1500

FAST RECOVERY,100ns. HIGH VOLTAGE 25ma,MINIATURE SILICON RECTIFIERS

- SMALL SIZED MOLDED PACKAGE
- PRV 3,000 TO 15,000 VOLTS
- AVALANCHE CHARACTERISTICS
- LOW LEAKAGE

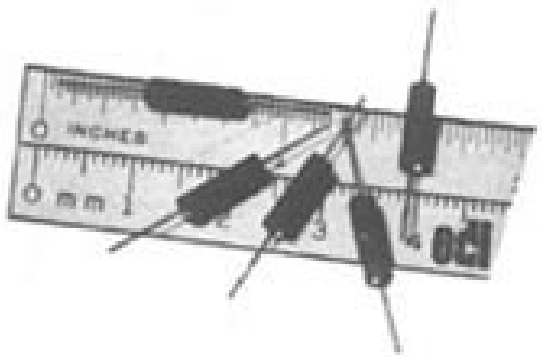

EDI Type	PRV Volts	COLOR CODE DOT
SR300	3,000	Orange
SR500	5,000	Green
SR800	8,000	Gray
SR1000	10,000	Red
SR1200	12,000	Blank
SR1500	15,000	White

ELECTRICAL CHARACTERISTICS(at T_A=25 °C Unless Otherwise Specified)

Average Rectified Forward Current @ 50 °C, I_O	25 mA
Max. Peak Surge Current, I_{FSM} (8.3ms)	3 Amp
Max. Reverse Recovery ,(Fig.4), t_{rr}	100nanosec
Max. Forward Voltage Drop @ 25 mA, V_F	26Volts
Max. DC Reverse Current @ PRV and 25°C, I_R	1 μA
Max. DC Reverse Current @ PRV and 100°C, I_R	15 μA
Ambient Operating Temperature Range, T_A	-55 °C to +150 °C
Storage T emperature Range, T_{STG}	-55 °C to +150 °C

NOTES:

1. It is recommended that a proper heat sink be used on the terminals of this device between the body and soldering point to prevent damage from excess heat.

2. If operated over 10,000v/inch in length, devices should be immersed in oil or re - encapsulated.

EDI reserves the right to change these specifications at any time without notice.

FIG.1

OUTPUT CURRENT vs AMBIENT TEMPERATURE

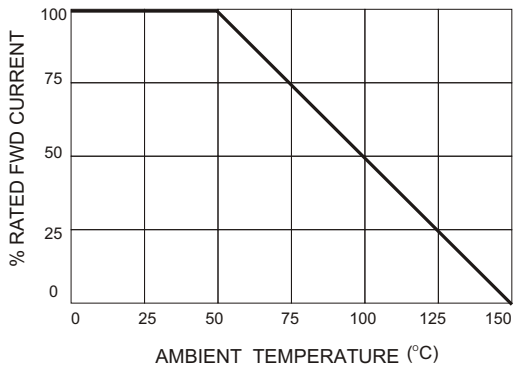

FIG.2

NON- REPETITIVE SURGE CURRENT

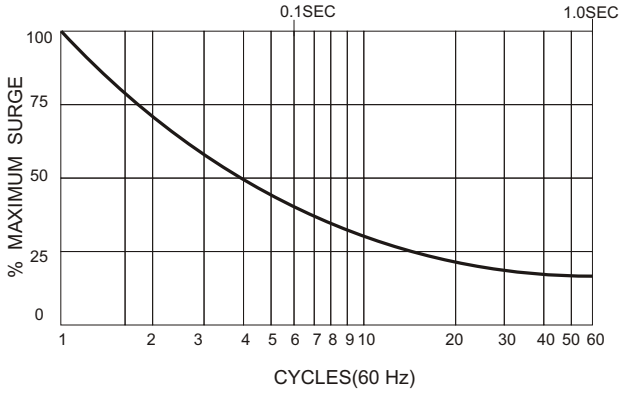

FIG.3

MECHANICAL

Polarity - cathode dot.
See color chart
Leads - solid silver

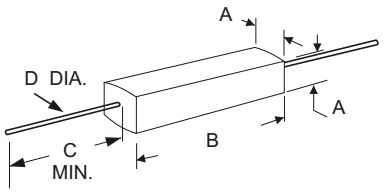

DIMENSIONS

	INCHES		MILLMETERS	
	Min.	Max.	Min.	Max.
A	.095	.125	2.41	3.17
B	.380	.420	9.65	10.66
C	.300	-	7.60	-
D	.011	.016	0.27	0.40

FIG.4

REVERSE RECOVERY TEST METHOD

RECOVERY WAVE FORM

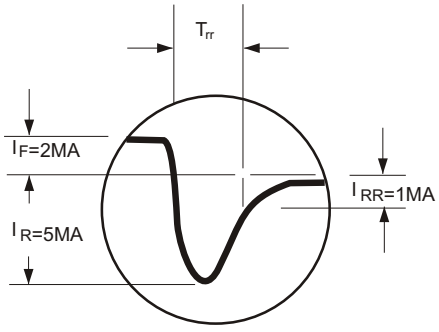

WAVE FORMS

RECOVERY WA VE FORM

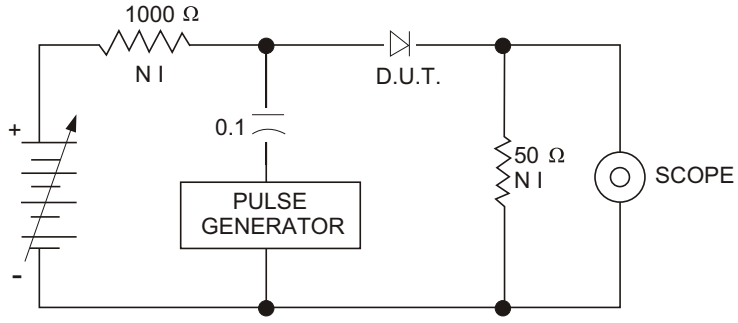

CIRCUIT

ELECTRONIC DEVICES, INC. DESIGNERS AND MANUFACTURERS OF SOLID STATE DEVICES SINCE 1951.
21 GRAY OAKS AVENUE * YONKERS. NEW YORK 10710 914-965-4400 * FAX 914-965-5531 * 1-800-678-0828
e-mail:sales@edidiodes.com * website: http://www.edidiodes.com