SAMYANG ELECTRONICS *SR3020CT--- SR30200CT*

SCHOTTKY BARRIER RECTIFIER

VOLTAGE RANGE: 20 --- 200 V
CURRENT:30.0A

FEATURES

- ◇Metal-semiconductor junction with guard ring
- ◇Epitaxial construction
- ◇Low forward voltage drop,low switching losses
- ◇High surge capability
- ◇For use in low voltage,high frequency inverters free wheeling,and polarity protection applications
- ◇The plastic material carries U/L recognition 94V-0

MECHANICAL DATA

- ◇Case:JEDEC TO-220AB,molded plastic
- ◇Terminals: Axial lead ,solderable per MIL- STD-750,Method 2026
- ◇Polarity: As marked
- ◇Weight: 0.08ounces,2.24 grams
- ◇Mounting position: Any

TO - 220AB

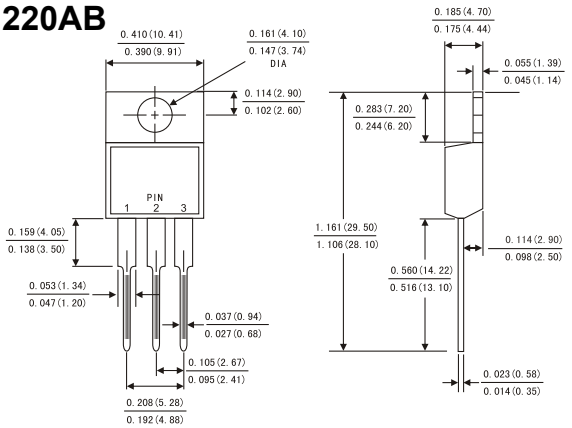

Dimensions in inches and (millimeters)

MAXIMUM RATINGS AND ELECTRICAL CHARACTERISTICS

Ratings at 25℃ ambient temperature unless otherwise specified.

Single phase,half wave,60 Hz,resistive or inductive load. For capacitive load,derate by 20%.

		Symbols	SR 3020CT	SR 3030CT	SR 3040CT	SR 3045CT	SR 3060CT	SR 3080CT	SR **30A0CT**	SR 30150CT	SR 30200CT	Units
Maximum repetitive peak reverse voltage		V_{RRM}	20	30	40	45	60	80	100	150	200	Volts
Maximum RMS voltage		V_{RMS}	14	21	28	32	42	56	70	105	140	Volts
Maximum DC blocking voltage		V_{DC}	20	30	40	45	60	80	100	150	200	Volts
Maximum average forward rectified current(see Fig.1)	Per leg	$I_{(AV)}$	15.0									Amps
	Total device		30.0									
Peak forward surge current 8.3ms single half sine-wave superimposed on rated load (JEDEC method)		I_{FSM}	250.0									Amps
Maximum instantaneous forward voltage at 30.0 A		V_F	0.60				0.75	0.85		0.95		Volts
Maximum instantaneous reverse current at rated DC blocking voltage(Note 1)	T_c=25℃	I_R	0.2									mA
	T_c=125℃		30				50					
Typical thermal resistance (Note 2)		$R_{\theta JC}$	3.0									℃/W
Operating junction temperature range		T_J	-65 to+150									℃
Storage temperature range		T_{STG}	-65 to+150									℃

NOTE: 1. Pulse test:300us pulse width,1% duty cycle.
2. Measured at 1.0MHz and applied reverse voltage of 4.0V DC.
3.Thermal resistance junction to ambient

www.diode.co.kr

Download from alldatasheet.com

FIG.1-FORWARD CURRENT DERATING CURVE

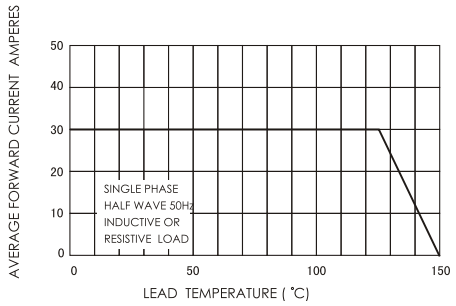

FIG.2-MAXIMUM NON-REPETITIVE PEAK FORWARD SURGE CURRENT PER DIODE

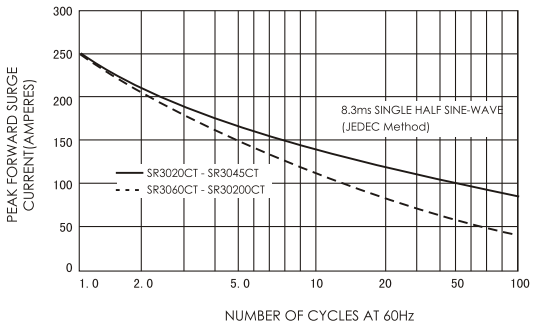

FIG.3-TYPICAL INSTANTANEOUS FORWARD CHARACTERISTICS

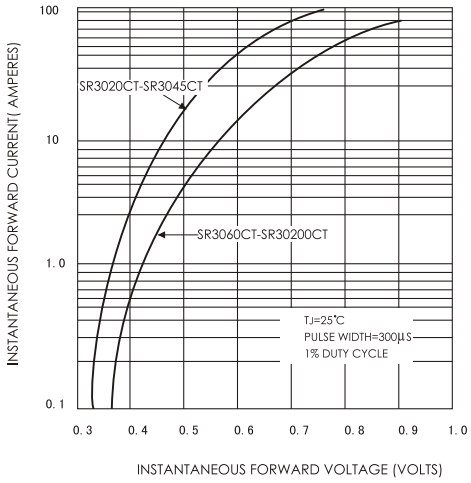

FIG.4-TYPICAL REVERSE CHARACTERISTICS

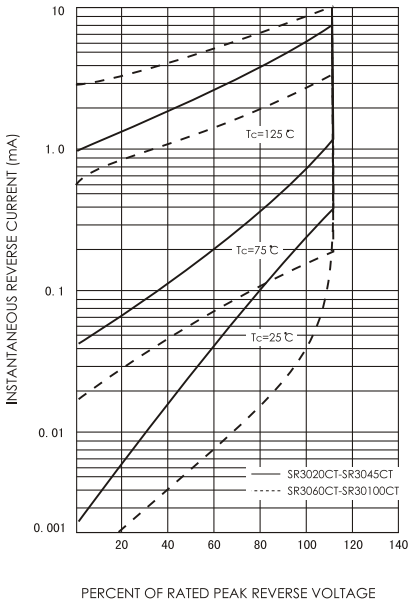

Download from alldatasheet.com