SR302 thru SR310

MINIATURE SCHOTTKY BARRIER RECTIFIER

CHENG-YI ELECTRONIC

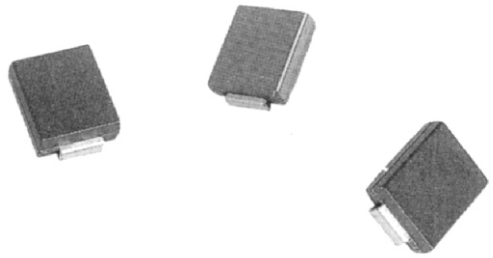

VOLTAGE RANGE
20 TO 80 Volts
CURRENT
3.0 Amperes

FEATURES

- Low switching noise
- Low forward voltage drop
- High current capability
- High switching capability
- High reliability
- High surge capability

MECHANICAL DATA

- Case:Molded plastic
- Epoxy:UL 94V-0 rate flame retardant
- Lead:MIL-STD-202 method 208 quaranteed
- Mounting position:Any

DO-214AB

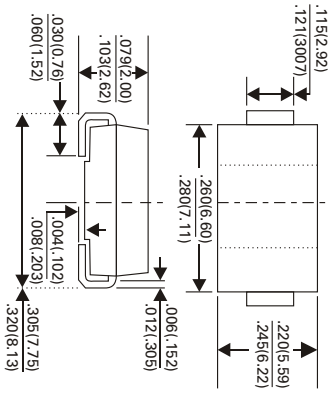

SMD-SUFFIX "S"

SMC

DO-201AD

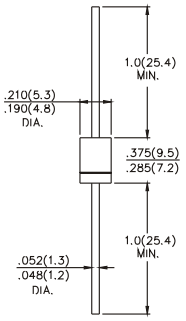

Dimensions in inches and (millimeters)

MAXIMUM RATINGS AND ELECTRICAL CHARACTERISTICS

At T_A=25°C unless otherwise specified. Single phase, half wave, 60Hz, resistive or inductive load.
All values except Maximum RMS Voltage are registered JEDEC Parameters.

	SR302	SR303	SR304	SR305	SR306	SR308	SR310	UNITS
Maximum Recurrent Peak Reverse Voltage	20	30	40	50	60	80	100	V
Maximum RMS Voltage	14	21	26	35	42	56	80	V
Maximum DC Blocking Voltage to 150°C Max	20	30	40	50	60	80	80	V
Maximum Average Forward Rectified Current at 75°C	3.0							A
Maximum Overload Surge Current at 1 cycle	80							A
Maximum Forward Voltage at 3.0 ADC	0.50			0.75		0.85		V
Maximum Full Load Reverse Current Full Cycle Average at 25°C	0.5							mADC
Maximum DC Reverse Current at Rated DC Blocking Voltage and 100°C	30							mADC
Typical Junction Capacitance (NOTE 1)	180							pF
Typical Thermal Resistance (NOTE 2) $R\theta JA$	40.0							°C / W
Operating Temperature Range	-55 to +125							°C
Storage Temperature Range	-55 to +125							°C

Notes : 1. Measured at 1 MHz and applied reverse voltage of 4.0 VDC.
2. Thermal Resistance Junction to Ambient.

SR302 thru SR310

MINIATURE SCHOTTKY BARRIER RECTIFIER

CHENG-YI ELECTRONIC

RATING AND CHARACTERISTICS CURVES
SR302 THRU SR310

Fig.1 - TYPICAL REVERSE CHARACTERISTICS

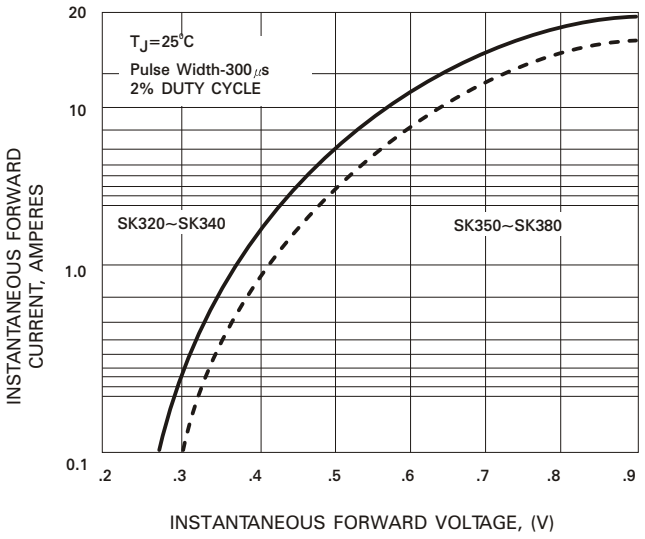

Fig.2 - REVERSE INSTANTANEOUS CHARACTERISTICS

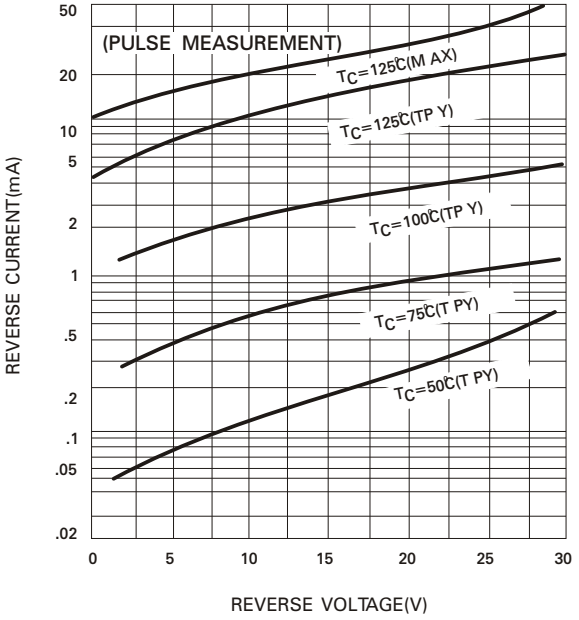

Fig.5 - MAXIMUM CURRENT OUTPUT Vs, AMBIENT TEMPERATURE.

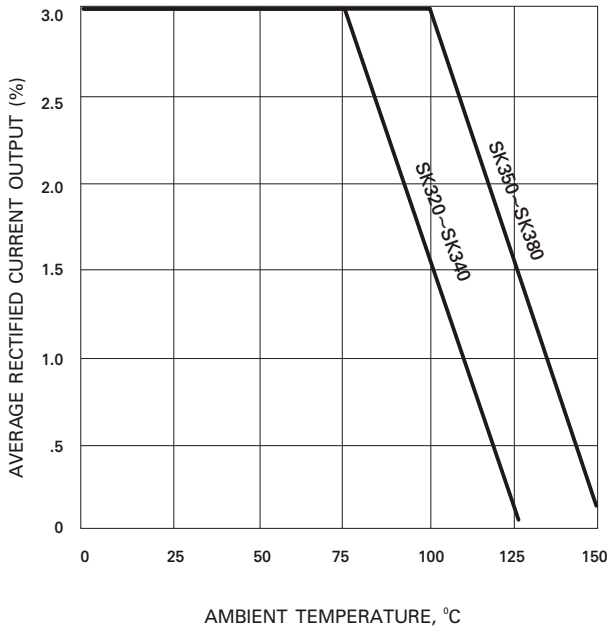

Fig.4 - TYPICAL JUNCTION CAPACITANCE

