SEMICONDUCTOR

SR30100LCT,SRF30100LCT,SR30100LD1

LOW VF SCHOTTKY BARRIER RECTIFIER

Reverse Voltage - 100 Volts
Forward Current - 30.0Amperes

TO-220AB
SR30100LCT

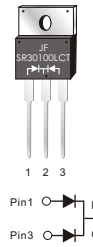

ITO-220AB
SRF30100LCT

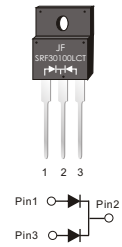

TO-263
SR30100LD1

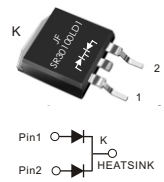

FEATURES

- Power pack
- Metal silicon junction ,majority carrier conduction
- Guard ring for overvoltage protection
- Low power loss ,high efficiency
- High current capability ,low forward voltage drop
- High forward surge capability
- High frequency operation
- Meets MSL Level 1，per J-STD-020, LF MAX peak of 245℃（for TO-263 package）
- Solder bath temperature 275℃ maximum，10s，per JESD22-B106（for TO-220AB and ITO-220AB package）
- Component in accordance to RoHS 2011/65/EU

Pb
RoHS
COMPLIANT

MECHANICAL DATA

- Case: JEDEC TO-220AB、ITO-220AB、TO-263
- Molding compound meets UL94V-0 flammability rating
- Terminals: Lead solderable per J-STD-002 and JESD22-B102
- Polarity: As marked
- Mounting Torque: 10 in-lbs maximum

TYPICAL APPLICATIONS

For use in low voltage ,high frequency inverters ,DC/DC converters, free wheeling ,and polarity protection applications

PRIMARY CHARACTERISTICS	
$I_{F(AV)}$	2×15A
V_{RRM}	100V
I_{FSM}	250A
V_F at I_F=5. 0A,Per leg	0. 48V
I_R	20μA
T_J(MAX)	150℃
Package	TO-220AB,ITO-220AB, TO-263
Diode variations	Common cathode

MAXIMUM RATINGS

(Ratings at 25℃ ambient temperature unless otherwise specified)

Parameter		Symbol	SR30100LCT, SRF30100LCT,SR30100LD1	Unit
Maximum repetitive peak reverse voltage		V_{RRM}	100	V
Maximum average forward rectified current (see fig.1)	Per leg	$I_{F(AV)}$	15.0	A
	Total device		30.0	
Peak forward surge current 8.3ms single half sine-wave superimposed on rated load (JEDEC method at rated TL)		I_{FSM}	250	A
Peak repetitive reverse current per diode at tp=2μs 1KHz		I_{RRM}	0.5	A
Operating junction and Storage temperature range		T_J ,Tstg	-55 to+150	℃
Isolation voltage (ITO-220AB only) from terminals to heatsink t=1 min		V_{AC}	1500	V

RATINGS AND CHARACTERISTIC OF SR30100LCT,SRF30100LCT,SR30100LD1

ELECTRICAL CHARACTERISTCS（T_A=25℃ Unless otherwise noted）

Parameter	Test Conditions		Symbol	TYP.	MAX.	Unit
Instaneous forward voltage	Per leg I_F=15.0A	T_A=25℃	V_F 1)	0. 69	0. 71	V
		T_A=100℃		0. 67	–	
		T_A=125℃		0. 64	–	
	Per leg I_F=5.0A	T_A=25℃		0. 50	0. 52	
		T_A=100℃		0. 49	–	
		T_A=125℃		0. 48	–	
Reverse current	V_R=100V	T_A=25℃	I_R 2)	20	50	μA
		T_A=100℃		2	5	mA
		T_A=125℃		8	20	
Typical junction capacitance	4V, 1MHz		C_J	570		pF

Notes: 1.Pulse test: 300 μs pulse width,1% duty cycle

2.Pulse test: pulse width≤40ms

THERMAL CHARACTERISTCS（T_A=25℃ Unless otherwise noted）

Parameter	Symbol	SR30100LCT	SRF30100LCT	SR30100LD1	Unit
Typical thermal resistance 3)	$R_{\theta JC}$	2. 5	4. 5	2. 5	℃/W

3.Thermal resistance from junction to case

AVAILABALE PACK INFORMATION

Product code	Pack	Box Size L×W×H(mm)	Quantity(pcs/box)	Carton SizeL×W×H(mm)	Quantity(box/carton)
SR30100LCT-TO-220AB	P/T	558×148×38	1000	565×225×170	5
SRF30100LCT-ITO-220AB	P/T	558×148×38	1000	565×225×170	5
SR30100LD1-TO-263	P/T	558×148×38	1000	565×225×170	5

RATINGS AND CHARACTERISTIC OF SR30100LCT,SRF30100LCT,SR30100LD1

FIG.1-FORWARD CURRENT DERATING CURVE

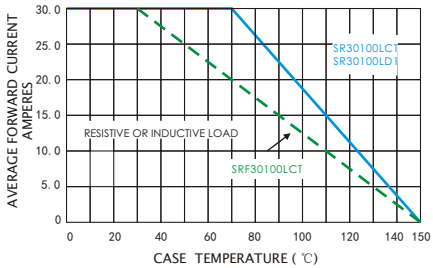

FIG.2-MAXIMUM NON-REPETITIVE PEAK FORWARD SURGE CURRENT

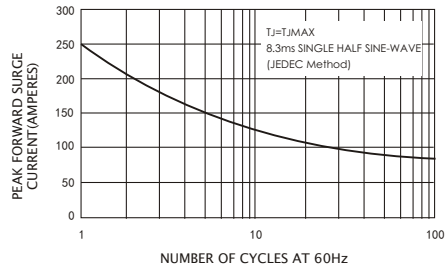

FIG.3-TYPICAL INSTANTANEOUS FORWARD CHARACTERISTICS

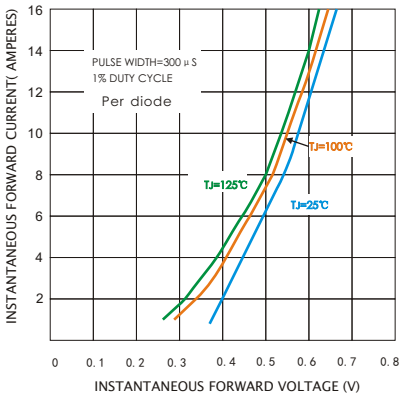

FIG.4-TYPICAL REVERSE CHARACTERISTICS

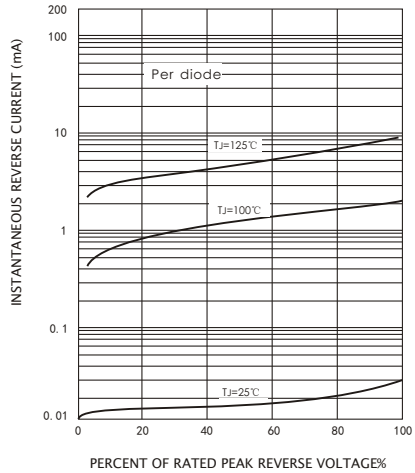

FIG.5-TYPICAL JUNCTION CAPACITANCE

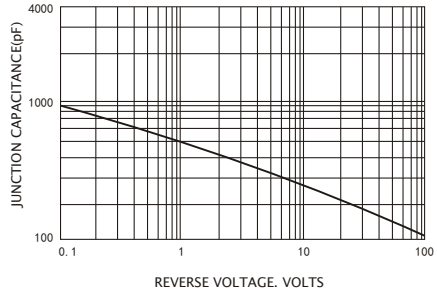

PACKAGE OUTLINE DIMENSIONS

TO-220AB

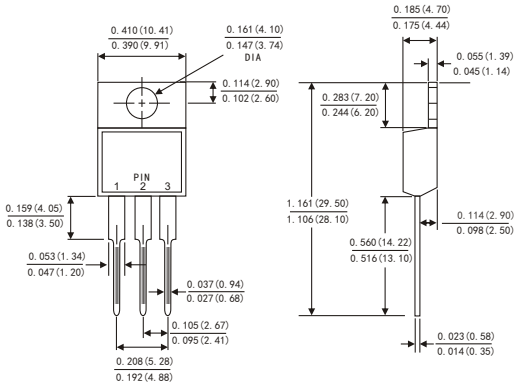

ITO-220AB

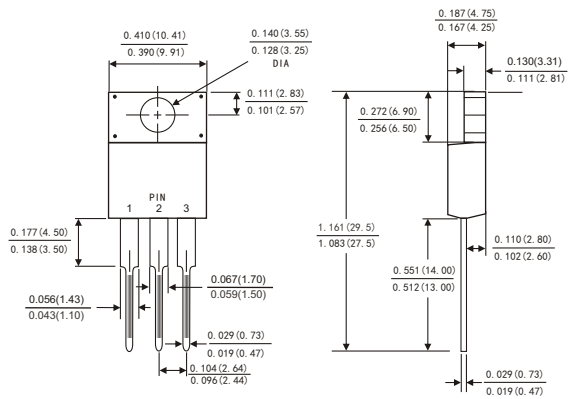

TO-263

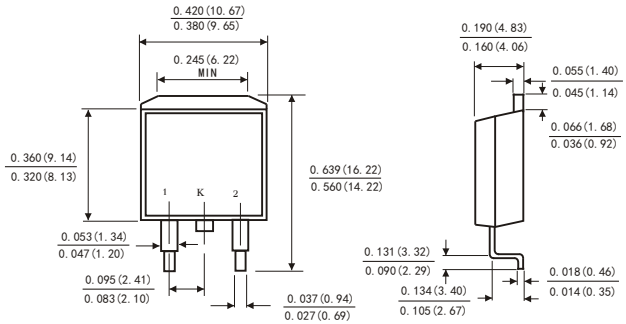

Suggested Pad Layout

（TO-263）

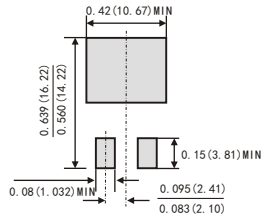

Dimensions in inches and (millimeters)