SR-A29B0 Series

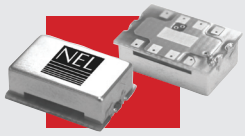

Size, mm
9 x 14

I/O
8 pad

Supply Voltage
3.3V / 2.5V

- Patent Pending, harmonic multiplication for extremely low jitter
- High frequency output eliminates the need for PLL multiplication
- Stabilities over temperatures as low as ±20ppm eliminates SAW oscillator temperature problems

NEL FREQUENCY CONTROLS, INC.

For the most up to date specifications on each NEL product, log on to our website—www.nelfc.com

Differential Positive ECL (DPECL)
SR-A29B0 Series *Rev G*

Frequency Range: 250.0 MHz-1.7 GHz

Description

The SR-A29B0 Series of quartz crystal oscillators provide DPECL Fast Edge compatible signals. This device is to operate using positive voltage and uses multiple ground pins for improved signal integrity. This device is intended to operate on positive voltage for PECL applications.

Features

- Wide frequency range – 250.0MHz to 1.7GHz
- User specified tolerance available
- Will withstand SMD reflow temperatures of 183°C for 4 minutes maximum
- High shock resistance, to 1000g
- High Reliability - NEL HALT/HASS qualified for crystal oscillator start-up conditions
- Cover connected to ground
- 3.3V and 2.5V versions available

Creating a Part Number

SR - A29BX - FREQ

Package Code
SR 8 pad 9x14 mm SMD

Input Voltage

Code	Specification
A	3.3 V
B	2.5 V

Tolerance/Performance

0	±100 ppm 0-70°C
1	±50 ppm 0-70°C
7	±25 ppm 0-70°C
9	Customer Specific
A	±20 ppm 0-70°C
B	±50 ppm -40 to +85°C
C	±100 ppm -40 to +85°C

Drawing Specifications

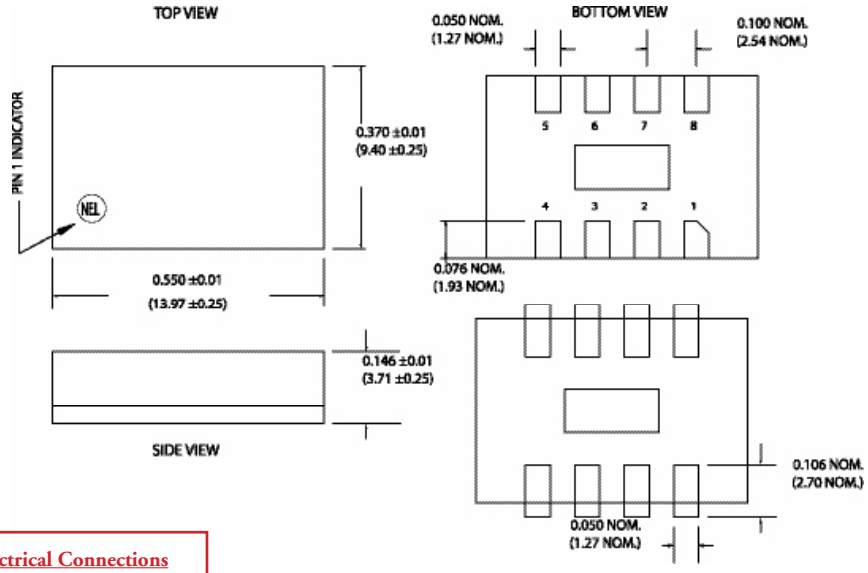

Electrical Connections

Pin	Connection
1	V_{CC}
2	Ground
3	NC or Ground
4	Q Output
5	/Q Output
6	Ground
7	Ground
8	Enable

Recommended Board Layout
Dimensions shown in inches (mm).

The metallic center pad was designed for mechanical support. Grounding of this pad is optional. It measures 0.088 x 0.190 NOM (2.24 x 4.83 NOM).

357 Beloit Street, P.O. Box 457, Burlington, WI 53105-0457 U.S.A.
Phone: 262-763-3591 Fax: 262-763-2881 Email: nelsales@nelfc.com www.nelfc.com

Differential Positive ECL (DPECL)

SR-A29B0 Series *Rev G*

Frequency Range: 250.0 MHz-1.7 GHz

Operating Conditions and Output Characteristics

Electrical Characteristics

Parameter	Symbol	Conditions	Min	Typical	Max
Frequency	—	—	250.0MHz	—	1.7GHz
Duty Cycle	—	@ 50% points	45/55%	—	55/45%
Logic 0 (1)	V_{OL}	—	V_{CC} -1.810V	—	V_{CC} -1.620V
Logic 1 (1)	V_{OH}	—	V_{CC} -1.025V	—	V_{CC} -0.880V
Rise & Fall Time	t_r, t_f	20-80%V_O with 50 ohm load to V_{CC} -2V	—	350 psec	600 psec
RMS Random Jitter(5)	—	—	—	—	1 psec
Enable Voltage(2)	—	with V_{EE}=0V	0V	—	1.0V
Disable Voltage	—	with V_{EE}=0V	3.0V	—	V_{CC}
Frequency Stability(3)	dF/F	Overall conditions including: voltage, calibration, temp., 10 yr aging, shock, vibration	-100ppm	—	+100ppm
Phase Noise(4)	—	@100Hz	—	—	-80 dBc/Hz
	—	@1kHz	—	—	-115 dBc/Hz
	—	@10kHz	—	—	-130 dBc/Hz
	—	@100kHz	—	—	-130 dBc/Hz
	—	@1MHz	—	—	-135 dBc/Hz
	—	@10MHz	—	—	-135 dBc/Hz

General Characteristics

Parameter	Symbol	Conditions	Min	Typical	Max
Supply Voltage	V_{CC}	—	3.135 V	3.3 V	3.465 V
Supply Current	I_{CC}	50 ohm termination to 2.00V below V_{CC}	0.0 mA	—	120 mA
Output Current	I_O	Low level Output Current	0.0 mA	—	±50.0 mA
Operating Temperature	T_A	—	0°C	—	70°C
Storage Temperature	T_S	—	-55°C	—	125°C
Input: Logic High (ECL) - Disables V_{EE} or Open - Enables					
Lead Temperature	T_L	Soldering, 10 sec.	—	—	300°C
Load	50 ohm to V_{CC} -2V or Thevenin Equivalent, Bias Required				
Start-up Time	t_S	—	—	2 ms	10 ms

Environmental and Mechanical Characteristics

Mechanical Shock	Per MIL-STD-202, Method 213, Condition E
Thermal Shock	Per MIL-STD-833, Method 1011, Condition A
Vibration	0.060" double amplitude 10 Hz to 55 Hz, 35g's 55 Hz to 2000 Hz
Soldering Condition	300°C for 10 seconds

Footnotes:

1) V_{OL}, V_{OH}, referenced to ground.
2) Open to enable pin also enables the output.
3) Standard frequency stability (others available).
4) Phase Noise characterization available. Phase Noise is frequency dependent, phase noise specification references a 1.0GHz part.
5) RMS jitter bandwidth of 12kHz to 20MHz.