Elektronische Bauelemente

SQ2131

CMOS Positive Voltage Regulator

RoHS Compliant Product

Description

The SQ2131 is a fixed 1.2V of positive, linear regulators feature low quiescent current (60μA typ.) with low dropout voltage, making them ideal for battery applications. These rugged devices have both Thermal Shutdown, and Current Fold-back to prevent device failure under the "Worst" of operating conditions. An additional feature is a "Power Good" detector, which pulls low when the output is out of regulation. The SQ2131 is stable with an output capacitance of 2.2μF or greater.

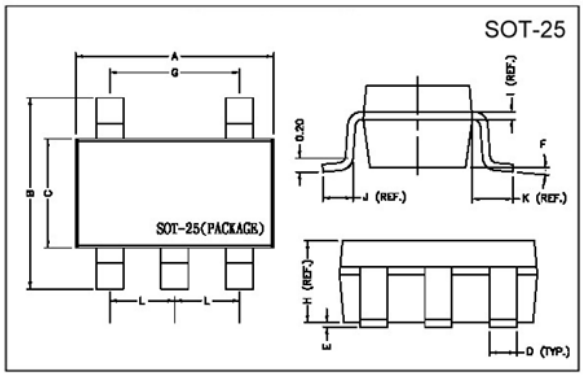

REF.	Millimeter		REF.	Dimensions
	Min.	Max.		Millimeter
A	2.70	3.10	G	1.90 REF.
B	2.60	3.00	H	1.20 REF.
C	1.40	1.80	I	0.12 REF.
D	0.30	0.55	J	0.37 REF.
E	0	0.10	K	0.60 REF.
F	0°	10°	L	0.95 REF.

Features

* High Accurate ± 3.0%
* Over-Temperature Shutdown
* Power Good Output Function
* Very Low Dropout Voltage
* Low Temperature Coefficient
* Short Circuit Current Fold-back
* Guaranteed 150mA output
* Current Limiting
* Power-Saving Shutdown Mode

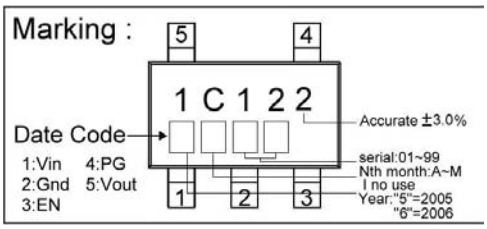

Applications

* PC Peripherals
* Wireless Devices
* Portable Electronics
* Battery Powered Widgets
* Electronic Scales
* Instrumentation
* Cordless Phones

Functional Block Diagram

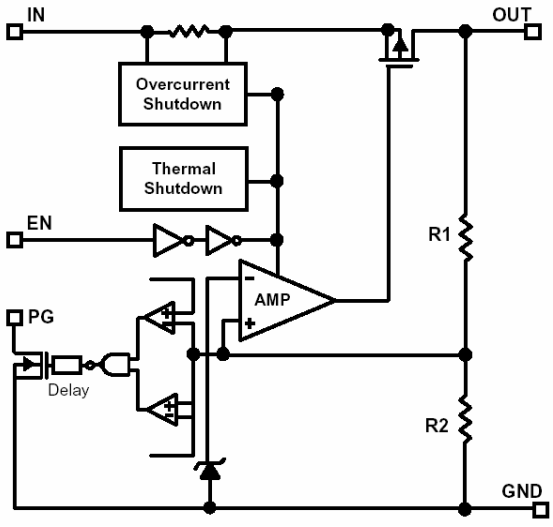

Typical Application Circuit

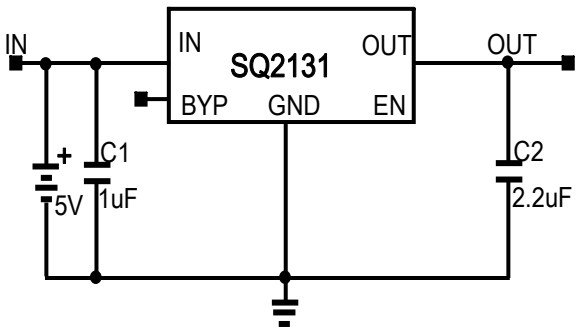

Fig 1. Typical Application Schematic

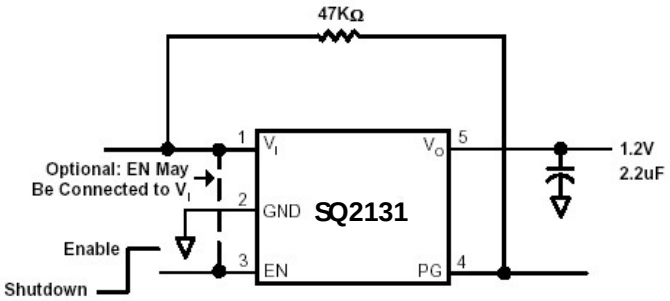

Fig 2. Typical Application For Processor VID Code Power Sequencing Schematic

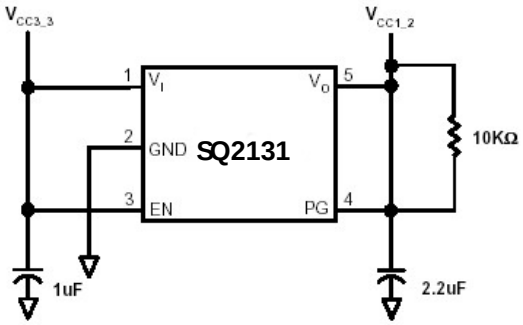

Pin Description

Pin Number	Pin Name	Pin Function
1	V_{IN}	Supply Input
2	Gnd	Ground
3	EN	Enable/Shutdown (Input): CMOS Compatible Input Logic High= Enable; Logic Low= Shutdown. Do Not Leave Open
4	PG	Power Good Output
5	V_{OUT}	Regulator Output

Ordering Information(contd.)

Part Number	Marking	Output Voltage	Part Number	Marking	Output Voltage
SQ2131-12	1C122 XXXX	1.2V			

Detailed Description

The SQ2131 of COMS regulators contain a PMOS pass transistor,voltage reference, error amplifier,over-current protection and thermal shutdown and Power Good function. The P-channel pass transistor receives data from the error amplifier,over-current shutdown, and thermal protection circuits. During normal operation, the error amplifier compares the output voltage to a precision reference. Over-current and Thermal shutdown circuits become active when the junction temperature exceeds150^{o}C,or the current exceeds 300mA. During thermal shutdown, the output voltage remains low. Normal operation is restored when the junction temperature drops below 120°C· The SQ2131 switches from voltage mode to current mode when the load exceeds the rated output current. This prevents over-stress. The SQ2131 also incorporates current fold-back to reduce power dissipation when the output is short circuited.This feature becomes active when the output drops below 0.8 volts, and reduces the current flow by 65%. Full current is restored when the voltage exceeds 0.8 volts.

External Capacitors

The SQ2131 is stable with an output capacitance to ground of 2.2uF or greater. Ceramic capacitors have the lowest ESR, and will offer the best AC performance. Conversely, Aluminum Elertrolytic capacitors exhibit the highest ESR, resulting in the poorest AC response. Unfortunately, large value ceramic capacitors are comparatively expensive. One option is to parallel a 0.1 uF ceramic capacitor with a 10 uF Aluminum Electrolytic. The benefit is low ESR, high capacitance, and low overall cost. A second capacitor is recommended between the input and ground to stabilize Vin. The input capacitor should be at least 0.1uF to have a beneficial effect. All capacitors should be placed in close proximity to the pins. A "Quiet" ground termination is desirable . The can be achieved with a "Star" connection.

Enable

The Enable pin normally floats high. When actively, pulled low, the PMOS pass transistor shuts off, and all internal circuits are powered down. In this state, the quiescent current is less than 1uA. This pin behaves much like an electronic switch.

Power Good

The SQ2131 includes the Power Good feature.When the output is not within ±15% of the specified voltage, it pulls low. This can occur under the following conditions: 1. Input Votage Too Low. 2. During Over-Temperature. 3. During Over-Current. 1. If Output Is Pulled Up. (Note: PG pin is an open-drain output.)

Absolute Maximum Ratings

Parameter	Symbol	Ratings	Unit
Input Voltage	V_{IN}	7	V
Output Current	I_{OUT}	$P_D/(V_{IN}-V_O)$	mA
Iutput,Output Voltage		GND-0.3 to V_{IN}+0.3	V
Operating Ambient Temperature	Topr	-40~+85	°C
Junction Temperature	Tj	-40~+125	°C
Max. Junction Temperature	Tj Max.	150	°C
Thermal Resistance	θja	260	°C/W
Power Dissipation (△ T=100°C)	P_D	380	mW
EDS Classification		B	

Electrical Characteristics Ta=25°C V_{IN}=2.7v, V_{EN}=V_{IN},I_O=100uA unless otherwise noted

Parameter	Symbol	Min.	Typ.	Max.	Unit	Condition	
Output Voltage	V_O	-3.0%	–	3.0%	V	Io=0.1mA	
Current Limit	I_{LIM}	150	350	–	mA	Vo<0.1V	
Load Regulation	REG_{LOAD}	-4	1	4	%	Io=0.1mA to 150mA	
Dropout Voltage	$V_{DROPOUT}$	–	–	1300	mV	Io=150mA,V_{OUT}=Vo-2%	
Quiescent Current	I_Q	–	60	80	uA	V_{IN}=6V,Io=0mA,Vo=$Vo_{(NOM)}$	
Ground Pin Current	I_{GND}	–	65	–	uA	V_{IN}=6V,Io=1mA to 150mA	
Line Regulation	REG_{LINE}	- 0.3	–	0.3	%	Io=0.1mA,V_{IN}=2.7V to 6V	
Input Voltage	V_{IN}	2.7	–	6	V		
Over Temperature Shutdown	O_{TS}	–	150	–	°C		
Over Temperature Hystersis	O_{TH}	–	30	–	°C		
Output Voltage Temperature Coefficient	T_C	–	30	–	ppm/°C		
PG Leakage Current	I_{LC}	–	0.1	–	uA	V_{PG}=6V,PG is off	
PG Voltage Low	V_{OL}	–	–	0.1	V	I_{SINK}=0.1mA	
V_{PG} Delay	T_{PGD}	1.5	–	5	ms	See Timing Diagram on Page 5	
Power Supply Rejection	PSRR	–	50	–	dB	f=1kHz	Io=100mA Co=2.2uF
		–	20	–		f=10kHz	
		–	15	–		f=100Hz	
Output Voltage Noise	eN	–	30	–	uVrms	Co=2.2uF	f=10Hz~100kHz Io=10mA
Output Under Voltage	V_{UV}	–	–	95	$\%V_{O(NOM)}$	PG ON @ % of V_{OUT}	
EN Input Threshold	V_{EH}	1.6	–	V_{IN}	V		
	V_{EL}	0	–	0.4			
EN Input Bias Current	I_{EH}	–	0.1	–	uA	V_{EN}=V_{IN}	
	I_{EL}	–	0.1	–		V_{EN}=0V	
Shutdown Supply Current	I_{SD}	–	0.5	1	uA	V_{IN}=5V,Vo=0V,V_{EN}=0V	
Shutdown Output Voltage	$Vo,_{SD}$	0	–	0.4	V	Output Loading ≤1200Ω,V_{EN}=0V	

*Note1: $V_{IN(MIN)}$=V_{OUT}+$V_{DROPOUT}$

Characteristics Curve

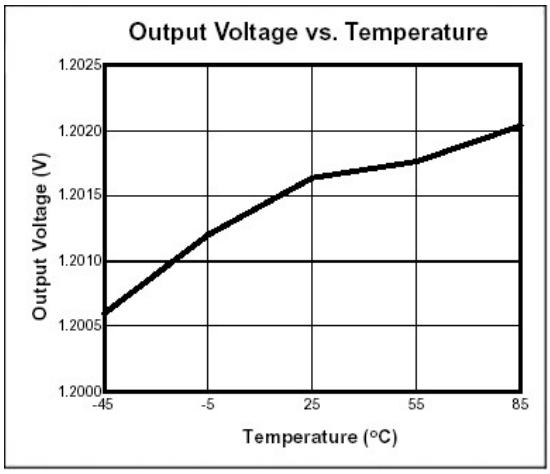

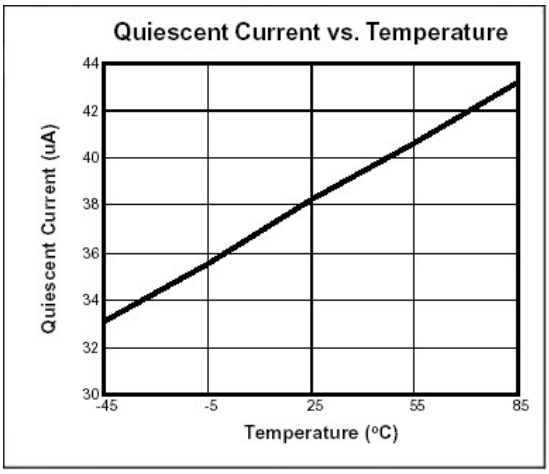

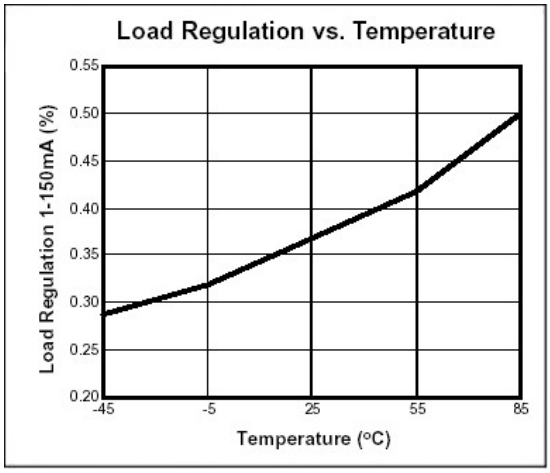

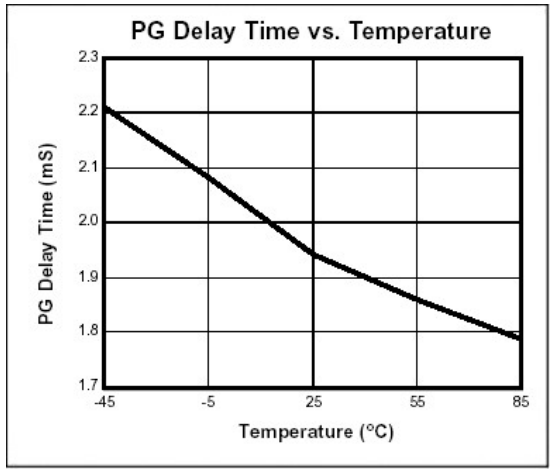

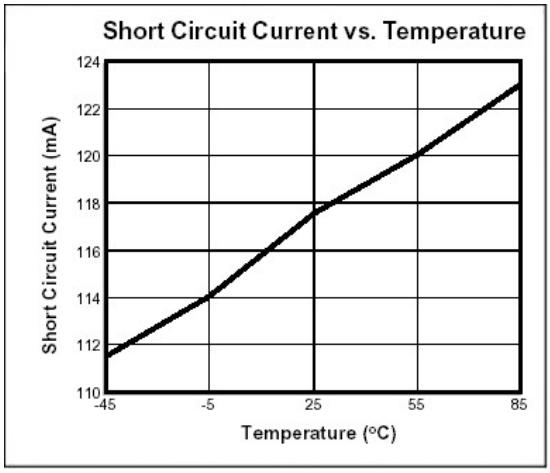

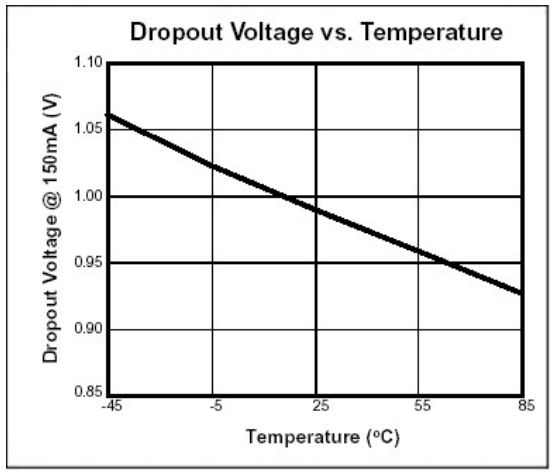

Timing Diagram

