DATASHEET

SQ-XLD

MEMS ACCELEROMETER

2 & 3 AXIS, SERIAL OUTPUT, CALIBRATED, 1.7 G, 5 G, 16 G, 35 G, 50 G, 70 G

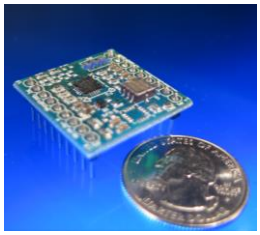
SQ-XLD-2X

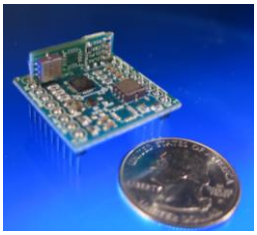
SQ-XLD-3X

FUNCTION

- Miniature, low-cost, serial accelerometer
- Real-time data acquisition performance using a low cost serial cable
- Simple menu-driven PC configuration of sampling parameters
- Adjustable sample rate and filtering in software

APPLICATIONS

- Low cost data acquisition
- Real time system monitoring
- Motion, tilt, shock and vibration analysis
- Industrial process control

FEATURES

- ± 1.7 g to ±70g models available
- 2.5% accuracy, factory calibrated
- 2 or 3 axis models
- 10 Hz to 1 kHz sampling
- 10 to 13 bit resolution
- DC through 1 kHz bandwidth
- Direct PC interface cable

DESCRIPTION

The acceleration sensor module performs calibrated acceleration measurement with digital serial output. Using a USB or RS232 interface cable (sold separately), it functions as a self-contained data acquisition system for 2 axis or 3 axis acceleration, tilt, and vibration measurement.

The PC data acquisition interface software called SignalVIEW is written in the popular LabVIEW visual programming language. This offers an easy, menu-driven data acquisition PC interface. The user can configure various parameters of the sensor such as sample rate, and digital filter parameters. More advanced functions such as post processing, analysis, and algorithm prototyping can be added directly into the console source code. By coupling real-time data acquisition with real- time graphical display and signal processing, the SQ-XLD series accelerometer makes an ideal platform for real time monitoring or prototyping accelerometer systems.

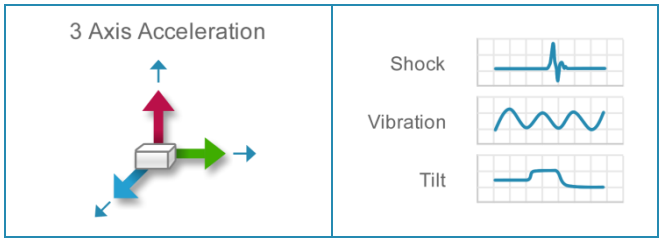


USB to TTL Cable
(RS232 version available)

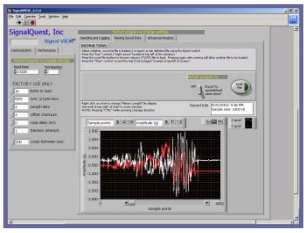
SignalVIEW software

© SignalQuest, LLC 2014
10 Water St.
Lebanon, NH 03766 USA
Tel: 603.448.6266
Fax 603.218.6426
www.signalquest.com
info@signalquest.com

TABLE OF CONTENTS

Description....1
Function....1
Features....1
Applications....1
Absolute Maximum Ratings....3
Electrical Characteristics....3
Electrical Characteristics....3
Pin Configuration....4
SQ-XLD 2 Axis Packages....5
Dimensions....5
SQ-XLD 2 Axis Package....6
Dimensions....6
Design, Layout, and Assembly Considerations....7
Reset Sources....7
Serial Interface....8
SignalVIEW Software Basic....11
Ordering Guide....13
Accessories....13
Limitations and Warnings....14
Testing....14
System Integration Testing....14

© SignalQuest, LLC 2014
10 Water St.
Lebanon, NH 03766 USA
Tel: 603.448.6266
Fax 603.218.6426
www.signalquest.com
info@signalquest.com

ABSOLUTE MAXIMUM RATINGS

PARAMETER	MIN	TYPICAL	MAX	NOTES
Voltage on +*Vcc*	0.3 V		5.8 V	with respect to GND
Voltage on any input pin			5.8 V	with respect to GND
Peak-to-peak supply noise			200 mV	
Operating temperature	-40 º C		85 º C	
Shock survivability			500 *g*	where 1 *g* is assumed to be = 9.81 m/s^2

Note: Exposure to conditions outside of the Absolute Maximum Ratings may damage the device. Prolonged exposure to conditions at the Absolute Maximum Ratings may result in degraded performance of the device over time.

ELECTRICAL CHARACTERISTICS

[Test conditions: 3.3v regulator, 25 º C unless otherwise specified]

PARAMETER	MIN	TYPICAL	MAX	NOTES
Supply voltage	3.5 V		5.8 V	with respect to GND
Supply current	1.6 mA		6.0 mA	
Input voltage High	2.0 V			
Input voltage Low			0.8 V	
Output voltage High	0.895 × *Vcc*		*Vcc*	
Output voltage Low	0 V		0.100 × *Vcc*	

PERFORMANCE CHARACTERISTICS

[Test conditions: 3.3v regulator, 25 º C unless otherwise specified]

PARAMETER	MIN	NOTES
Acceleration range**	±1.5 g to ±50 g	with respect to GND
Accelerometer resolution**		
Alignment accuracy	± 2º	
Sample rate	1000 Hz	
Accelerometer bandwidth	DC – 1 KHz	(configurable from 10 Hz to 1 KHz in software using moving average)
Serial communication	115,200 baud	
Temperature sensitivity	**	

**Available using various Analog Device accelerometers including ADXL203, ADXL103, ADXL320, ADXL330, ADXL210, ADXL78, and ADXL278 please visit www.analog.com for more information.

© SignalQuest, LLC 2014
10 Water St.
Lebanon, NH 03766 USA
Tel: 603.448.6266
Fax 603.218.6426
www.signalquest.com
info@signalquest.com

PIN CONFIGURATION

PIN	SIGNAL NAME	USAGE
1	Ground	
2	UART Transmit	Digital Output – UART transmit line. Push-pull (not open collector). If not used, solder to open circuit for mechanical stability. **Do not** connect to GND or current drain will increase.
3	UART Receive	Digital Input – UART receive line. If not used, **solder to V+.**
4	NC	Solder to open circuit for mechanical stability. **Do not** connect to GND
5	+Vcc Supply	
6	NC	Solder to open circuit for mechanical stability. **Do not** connect to GND
7	NC	Solder to open circuit for mechanical stability. **Do not** connect to GND
8	NC	Solder to open circuit for mechanical stability. **Do not** connect to GND
9	NC	Solder to open circuit for mechanical stability. **Do not** connect to GND
10	NC	Solder to open circuit for mechanical stability. **Do not** connect to GND.
11	NC	Solder to open circuit for mechanical stability. **Do not** connect to GND
12	NC	Solder to open circuit for mechanical stability. **Do not** connect to GND
13	NC	Solder to open circuit for mechanical stability. **Do not** connect to GND
14	NC	Solder to open circuit for mechanical stability. **Do not** connect to GND
15	/Reset & Prog 1	Digital Input – Active low reset. Bring low for >10 mS to reset device. If not used, solder to open circuit for mechanical stability. **Do not** connect to GND. Also used for FLASH programming.
16	Prog 2	Digital Input – If not used, solder to open circuit for mechanical stability. **Do not** connect to GND. Also used for FLASH programming.
17	NC	Solder to open circuit for mechanical stability. **Do not** connect to GND
18	NC	Solder to open circuit for mechanical stability. **Do not** connect to GND

***Note:** Grey boxes indicate a function is available only on a custom application basis. NC means “no connection”.

© SignalQuest, LLC 2014
10 Water St.
Lebanon, NH 03766 USA
Tel: 603.448.6266
Fax 603.218.6426
www.signalquest.com
info@signalquest.com

DATASHEET

SQ-XLD

MEMS ACCELEROMETER

2 & 3 AXIS, SERIAL OUTPUT, CALIBRATED, 1.7 G, 5 G, 16 G, 35 G, 50 G, 70 G

SQ-XLD 2 AXIS PACKAGES

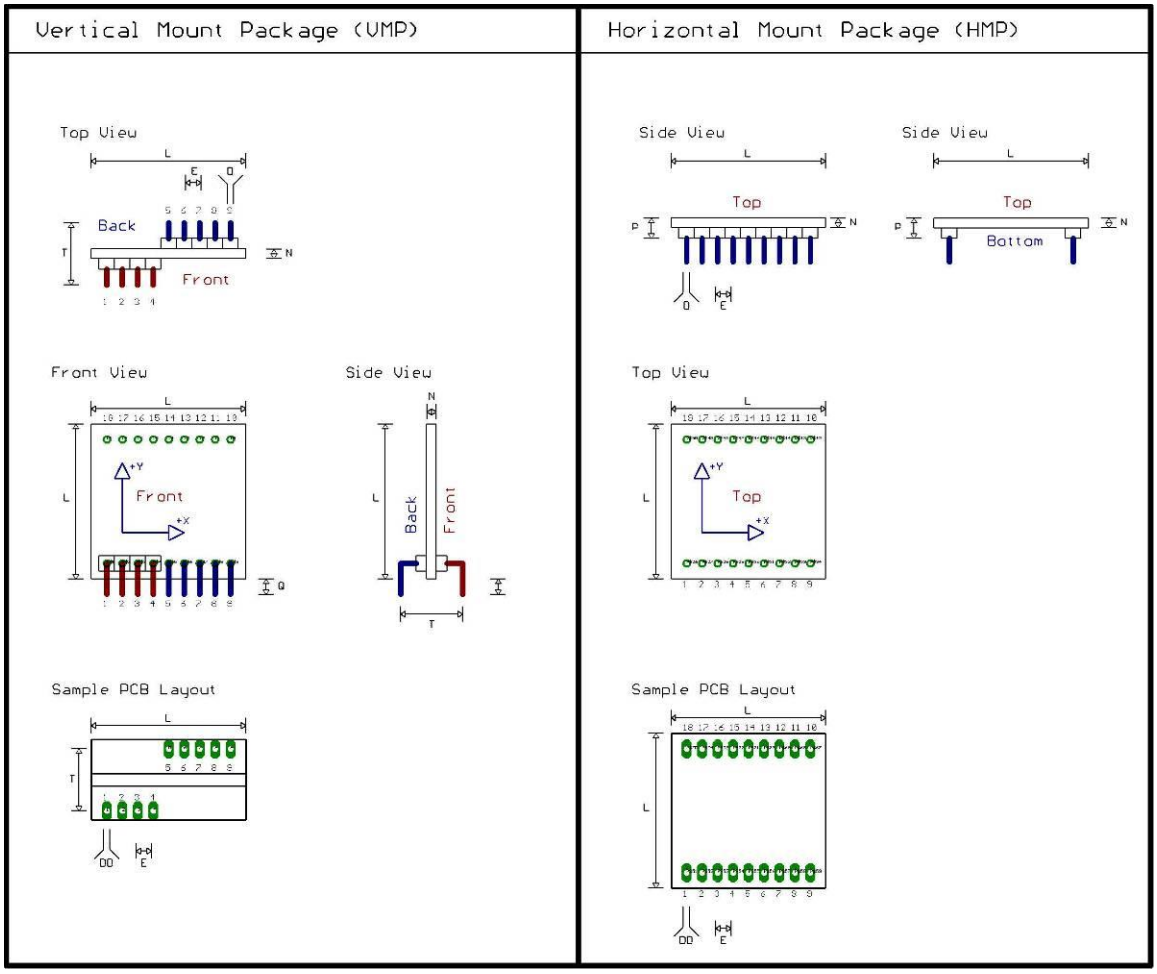

DIMENSIONS

DIMENSION	MILLIMETERS	INCHES	DESCRIPTION	NOTES
T	10.16	0.40	N/A	Pin center to center
L	25.40	1.00	Side length	
E	2.54	0.10	Pitch	Pin center to center
D	0.80	0.032	Pin diameter	
DD	1.00	0.040	Hole diameter	
N	1.63	0.064	PCB thickness	
S	20.32	0.80	Pin row spacing	Not shown on drawing

© SignalQuest, LLC 2014

10 Water St.
Lebanon, NH 03766 USA
Tel: 603.448.6266
Fax 603.218.6426
www.signalquest.com
info@signalquest.com

SQ-XLD 3 AXIS PACKAGE

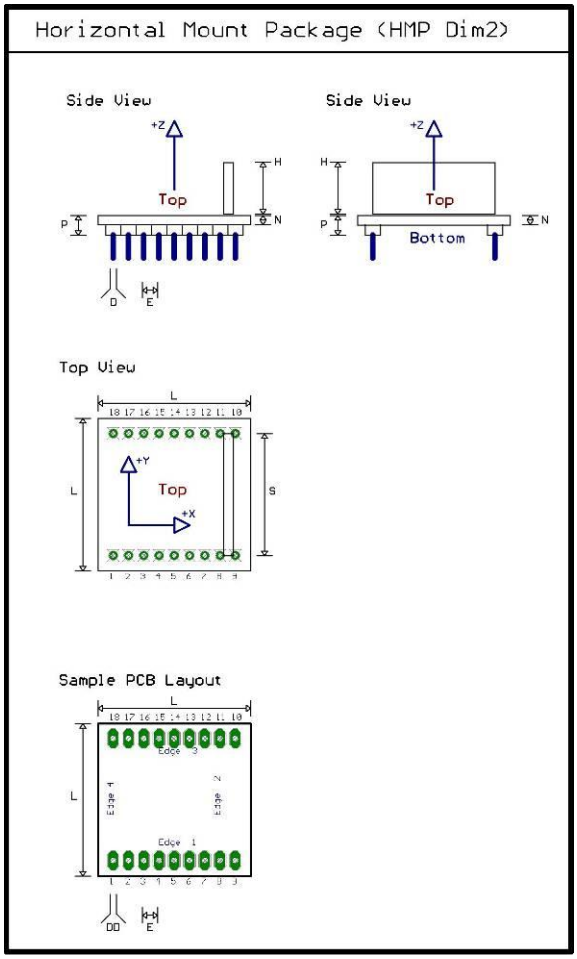

DIMENSIONS

DIMENSION	MILLIMETERS	INCHES	DESCRIPTION	NOTES
T	10.16	0.40	N/A	Pin center to center
L	25.40	1.00	Side length	
E	2.54	0.10	Pitch	Pin center to center
D	0.80	0.032	Pin diameter	
DD	1.00	0.040	Hole diameter	
N	1.63	0.064	PCB thickness	
H	8.64	0.34	Ortho board height	
P	3.30	0.13	N/A	
S	20.32	0.80	Pin row spacing	Same as ortho board width

© SignalQuest, LLC 2014
10 Water St.
Lebanon, NH 03766 USA
Tel: 603.448.6266
Fax 603.218.6426
www.signalquest.com
info@signalquest.com

DESIGN, LAYOUT, AND ASSEMBLY CONSIDERATIONS

1. Since the device is a subassembly of surface mount components, it is not suitable for automatic assembly or wave soldering.
2. Hand soldering of pins or SMT pads is specified for 3 seconds at 218 ºC.
3. Pins labeled NC (no connect) should be soldered to open connection pads / pins for mechanical stability.
4. The designer should test the device's output voltage through its entire desired angle range during prototyping to ensure that it is working properly in the application.
5. The device can be mounted vertically or horizontally, but the direction must be oriented correctly to measure the desired angles.
6. It is recommended that pins designated "future" be connected for forward compatibility.

RESET SOURCES

Power-on Reset and RST pin

When the inclinometer is disconnected from power it reverts to its default settings in Interrogate Mode. It transmits 1 data packet [10 bytes] after its Warm Up time to indicate that measurements are stabilized.

© SignalQuest, LLC 2014
10 Water St.
Lebanon, NH 03766 USA
Tel: 603.448.6266
Fax 603.218.6426
www.signalquest.com
info@signalquest.com

SERIAL INTERFACE

A single command can set most commonly-used functions of the device. This is done by sending a new Command Byte to the device. The lower 7 bits (BIT6 through BIT0) are orthogonal, and hence, have no effect on one another. They can be combined together by adding bits to form single command. All Orthogonal Commands have the Special Function Bit (BIT7) set to 0.

After each data packet is transmitted, the device returns to its minimum current state until another command is received.

UART FORMAT: 8-N-1

8 data bits, 1 stop bit, no parity, no flow control: 115,200 baud

One byte commands can be sent from the host to control various functions of the device. The following commands can be sent to the devices via the UART. The data encoding is HEX, not ASCII.

FILTER CONTROL

A digital moving average filter can be enabled with lengths of 2, 10, or 100 points. This feature is useful in reducing noise and improving resolution with little or no impact on power consumption. Each time the device acquires a data point, this moving average is updated. Switching the moving average setting causes the entire filter to be initialized with the first new data value. The time constant of the filter depends on the speed at which samples are requested by the host.

SPECIAL FUNCTION COMMAND OVERVIEW

All Special Function Commands have the Special Function Bit (BIT7) set to 1. The lower bits of any Command Byte sent to the device are ignored when a Special Function Command is used.

TIMING

New commands should not be sent from the host faster than Sample Rate to avoid overwriting previous commands. The recommend method to ensure that this does not occur is to send commands in Interrogate Mode and then wait for the response packet before issuing a new command.

RESET SOURCES

Grounding the device's power pin for 200 mS will reset the device. When the device is powered on, it will revert to its default settings. On power up, a single measurement is taken and a single data packet is transmitted. Alternatively, the Reset Command may be used to force a reset.

© SignalQuest, LLC 2014
10 Water St.
Lebanon, NH 03766 USA
Tel: 603.448.6266
Fax 603.218.6426
www.signalquest.com
info@signalquest.com

COMMAND BYTE

BITS	USE	BINARY	HEX	COMMAND	RESPONSE	NOTES
Bit[7]	Special Commands	1000 0011	0x83	Reset	Device reset	**Example: Acquire 1 packet as fast as possible –** Combine Interrogate Mode (0x01) and Average 0 (0x00). To do this, send 0x01. The response will be 1 data packet after a delay of 1/Sample Rate seconds. **Example: Stream packets with a 10 point moving average –** Combine Stream Mode (0x02) and Average 10 (0x08). To do this, send 0x0A (formed by adding 0x02 + 0x08). The response will be 1 data packet after a delay of 1/(10*Sample Rate) seconds.
Bit[6]	Reserved for future use	01xx xxx	0x40	Reserved for future use	Undefined	
		00xx xxx	NA	Reserved for future use	Undefined	
Bits[5:4]	Reserved for future use	0x11 xxxx	0x30	Reserved for future use	Undefined	
		0x10 xxxx	0x20	Reserved for future use	Undefined	
		0x01 xxxx	0x10	Reserved for future use	Undefined	
		0x00 xxxx	NA	Reserved for future use	Undefined	
Bits[3:2]	Filter Control	0xxx 11xx	0x0C	Average 100	Moving average length set to 100 points	
		0xxx 10xx	0x08	Average 10	Moving average length set to 10 points	
		0xxx 01xx	0x04	Average 2	Moving average length set to 2 points	
		0xxx 00xx	NA	Average 0 (default)	No moving average filtering	
Bits[1:0]	Output Control	0xxx xx11	0x03	Reserved for future use	Undefined	
		0xxx xx10	0x02	Stream Mode	Replies by streaming packets at Sample Rate / Average Control packets per second	
		0xxx xx01	0x01	Interrogate Mode (default)	Replies with single data packet	
		0xxx xx00	0x00	Reserved for future use	Undefined	

© SignalQuest, LLC 2014
10 Water St.
Lebanon, NH 03766 USA
Tel: 603.448.6266
Fax 603.218.6426
www.signalquest.com
info@signalquest.com

SERIAL PACKET FORMAT

	BYTE	DESCRIPTION	NOTES
Header	0	Sync byte 1	0xFE
	1	Sync byte 2	0xFE
Payload	2	X Acceleration (high byte)	Format: 16-bit, signed integer. Output_Value = Acceleration (g)*1000. For example, a measured acceleration of 0.851 g results in an output value of 851. If no Z axis is present, the values are undefined.
	3	X Acceleration (low byte)	
	4	Y Acceleration (high byte)	
	5	Y Acceleration (low byte)	
	6	Z Acceleration (high byte)	
	7	Z Acceleration (low byte)	
Checksum	8	Checksum (high)	Format: 16-bit, unsigned integer sum of the 16 bit unsigned integer payload values. The checksum **does not** include the two sync bytes (0xFE 0xFE).
	9	Checksum (low)	

© SignalQuest, LLC 2014
10 Water St.
Lebanon, NH 03766 USA
Tel: 603.448.6266
Fax 603.218.6426
www.signalquest.com
info@signalquest.com

SIGNALVIEW SOFTWARE BASIC

OVERVIEW

- The SignalVIEW software is designed to be used with SignalQuest's SQ-XLD series products
- The easy to use, LabVIEW interface provides a real-time interface for the data acquisition system.
- Allows users to configure sampling parameters, view and analyze data, save waveforms, and export data values to a spreadsheet or text editor.

SAMPLING AND LOGGING

- This area provides the interface for capturing data from the SQ-XLD device.
- Select effective sample rate and ports.
- Access additional tools to zoom, pan, and change history length.

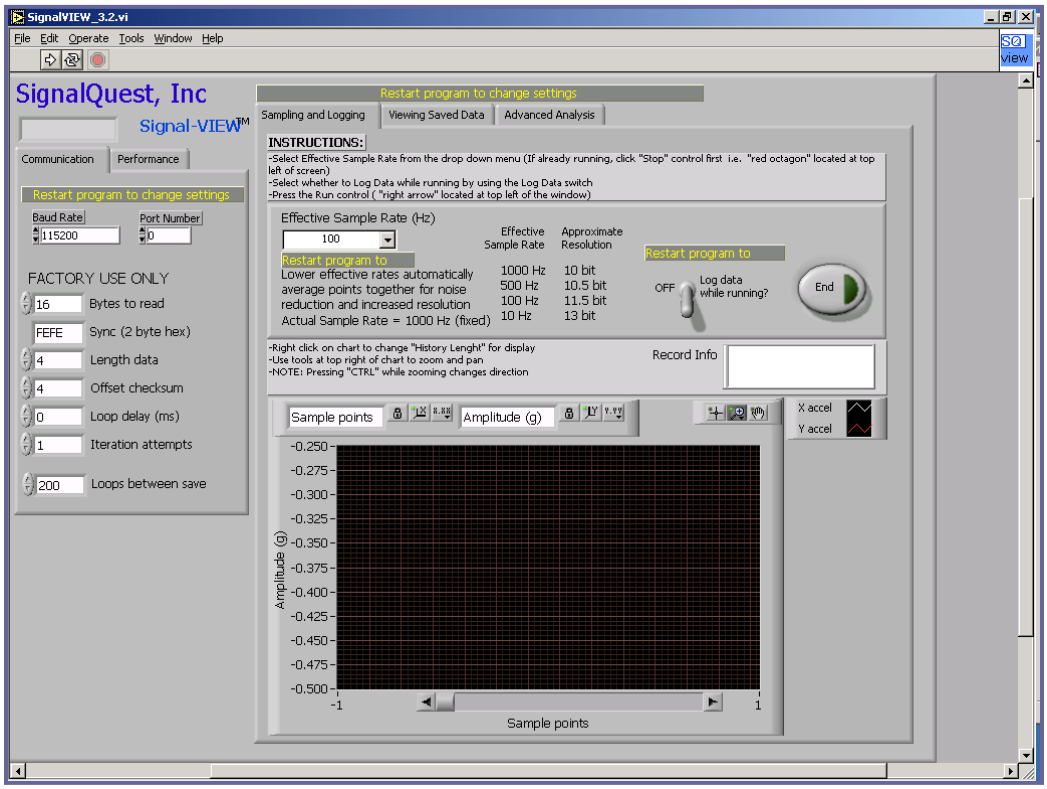

© SignalQuest, LLC 2014
10 Water St.
Lebanon, NH 03766 USA
Tel: 603.448.6266
Fax 603.218.6426
www.signalquest.com
info@signalquest.com

VIEWING SAVED DATA

- This area provides the interface for viewing and analyzing saved data
- Data values can be exported to a spreadsheet or text editor or saved as a waveform for future analysis.
- Access additional tools to zoom, pan, and change history length.

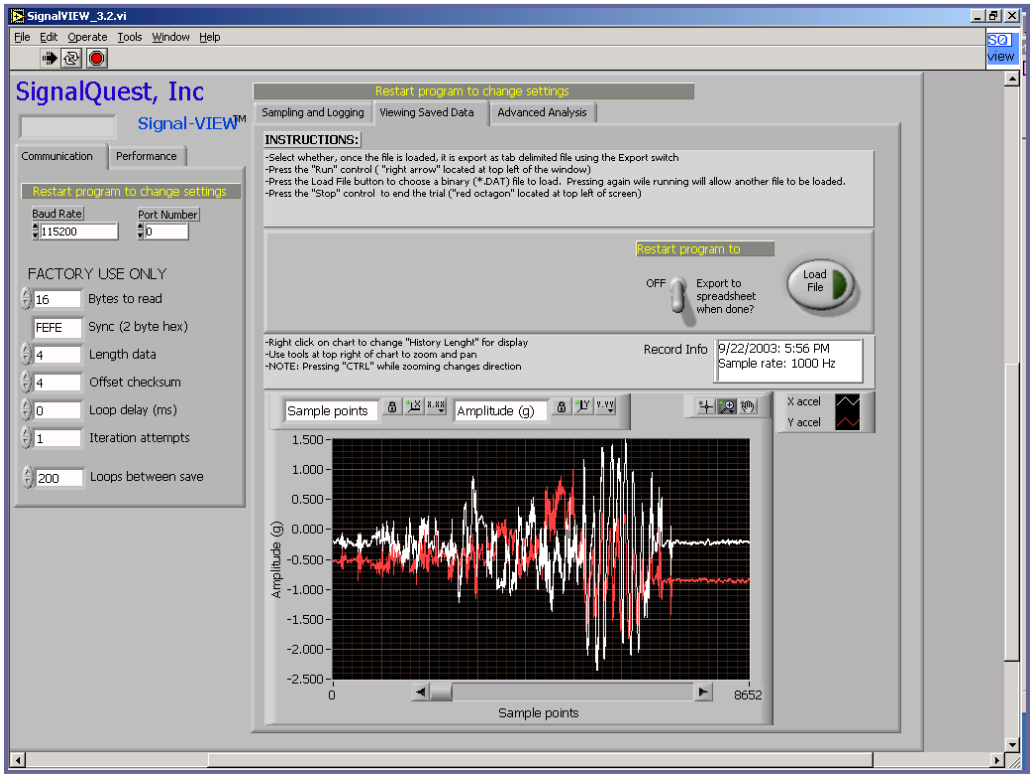

© SignalQuest, LLC 2014
10 Water St.
Lebanon, NH 03766 USA
Tel: 603.448.6266
Fax 603.218.6426
www.signalquest.com
info@signalquest.com

ORDERING GUIDE

OPTIONS	CODE	OPTION	NOTES
Axes	-2X	2 axis	
	-3X	3 axis	
Range	-1.7G	1.7 g	
	-5.0G	5 g	Special order only.
	-16G	16 g	Special order only.
	-35G	35 g	Special order only.
	-50G	50 g	Special order only.
	-70G	70 g	Special order only.
Package Options	-NP	No pins	2 axis version fits inside potting box enclosures (SQ-ENCL-1). 3 axis version requires 2 potting boxes.
	-HMP	Horizontal mount pins	
RoHS (lead free)	-E	RoHS complaint, lead free	
Other option	-Custom	Customer-specific requirements	Please contact SignalQuest if you require an option not listed in this table. For example, various baud rates, setting times, update rates and voltage regulator options may be available on request.

EXAMPLE PART NUMBER

SQ-XLD-2X-1.7G-NP

ACCESSORIES

PART NUMBER	DESCRIPTION
SQ-USB2-TTL	▪ Self-powering USB cable used to directly connect device to a PC. ▪ Installs a "virtual COM port" on host PC (i.e. COM 3). ▪ Converts PC voltage levels to device voltage levels and supplies power. ▪ Allows multiple devices to be easily connected to a single computer. ▪ Compatible with SignalVIEW real time display and data logging software. ▪ DLL provide for custom application development in VC++, C#, or VB etc.
SQ-RS232-TTL	▪ Same as above cable, but external power is required for devices without –LP option.
SQ-ENCL-1	▪ Potting box enclosure. Potting box enclosure. Fits models without pins installed (-NP option). Order one if using SQ-XLD-2X family or two if ordering SQ-XLD-3X family.

© SignalQuest, LLC 2014
10 Water St.
Lebanon, NH 03766 USA
Tel: 603.448.6266
Fax 603.218.6426
www.signalquest.com
info@signalquest.com

LIMITATIONS AND WARNINGS

LIFE SAFETY

This product is not designed for use in life support and/or safety equipment where malfunction of the product can reasonably be expected to result in personal injury or death. Buyer uses this product in such applications at Buyer's own risk and agrees to defend, indemnify, and hold harmless SignalQuest, LLC from any and all damages, claims, suits, or expenses resulting from such misuse.

DYNAMIC ENVIRONMENTS

The device is designed to be used to measure angles in a quasi-static environment where external vibrations and accelerations are kept to a minimum. Digital and analog signal processing methods are employed to reduce the effects of transient acceleration and small vibrations on the angle reading; however, under dynamic conditions where external accelerations or vibrations are present, the sensor's performance may be degraded.

VARIATIONS IN EARTH'S GRAVITY

This device is designed to be used near the earth's surface only. Substantial changes in gravity will degrade the performance of the sensor. This device is not intended or qualified to be used in aviation.

TESTING

The performance of each system is verified through build-time testing. Each system is tested before and after factory calibration to ensure reliable performance.

SYSTEM INTEGRATION TESTING

Thorough testing should be carried out prior to product release to insure system integration has not introduced unforeseen problems. The system integrator assumes the ultimate responsibility for the safety of the target application.

NOTICE

Information furnished by SignalQuest, Inc is believed to be accurate and reliable. However, this document may contain ERRORS and OMMISIONS. Accordingly, the design engineer should use this document as a reference rather than a strict design guideline and should perform thorough testing of any product that incorporates this or any other SignalQuest product. No responsibility is assumed by SignalQuest, LLC for the use of this information, or for any infringements of patents or other rights of third parties that may result from its use. Specifications are subject to change without notice. No license is granted by implication or otherwise under any patent or patent rights of SignalQuest, LLC Trademarks and registered trademarks are the property of their respective companies.

FURTHER INFORMATION

For pricing, delivery, and ordering information, please contact SignalQuest at (603) 448-6266
For updates on this and other documents, visit our website at www.signalquest.com

© SignalQuest, LLC 2014
10 Water St.
Lebanon, NH 03766 USA
Tel: 603.448.6266
Fax 603.218.6426
www.signalquest.com
info@signalquest.com