SPX4040

Precision Micropower 2.5V Shunt Voltage Reference

FEATURES
- Low temperature coefficient 100 ppm/°C
- Operating current range 100µA to 15 mA
- Low power, 250 mW @ Iin=100 mA
- Two terminal "Zener" operation
- Small package: SOT - 23, TO-92, and SO-8
- Fixed reverse breakdown voltage 2.5 Volt
- No output capacitance required
- Similar replacement for LM4040

APPLICATIONS
- Constant Current Source
- Digital Voltmeter
- Power Supply Monitor
- Precision Regulators
- Battery-Powered Equipment
- Instrumentation
- Automotive Electronics
- Data Acquisition Systems
- Energy Management

PRODUCT DESCRIPTION
The SPX4040 is a two-terminal, temperature compensated, band-gap voltage reference, which provides a fixed 2.5V output for input currents between 100 µA to 15mA. The bandgap voltage (2.5V) is independently trimmed from the output voltage to achieve a very low tempco. This trimming technique process gives a very stable device over the full temperature range (A grade 50 ppm/ °C). The SPX4040 is available in the sub-miniature (3mm × 1.3mm) SOT-23, SO-8 surface mount package, or TO-92 package. The operating temperature is -40°C to 85°C.

The SPX4040 advanced design eliminates the need for an external stabilized capacitor while insuring stability with any capacitive load, making them easy to use.

PIN CONNECTIONS

8-Pin Surface Mount (S)

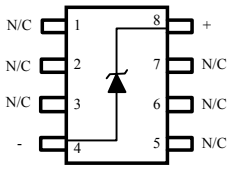

Top View

SOT-23-3 (M)

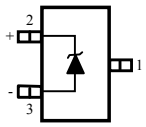

Top View

TO-92 (N)

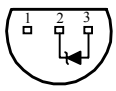

Bottom View

ABSOLUTE MAXIMUM RATINGS

Reverse Current 20mA
Forward Current 10mA
Storage Temperature ..... -65°C to +150°C
Lead Temperature (Soldering) ..... 300°C

Power Dissipation at 25°C
M Package 300mW
N Package 550mW
S Package 525mW
Temperature Range ..... -40°C ≤ T_A ≤ +85°C

ELECTRICAL CHARACTERISTICS (SPX4040-2.5V)

Electrical Characteristics at I_{IN} = 1000µA, and T_A = +25°C unless otherwise noted. . **Boldface limits apply over temperature**

Parameters	Conditions	SPX4040A2 Min	SPX4040A2 Typ	SPX4040A2 Max	SPX4040B2 Min	SPX4040B2 Typ	SPX4040B2 Max	Units
Reverse Breakdown Voltage	I_R=500 µA		2.500			2.500		V
Reverse Breakdown Tolerance	I_R=500 µA			±25 **±49**			±25 **±49**	mV mV
Output Impedance			0.60	2		0.60	2	Ω
Noise Voltage	0.1KHz≤f ≤10Hz		15			15		µV p-p
Tempco	Note 1			50			100	ppm/°C
Turn-on Setting	0.1% of V_{OUT}		30			30		µSec
Operating Current Range	Note 2	0.1		15	0.1		15	mA
Temp. Range		-40		85	-40		85	°C

Parameters	Conditions	SPX4040A3 Min	SPX4040A3 Typ	SPX4040A3 Max	SPX4040B3 Min	SPX4040B3 Typ	SPX4040B3 Max	Units
Reverse Breakdown Voltage	I_R=500 µA		2.500			2.500		V
Reverse Breakdown Tolerance	I_R=500 µA			±50 **±74**			±50 **±74**	mV mV
Output Impedance			0.60	2		0.60	2	Ω
Noise Voltage	0.1KHz≤f ≤10Hz		15			15		µV p-p
Tempco	Note 1			50			100	ppm/°C
Turn-on Setting	0.1% of V_{OUT}		30			30		µSec
Operating Current Range	Note 2	0.1		15	0.1		15	mA
Temp. Range		-40		85	-40		85	°C

ELECTRICAL CHARACTERISTICS (SPX4040-5.0V)

Electrical Characteristics at I_{IN} = 1000µA, and T_A = +25°C unless otherwise noted. . **Boldface limits apply over temperature**

Parameters	Conditions	SPX4040A2 Min	SPX4040A2 Typ	SPX4040A2 Max	SPX4040B2 Min	SPX4040B2 Typ	SPX4040B2 Max	Units
Reverse Breakdown Voltage	I_R=500 µA		5.000			5.000		V
Reverse Breakdown Tolerance	I_R=500 µA			±50 **±98**			±50 **±98**	mV mV
Output Impedance			0.60	2		0.60	2	Ω
Noise Voltage	0.1KHz≤f ≤10Hz		15			15		µV p-p
Tempco	Note 1			50			100	ppm/°C
Turn-on Setting	0.1% of V_{OUT}		30			30		µSec
Operating Current Range	Note 2	0.175		15	0.175		15	mA
Temp. Range		-40		85	-40		85	°C
Parameters	**Conditions**	**SPX4040A3 Min**	**SPX4040A3 Typ**	**SPX4040A3 Max**	**SPX4040B3 Min**	**SPX4040B3 Typ**	**SPX4040B3 Max**	**Units**
Reverse Breakdown Voltage	I_R=500 µA		5.000			5.000		V
Reverse Breakdown Tolerance	I_R=500 µA			±100 **±148**			±100 **±148**	mV mV
Output Impedance			0.60	2		0.60	2	Ω
Noise Voltage	0.1KHz≤f ≤10Hz		15			15		µV p-p
Tempco	Note 1			50			100	ppm/°C
Turn-on Setting	0.1% of V_{OUT}		30			30		µSec
Operating Current Range	Note 2	0.175		15	0.175		15	mA
Temp. Range		-40		85	-40		85	°C

Note: 1) Three-point measurement guarantees the error band over the specified temperature range.
2) Optimum performance is obtained at currents below 1000 µA.
3) Limits are 100% production tested at 25°C. Limits over temperature are guaranteed through correlation using statistical quality control.

SPX4040 Applications Hints

This device is designed for stable operation and has no need of an external capacitor between pin 4 and 8. The reference remains stable if a bypass capacitor is used.

SOT-23

The SPX4040 in the SOT-23 package has a parasitic Schottky diode between pin 3 and pin 1. Pin 1 of SOT-23 must float or be connected to pin 3.

Conventional Shunt Regulator

In a conventional shunt regulator application (see Figure 1), an external series resister (R_S) is connected between the supply voltage and the SPX4040. R_S determines the current that flows through the load (I_L) and the reference(I_Q). Since load current and supply voltage may vary, R_S should be small enough to supply at least the minimum acceptable I_Q to the reference even when the supply voltage is at its minimum and the load current is at its maximum value. When the supply voltage is at its maximum and I_L is at its minimum, R_S should be large enough so that the current flowing through the SPX4040 is less than 15mA

R_S is determined by the supply voltage (V_S), the load and operating current (I_L and I_Q), reference's reverse breakdown voltage (V_R).

$$R_S = (V_S - V_R)/(I_L+I_Q)$$

Figure 1. SPX4040 Fixed Shunt Regulator Application

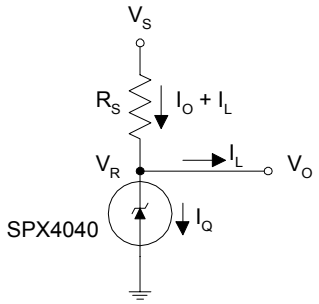

PACKAGE DRAWING
8-PIN SOIC (S)

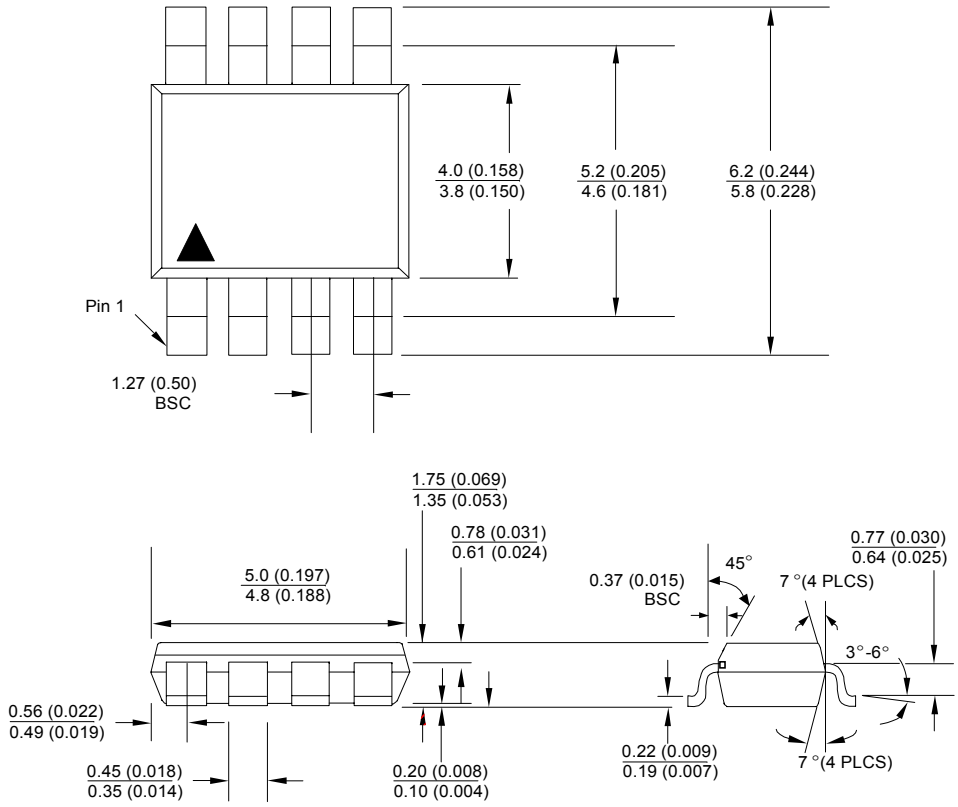

DRAWING PACKAGE
SOT-23-3L (M)

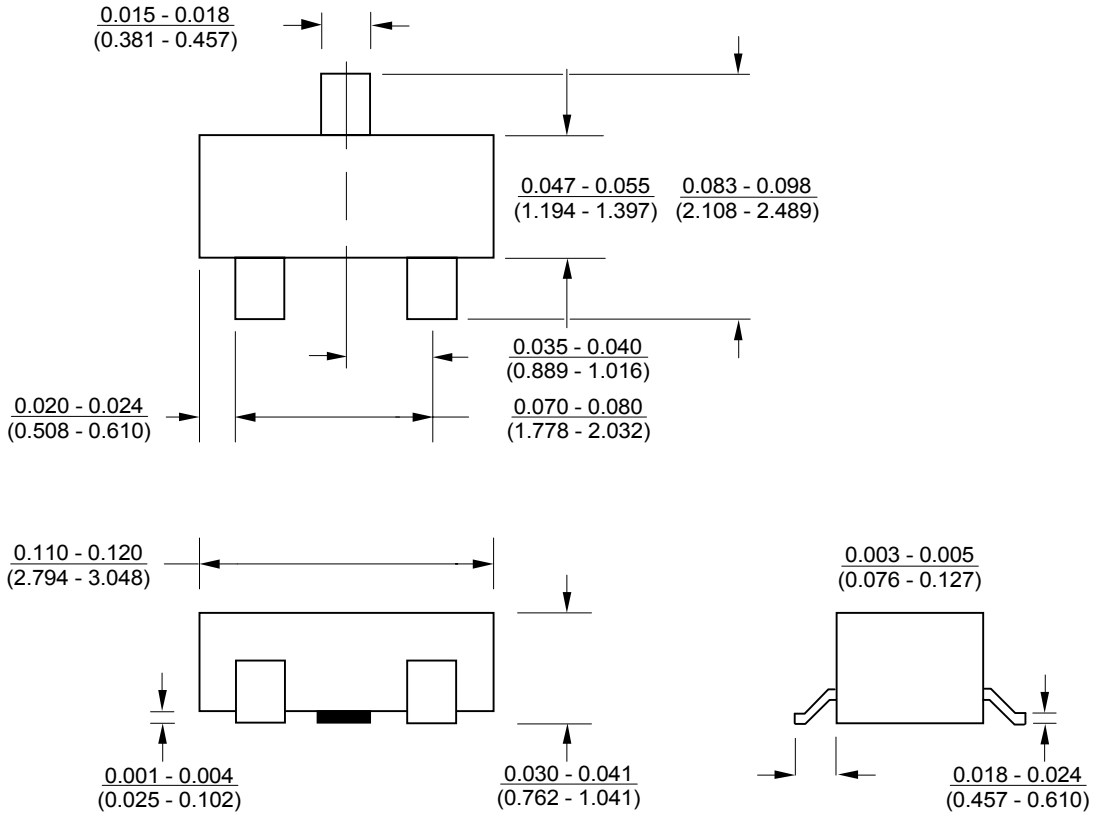

PACKAGE DRAWING
TO-92 (N)

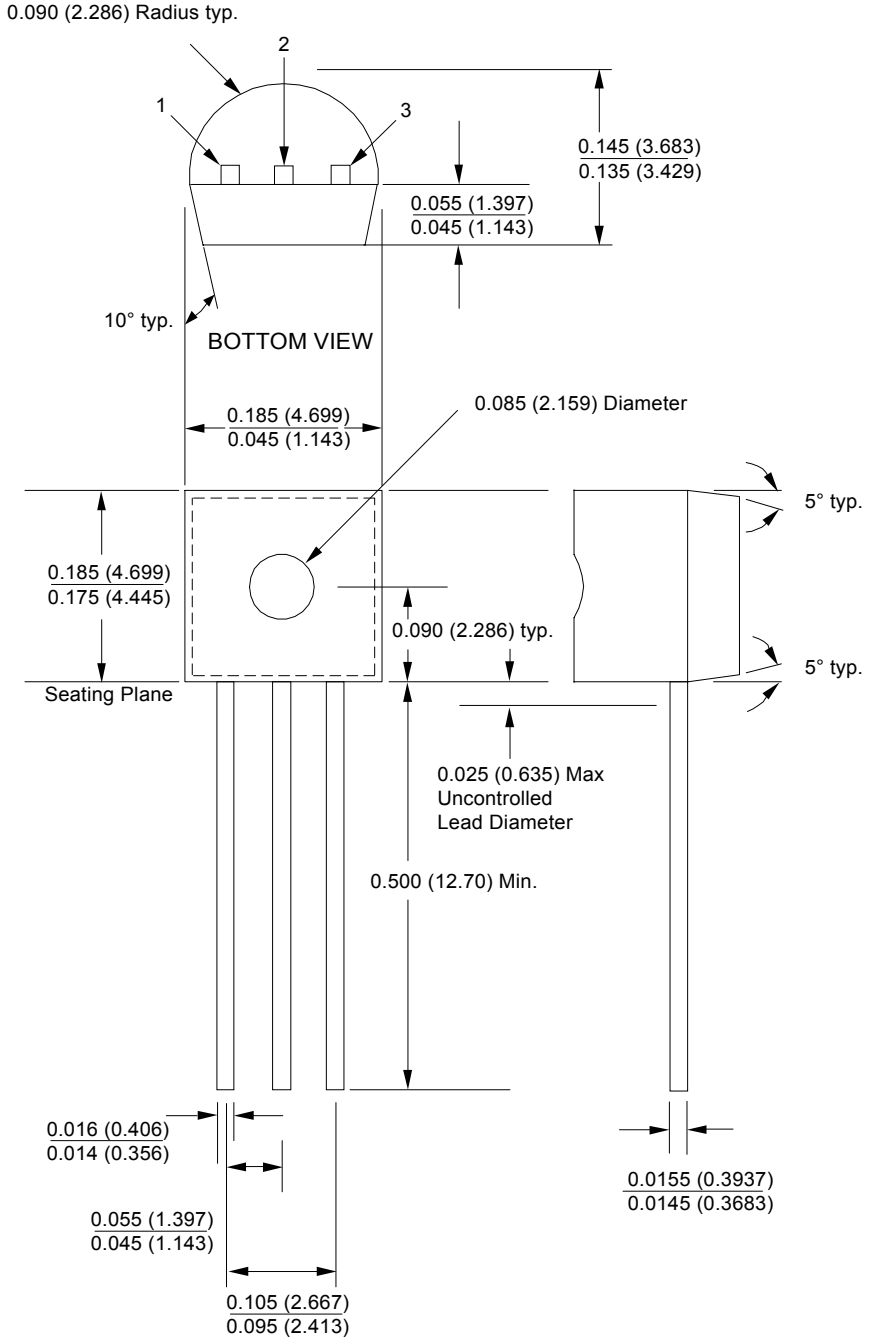

ORDERING INFORMATION

Ordering No.	Temp Coef	Output Accuracy	Reverse Breakdown Voltage	Packages
SPX4040A2N-2.5	100ppm	1%	2.5V	3 Lead TO-92
SPX4040A2N-5.0	100ppm	1%	5.0V	3 Lead TO-92
SPX4040B2N-2.5	150ppm	1%	2.5V	3 Lead TO-92
SPX4040B2N-5.0	150ppm	1%	5.0V	3 Lead TO-92
SPX4040A3N-2.5	100ppm	2%	2.5V	3 Lead TO-92
SPX4040A3N-5.0	100ppm	2%	5.0V	3 Lead TO-92
SPX4040B3N-2.5	150ppm	2%	2.5V	3 Lead TO-92
SPX4040B3N-5.0	150ppm	2%	5.0V	3 Lead TO-92
SPX4040A2S-2.5	100ppm	1%	2.5V	8 Lead SOIC
SPX4040A2S-5.0	100ppm	1%	5.0V	8 Lead SOIC
SPX4040B2S-2.5	150ppm	1%	2.5V	8 Lead SOIC
SPX4040B2S-5.0	150ppm	1%	5.0V	8 Lead SOIC
SPX4040A3S-2.5	100ppm	2%	2.5V	8 Lead SOIC
SPX4040A3S-5.0	100ppm	2%	5.0V	8 Lead SOIC
SPX4040B3S-2.5	150ppm	2%	2.5V	8 Lead SOIC
SPX4040B3S-5.0	150ppm	2%	5.0V	8 Lead SOIC
SPX4040A2M-2.5	100ppm	1%	2.5V	3 Lead SOT-23
SPX4040A2M-5.0	100ppm	1%	5.0V	3 Lead SOT-23
SPX4040B2M-2.5	150ppm	1%	2.5V	3 Lead SOT-23
SPX4040B2M-5.0	150ppm	1%	5.0V	3 Lead SOT-23
SPX4040A3M-2.5	100ppm	2%	2.5V	3 Lead SOT-23
SPX4040A3M-5.0	100ppm	2%	5.0V	3 Lead SOT-23
SPX4040B3M-2.5	150ppm	2%	2.5V	3 Lead SOT-23
SPX4040B3M-5.0	150ppm	2%	5.0V	3 Lead SOT-23

Sipex Corporation

SIGNAL PROCESSING EXCELLENCE

Sipex Corporation

Headquarters and Main Offices:
22 Linnell Circle
Billerica, MA 01821
TEL: (978) 667-8700
FAX: (978) 670-9001
e-mail: sales@sipex.com

233 South Hillview Drive
Milpitas, CA 95035
TEL: (408) 935-7600
FAX: (408) 934-7500

Sipex Corporation reserves the right to make changes to any products described herein. Sipex does not assume any liability arising out of the application or use of any product or circuit described hereing; neither does it convey any license under its patent rights nor the rights of others.