SPV1040

High efficiency solar battery charger with embedded MPPT

Features

- 0.3 V to 5.5 V operating input voltage
- 140 mΩ internal synchronous rectifier
- 120 mΩ internal power active switch
- 100 kHz fixed PWM frequency
- Duty cycle controlled by MPPT algorithm
- Output voltage regulation, overcurrent and overtemperature protection
- Input source reverse polarity protection
- Built-in soft-start
- Up to 95% efficiency
- 3 mm x 4.4 mm TSSOP8 package

Applications

- Smart phones and GPS systems
- Wireless headsets
- Small appliances, sensors
- Portable media players
- Digital still cameras
- Toys and portable healthcare

Description

The SPV1040 device is a low power, low voltage, monolithic step-up converter with an input voltage range from 0.3 V to 5.5 V, and is capable of maximizing the energy generated by even a single solar cell (or fuel cell), where low input voltage handling capability is extremely important.

Thanks to the embedded MPPT algorithm, even under varying environmental conditions (such as irradiation, dirt, temperature) the SPV1040 offers maximum efficiency in terms of power harvested from the cells and transferred to the output.

The device employs an input voltage regulation loop, which fixes the charging battery voltage via a resistor divider. The maximum output current is set with a current sense resistor according to charging current requirements.

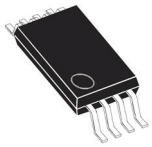

TSSOP8

The SPV1040 protects itself and other application devices by stopping the PWM switching if either the maximum current threshold (up to 1.8 A) is reached or the maximum temperature limit (up to 155 °C) is exceeded.

An additional built-in feature of the SPV1040 is the input source reverse polarity protection, which prevents damage in case of reverse connection of the solar panel at the input.

Table 1. Device summary

Order codes	Package	Packaging
SPV1040T	TSSOP8	Tube
SPV1040TTR		Tape and reel

Contents

1 **Block diagram** 3

2 **Pin description** 4

3 **Maximum ratings** 5

3.1 Absolute maximum ratings 5

3.2 Thermal data 5

4 **Electrical characteristics** 6

5 **Typical characteristics** 8

6 **Detailed description** 10

6.1 Soft-start mode 10

6.2 Startup mode 10

6.3 MPPT mode 10

6.4 Constant voltage regulation 10

6.5 Constant current regulation 11

6.6 Overcurrent protection (OVC) 11

6.7 Overtemperature protection (OVT) 11

6.8 Shutdown mode 11

6.9 Undervoltage lockout (UVLO) 11

6.10 Reverse polarity 11

6.11 Burst mode 12

6.12 Sleep-IN mode 12

7 **Package mechanical data** 13

8 **Revision history** 14

1 Block diagram

Figure 1. Block diagram

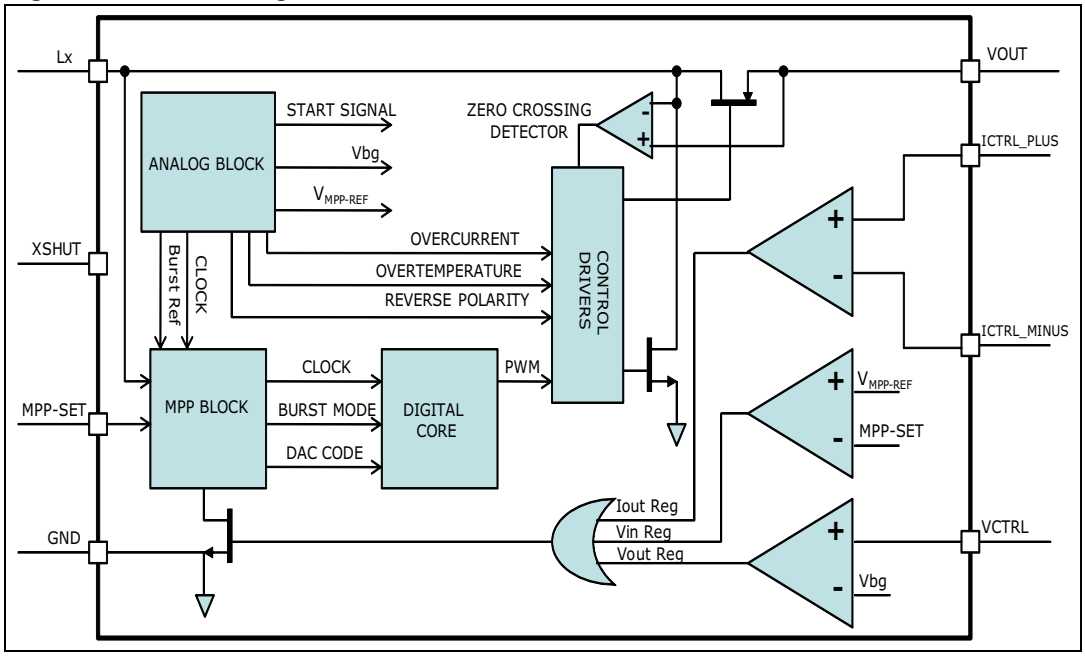

Figure 2. Simplified application circuit

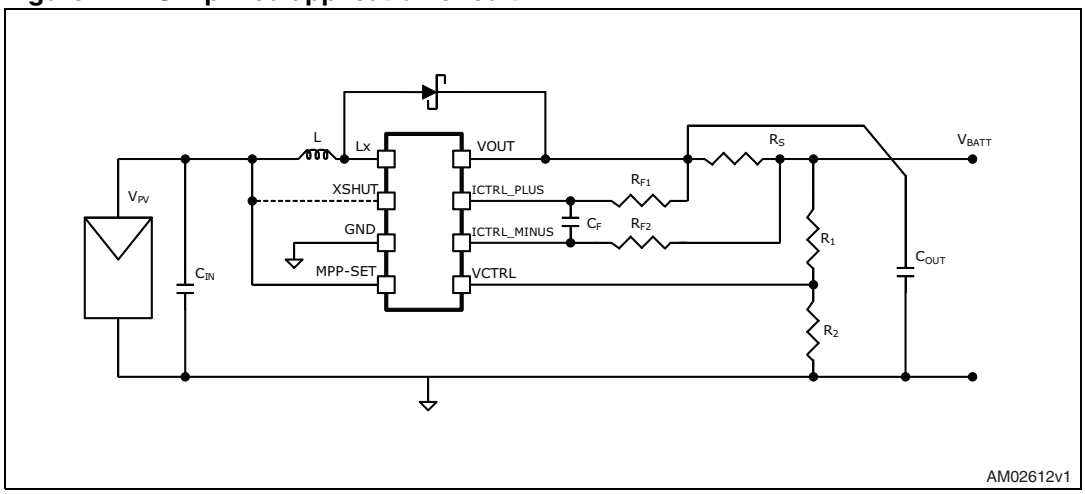

For setting up the application and simulating the related test results please go to www.st.com/edesignstudio

2 Pin description

Table 2. Pin description

Pin	Name	Type	Description
1	MPP-SET	I	Non-inverting input to sense the PV cell voltage. It cannot be left floating.
2	GND	Ground	Power ground reference.
8	XSHUT	I	Shutdown input pin: XSHUT = LOW: device in *Power Off* mode XSHUT = HIGH: device enabled for *Operating* mode This pin cannot be left floating.
3	LX	I	Booster inductor connection.
7	ICTRL_PLUS	I	Non-inverting input of constant current control loop. It cannot be left floating.
6	ICTRL_MINUS	I	Inverting input of constant current control loop. It cannot be left floating.
5	VCTRL	I	Non-inverting input of constant voltage control loop. It cannot be left floating.
4	VOUT	O	Booster output voltage.

Figure 3. Pin connection (top view)

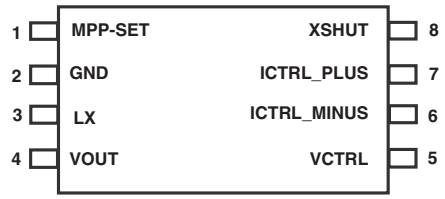

AM02613v1

3 Maximum ratings

3.1 Absolute maximum ratings

Table 3. Absolute maximum ratings

Symbol	Parameter	Range [min, max]	Unit
MPP-SET	Analog input	[-5.5, VOUT]	V
GND	Ground	0	V
XSHUT	Analog input	[-5.5, VOUT]	V
LX	Analog input	[-5.5, VOUT]	V
ICTRL_PLUS	Analog input	[-0.3, VOUT]	V
ICTRL_MINUS	Analog input	[-0.3, VOUT]	V
VCTRL	Analog input	[-0.3, VOUT]	V
VOUT	Analog output	[-0.3, 5.5]	V

3.2 Thermal data

Table 4. TSSOP8 thermal data

Symbol	Parameter	Value	Unit
$R_{th\ j\text{-}amb}$	Thermal resistance, junction-to-ambient	135	°C/W
Tj_{op}	Junction operating temperature	-40 to 125	°C
Tstg	Storage temperature	-40 to 150	°C

Note: R_{thJA} was measured on a 2-layer PCB: FR4, 35 µm Cu thickness, 2.8 cm^2

4 Electrical characteristics

VMPP-SET = 0.5 V, V_{CTRL} = I_{ctrl+} = I_{ctrl-} = GND, XSHUT = 0.5 V, T_J = -40 °C to 125 °C, unless otherwise specified.

Table 5. Electrical characteristics

Symbol	Parameter	Test condition	Min	Typ	Max	Unit
Input source section						
$V_{MPP-SET}$	Low boost voltage threshold	V_{OUT} = 3.3V	0.4	0.45	0.50	V
I_q	Quiescent current	I_{LOAD}=0mA, V_{CTRL}=2V, V_{OUT}=3.3V,		60	80	µA
I_{SD}	Shutdown current	V_{OUT} = 3.3V, V_{CTRL}=2V, I_{LOAD} = 0mA, XSHUT = GND		0.7	5	µA
I_{rev}	Reverse input source current	$V_{MPP-SET}$=-4V, V_{OUT} = 1.5V		1	5	µA
V_{UVLO}	Undervoltage lockout threshold for turn ON @V_{OUT} = 3.3V	$V_{MPP-SET}$ increasing		0.27	0.34	V
	Undervoltage lockout threshold for turn OFF @V_{OUT} = 3.3V	$V_{MPP-SET}$ decreasing	0.14	0.24		V
Power section						
R_{DS_ON-N}	N-channel power switch ON resistance				120	mΩ
R_{DS_ON-P}	P-channel synchronous rectifier ON resistance	V_{CTRL}=2V			140	mΩ
Control section						
$V_{MPPT-THR}$	MPPT-mode threshold	Vout increasing, $V_{MPP-SET}$ = 1.5V	1.7	1.8	2	V
V_{OUT}	Output voltage range	$V_{MPP-SET} \geq$ 1.5V	2		5.2(1)	V
P_{OUT} (2)	Maximum output power	$V_{MPP-SET} \geq$ 1.5V			3	W
I_{Lx}	Maximum inductor current peak		1.5	1.65	1.8	A
F_{PWM}	PWM signal frequency		70	100	130	kHz
V_{REF}	Internal V_{CTRL} reference voltage	$V_{OUT} \geq$ 1.8V, V_{CTRL} increasing	1.2	1.25	1.3	V
V_{Ictrl}	Sensing current offset	I_{CTRL}+ - I_{CTRL}- decreasing	40	50	60	mV
XSHUT	XSHUT logic LOW	XSHUT increasing		0.27	0.34	V
	XSHUT logic HIGH	XSHUT decreasing	0.14	0.24		V

Table 5. Electrical characteristics (continued)

Symbol	Parameter	Test condition	Min	Typ	Max	Unit
Thermal shutdown						
$T_{shutdown}$	Overtemperature threshold for turn OFF	Temperature increasing		155		°C
	Overtemperature threshold for turn ON	Temperature decreasing		130		°C

1. In order to increase the Vout as much as possible up to 5.2 V a Schottky diode must be placed between the Lx and Vout pins, as shown in *Figure 2*.
2. Given $T_j = T_a + R_{thJA} \times P_D$, and assuming $R_{thJA} = 135°C/W$, and that in order to avoid device destruction Tjmax must be ≤ 125 °C, and that in the worst conditions $T_A = 85$ °C, the power dissipated inside the device is given by:

$$P_D \leq \frac{T_j - T_a}{R_{thJA}} = 295\,mW$$

Therefore, if in the worst case the efficiency is assumed to be 90%, then $P_{IN\text{-}MAX} = 3.3$ W and $P_{OUT\text{-}MAX} = 3$ W.

5 Typical characteristics

Figure 4. Efficiency vs output voltage 5 PV Cells - V_{OC} = 2.5 V, V_{MPP} = 2.1 V, L_X = 10 µH

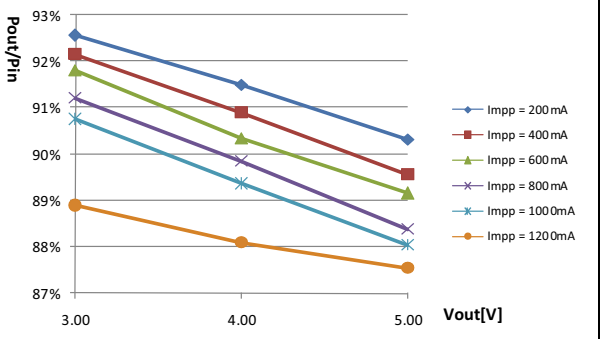

Figure 5. Efficiency vs output voltage 5 PV Cells - V_{OC} = 2.5 V, V_{MPP} = 2.1 V, L_X = 22 µH

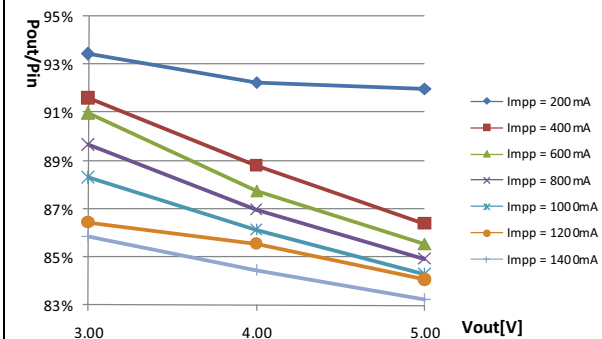

Figure 6. Efficiency vs output voltage 2 PV Cells - V_{OC} = 1 V, L_X = 10 µH

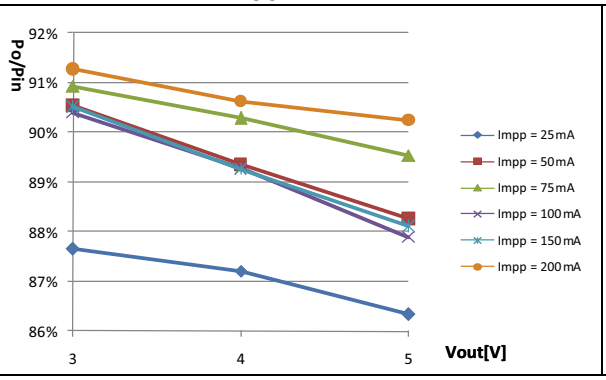

Figure 7. Efficiency vs output voltage 2 PV Cells - V_{OC} = 1 V, L_X = 22 µH

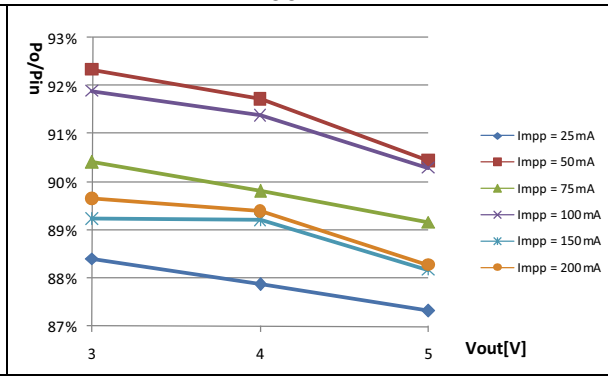

Figure 8. Efficiency vs output voltage 3 PV Cells - V_{OC} = 1.6 V, L_X = 10 µH

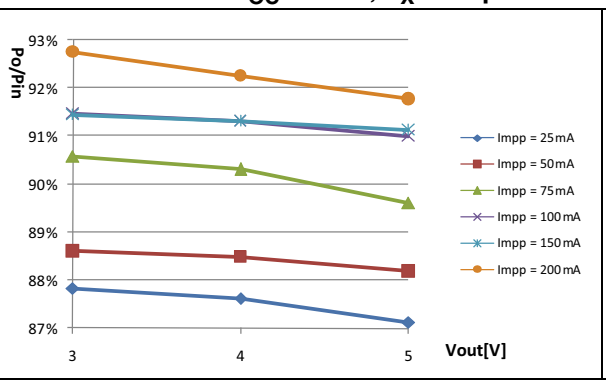

Figure 9. Efficiency vs output voltage 3 PV Cells - V_{OC} = 1.6 V, L_X = 22 µH

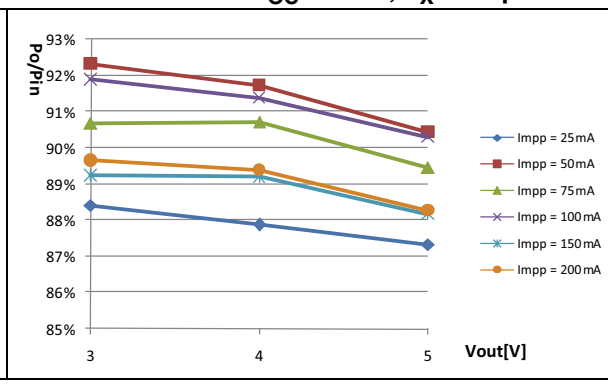

Figure 10. Efficiency vs output voltage 4 PV Cells - V_{OC} = 2.2 V, L_X = 10 µH

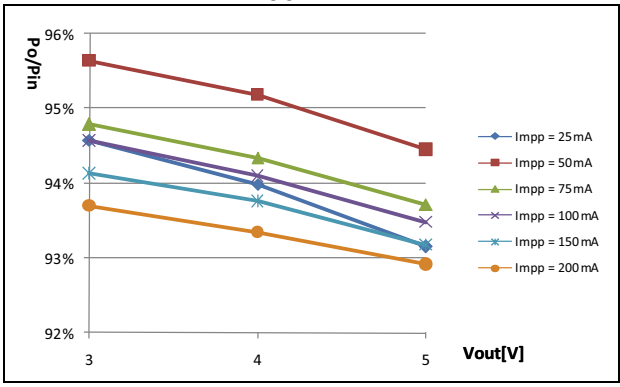

Figure 11. Efficiency vs output voltage 4 PV Cells - V_{OC} = 2.2 V, L_X = 22 µH

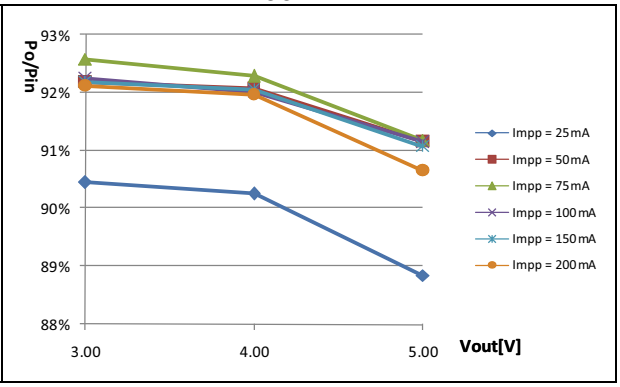

Figure 12. V_{LX} and I_{LX} waveforms - D = 39%

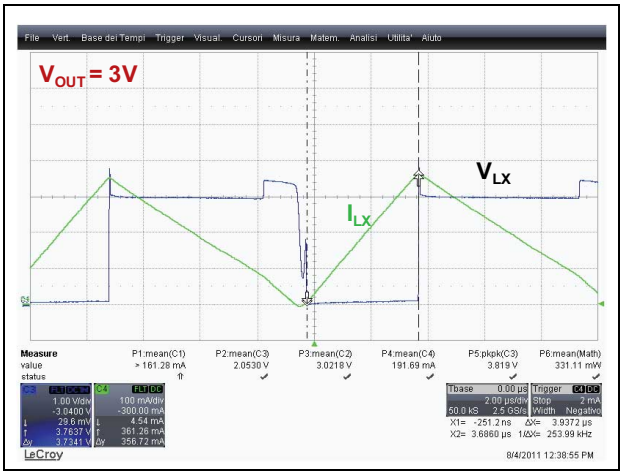

Figure 13. V_{LX} and I_{LX} waveforms - D = 68%

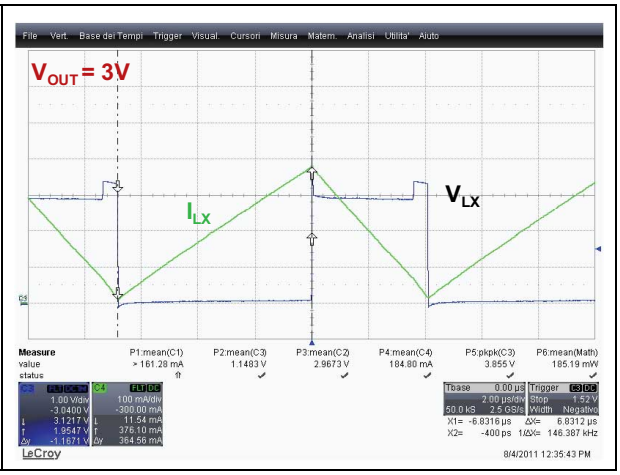

For setting up the application and simulating the related test results please go to www.st.com/edesignstudio

6 Detailed description

The SPV1040 is a monolithic, high efficiency, low voltage, self-powered DC-DC converter that operates over a 0.3 V to 5.5 V DC input voltage range and provides a single output voltage.

The device provides regulated output voltage and current by sensing the VCTRL feedback of the external resistor divider and the voltage drop on the external sense resistor Rs, respectively.

High efficiency is ensured by low power consumption in any working mode and by the embedded *Perturb & Observe* MPPT algorithm.

The SPV1040 guarantees its own safety and application safety by stopping the N-channel power switch in case of overcurrent or overtemperature conditions.

6.1 Soft-start mode

In order to guarantee powerup even when V_{OUT} is very low (battery completely discharged), a proper startup strategy has been implemented.

Taking into account that the device is powered by the V_{OUT} voltage, If V_{OUT} is lower than 0.8 V, the device moves from power off to soft-start mode and the current flows from the input to output through the intrinsic body diode of the synchronous rectifier. In this condition V_{OUT} follows the LX voltage. The IC exits Startup mode when V_{OUT} reaches 0.8 V.

6.2 Startup mode

When V_{OUT} goes above 0.8 V but it is still lower than 2 V, a proper biasing of both MOSFETs is not yet guaranteed. In such conditions, the N-channel power switch is forced ON with a fixed duty cycle and the energy is transferred to the load via the intrinsic body diode of the P-channel synchronous switch. If the shutdown overcurrent limit is exceeded, the power switch is immediately turned OFF. The SPV1040 leaves Startup mode as soon as V_{OUT} goes above 2 V.

6.3 MPPT mode

Once the device has exited Startup mode, the SPV1040 enters MPPT mode to search for the maximum power point. The *Perturb & Observe* algorithm is based on monitoring either the voltage or the current supplied by the DC power source unit so that the PWM signal duty cycle is increased or decreased step by step according to the input power trend. Refer to *Figure 14*, which illustrates the MPPT working principle.

6.4 Constant voltage regulation

The constant voltage control loop consists of an internal voltage reference, an op amp and an external resistor divider that senses the battery voltage and fixes the voltage regulation set-point at the value specified by the user.

6.5 Constant current regulation

The constant current control loop consists of an op amp and an external sense resistor that feeds the current sensing circuit with a voltage proportional to the DC output current. This resistor determines the current regulation set-point and must be adequately rated in terms of power dissipation. It provides the capability to fix the maximum output current to protect the battery.

6.6 Overcurrent protection (OVC)

When the current that flows through the inductor reaches 1.8 A (overcurrent shutdown limit), the N-channel power switch is immediately forced OFF and the P-channel synchronous rectifier is switched ON. Once the overcurrent condition has expired (the inductor current goes below 1.8 A) the N-channel power switch is turned back ON.

6.7 Overtemperature protection (OVT)

When the temperature sensed at silicon level reaches 155 °C (overtemperature shutdown limit), the N-channel power switch is immediately forced OFF and the P-channel synchronous rectifier is switched ON. The device becomes operative again as soon as the silicon temperature goes below 130 °C.

6.8 Shutdown mode

The XSHUT pin low shuts OFF all internal circuitry, achieving the lowest power consumption mode.

6.9 Undervoltage lockout (UVLO)

In order to prevent batteries from over-discharging, the device turns OFF in case of MPP-SET voltage lower than 0.24 V (no irradiation). A hysteresis has been implemented to avoid unpredictable ON-OFF switching.

6.10 Reverse polarity

In order to avoid damage to the device and battery discharge when the solar panel connection is reverse-inserted, a dedicated protection circuit has been implemented. In such condition, the SPV1040 stays OFF until the panel is inserted correctly.

Figure 14. MPPT working principle

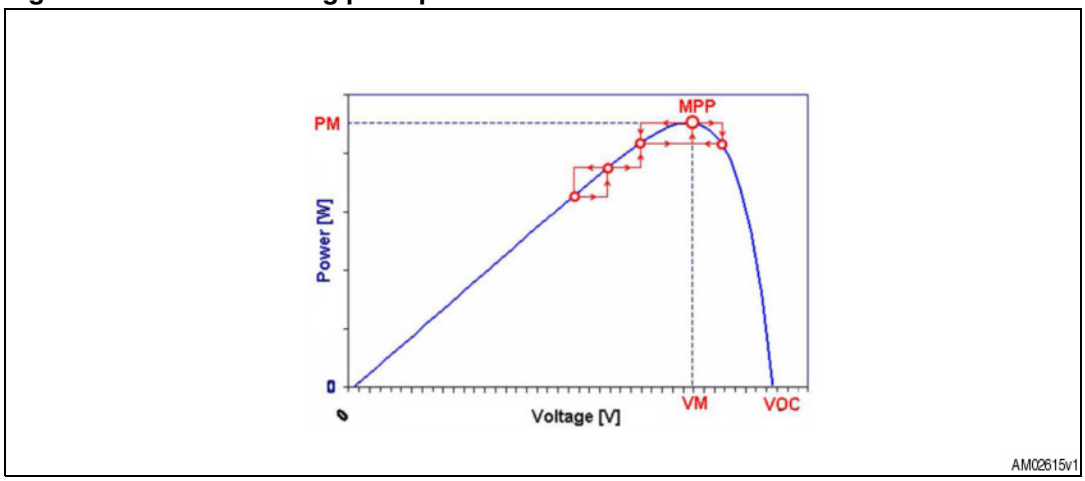

6.11 Burst mode

When the output voltage reaches the battery charge voltage, the MPP-SET voltage drops below 450 mV, or the output current reaches the output maximum current limit, the duty cycle D drops down to 10% and the device evolves from Operating mode to Burst mode. The converter no longer works at constant frequency, but at frequencies gradually lower (1 T_{ON} over 1 PWM cycle, 1 T_{ON} over 2 PWM cycles, …,1 T_{ON} over 16 PWM cycles) prior to entering Sleep-IN mode.

6.12 Sleep-IN mode

Once Sleep-IN mode has been entered, no current is provided to the load. The device exits this mode once the cause which forced it into this state is no longer present.

7 Package mechanical data

In order to meet environmental requirements, ST offers these devices in different grades of ECOPACK® packages, depending on their level of environmental compliance. ECOPACK® specifications, grade definitions and product status are available at: www.st.com. ECOPACK® is an ST trademark.

Table 6. TSSOP8 package mechanical data

Symbol	millimeters		
	Min.	Typ.	Max.
A			1.200
A1	0.050		0.150
A2	0.800	1.000	1.050
b	0.190		0.300
c	0.090		0.200
CP			0.100
D	2.900	3.000	3.100
e	–	0.650	–
E	6.200	6.400	6.600
E1	4.300	4.400	4.500
L	0.450	0.600	0.750
L1		1.000	
	0		8

Figure 15. TSSOP8 package mechanical drawing

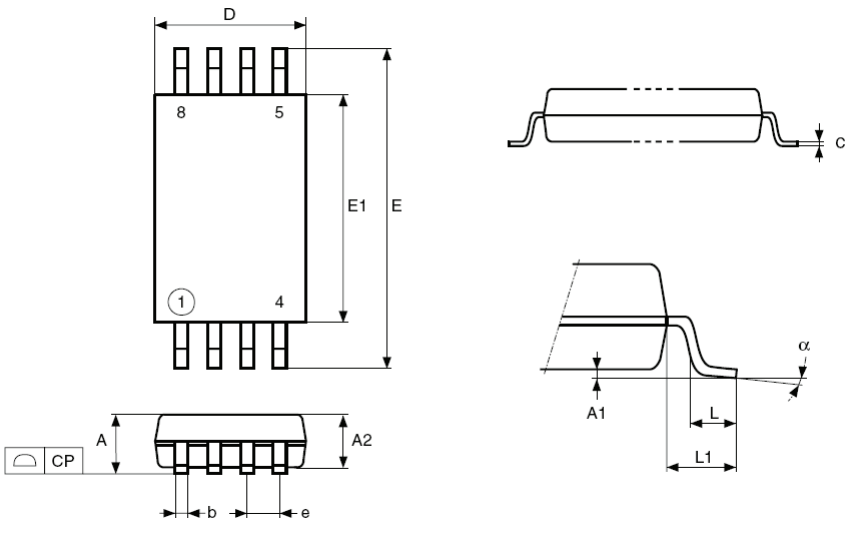

8 Revision history

Table 7. Document revision history

Date	Revision	Changes
08-Oct-2010	1	Initial release
06-Apr-2011	2	Updated coverpage, DFN8 information deleted, *Chapter 3*, *Chapter 4* and *Chapter 6*
04-Oct-2011	3	– Updated *Figure 1*, *Figure 2*, *Table 2* and *Table 5* – Minor text changes

Please Read Carefully:

Information in this document is provided solely in connection with ST products. STMicroelectronics NV and its subsidiaries (“ST”) reserve the right to make changes, corrections, modifications or improvements, to this document, and the products and services described herein at any time, without notice.

All ST products are sold pursuant to ST’s terms and conditions of sale.

Purchasers are solely responsible for the choice, selection and use of the ST products and services described herein, and ST assumes no liability whatsoever relating to the choice, selection or use of the ST products and services described herein.

No license, express or implied, by estoppel or otherwise, to any intellectual property rights is granted under this document. If any part of this document refers to any third party products or services it shall not be deemed a license grant by ST for the use of such third party products or services, or any intellectual property contained therein or considered as a warranty covering the use in any manner whatsoever of such third party products or services or any intellectual property contained therein.

UNLESS OTHERWISE SET FORTH IN ST’S TERMS AND CONDITIONS OF SALE ST DISCLAIMS ANY EXPRESS OR IMPLIED WARRANTY WITH RESPECT TO THE USE AND/OR SALE OF ST PRODUCTS INCLUDING WITHOUT LIMITATION IMPLIED WARRANTIES OF MERCHANTABILITY, FITNESS FOR A PARTICULAR PURPOSE (AND THEIR EQUIVALENTS UNDER THE LAWS OF ANY JURISDICTION), OR INFRINGEMENT OF ANY PATENT, COPYRIGHT OR OTHER INTELLECTUAL PROPERTY RIGHT.

UNLESS EXPRESSLY APPROVED IN WRITING BY TWO AUTHORIZED ST REPRESENTATIVES, ST PRODUCTS ARE NOT RECOMMENDED, AUTHORIZED OR WARRANTED FOR USE IN MILITARY, AIR CRAFT, SPACE, LIFE SAVING, OR LIFE SUSTAINING APPLICATIONS, NOR IN PRODUCTS OR SYSTEMS WHERE FAILURE OR MALFUNCTION MAY RESULT IN PERSONAL INJURY, DEATH, OR SEVERE PROPERTY OR ENVIRONMENTAL DAMAGE. ST PRODUCTS WHICH ARE NOT SPECIFIED AS "AUTOMOTIVE GRADE" MAY ONLY BE USED IN AUTOMOTIVE APPLICATIONS AT USER’S OWN RISK.

Resale of ST products with provisions different from the statements and/or technical features set forth in this document shall immediately void any warranty granted by ST for the ST product or service described herein and shall not create or extend in any manner whatsoever, any liability of ST.

ST and the ST logo are trademarks or registered trademarks of ST in various countries.

Information in this document supersedes and replaces all information previously supplied.

The ST logo is a registered trademark of STMicroelectronics. All other names are the property of their respective owners.

© 2011 STMicroelectronics - All rights reserved

STMicroelectronics group of companies

Australia - Belgium - Brazil - Canada - China - Czech Republic - Finland - France - Germany - Hong Kong - India - Israel - Italy - Japan - Malaysia - Malta - Morocco - Philippines - Singapore - Spain - Sweden - Switzerland - United Kingdom - United States of America

www.st.com