SPT02-236DDB

Automation sensor transient and overvoltage protection

Datasheet – production data



µQFN-2L
SPT02-236DDB

Features

- Double diode array for switch protection and reverse blocking protection
- 6 V to 36 V supply voltage range
- Minimum breakdown voltage V_{BR}: 38 V
- 8/20 µs 2 A maximum clamping voltage: 46 V
- Blocking diode drop forward voltage V_F: 1.1 V at 300 mA
- Blocking diode maximum 10 ms square pulse current I_{FSM}: 3 A
- Ambient temperature: -40 °C to +100 °C
- µQFN 2L 0.8 mm flat package

Complies with following standards

- Voltage surge: IEC 61000-4-5, R_{CC} = 500 Ω, ±1 kV
- Electrostatic discharge, IEC 61000-4-2:
  - ±8 kV contact discharge
  - ±15 kV air discharge
- Electrical transient immunity: IEC 61000-4-4: ±2 kV

Benefits

- Compliant for interface with logic input type 1, 2 and 3 IEC 61131-2 standard
- Highly compact with integrated power solution in SMD version

Applications

- Factory automation sensor application
- Proximity sensor interface protection
- Transient and surge voltage protection
- Compliant with sensor standard, EN 60947-5-2

Description

The SPT02 is specifically designed for the protection of 24 V proximity sensors. It implements the reverse polarity and the overvoltage protection of the sensor power supply and the power switch overvoltage protection.

It provides a very compact and flexible solution.

Thanks to high performance ST technology, the SPT02 protects the proximity sensor to the highest level compliant with IEC 61000-4-2, IEC 61000-4-4 and IEC 61000-4-5 standards.

Figure 1. Functional diagram (top view)

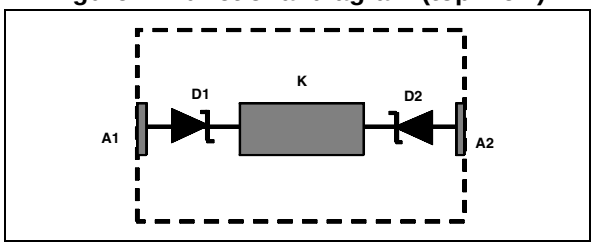

Figure 2. Bottom view

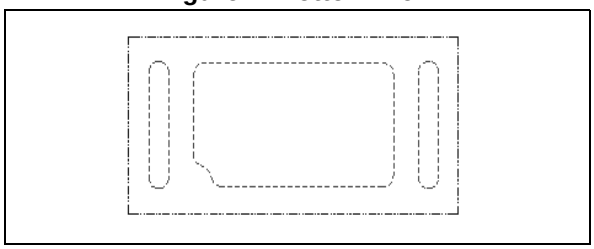

This is information on a product in full production. www.st.com

1 Basic application

Figure 3. STP02 configuration

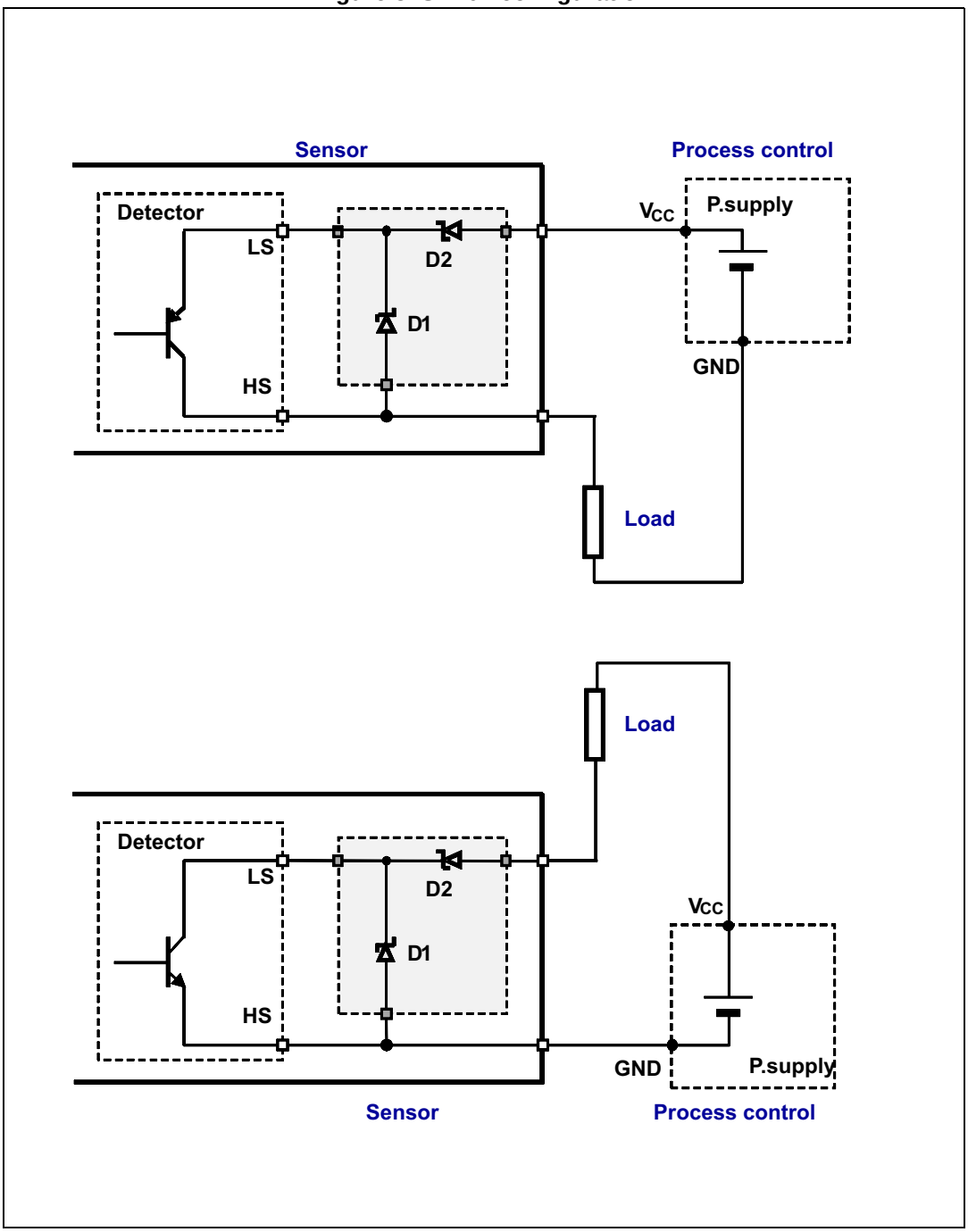

2 Characteristics

Table 1. Pinout connections(1)

Symbol	Description
K	D1 power bus protection diode cathode and D2 reverse blocking protection cathode
A1	D1 power bus protection diode anode
A2	D2 reverse blocking protection anode

1. See *Figure 1*

Table 2. Absolute ratings (T_{amb} = 25 °C)

Symbol	Diode	Parameter	Value	Unit
V_{PP}	All	ESD protection, IEC 61000-4-2, per diode, in air (1)	30	kV
		ESD protection, IEC 61000-4-2, per diode, in contact (1)	30	kV
V_{PP}	All	Peak Surge Voltage, IEC 61000-4-5, per diode, R_{CC} = 500 Ω, (1)	1	kV
P_{PP}	All	Peak pulse current, $T_J = T_{amb}$ = 85 °C, t_P = 8/20 µs	1400	W
I_{PP}	All	Peak pulse power dissipation, $T_J = T_{amb}$ = 85 °C, t_P = 8/20 µs	25	A
I_{FSM}	All	Maximum forward surge current, t_P = 10 ms square	3	A
E_{AR}	D1	Maximum repetitive avalanche energy L= 1 H, I_{RAS}= 0.3A, R_S = 100 Ω, V_{CC} = 30 V, T_{amb} = 85 °C, (1)	66	mJ
T_J	All	Storage junction temperature range	- 40 to 150	°C

1. See system oriented test circuits in *Figure 5* (ESD) and *Figure 4* (Surge as also described in IEC 60947-5-2).

Table 3. Recommended operating conditions

Symbol	Parameter	Value	Unit
V_{CC}	Operating power bus supply voltage	-30 to 35	V
	Pulse repetitive voltage t_P = 0.5 s, R_{CC} = 500 Ω	-30 to 37	V
I_F	D2 forward peak current T_j = 150 °C duty cycle = 50%	300	mA
T_{amb}	Operating ambient temperature range	-40 to 100	°C
T_J	Operating junction temperature range(1)	-40 to 150	°C

1. Extended from DC operating at 150 °C up to peak repetitive value during the inductive load demagnetization

Table 4. Thermal resistance

Symbol	Parameter	Value	Unit
Rth(j-a)	SMD thermal resistance junction to ambient, per diode FR4 board, copper thickness = 35 µm, recommended footprint	230	°C/W
Zth(j-a)	SMD thermal transient impedance junction to ambient, per diode t_p = 15 ms, T_{amb} = 85 °C, recommended footprint	6.5	°C/W

Table 5. Electrical characteristics (T_J = 25 °C, unless otherwise specified)

Symbol	Diode	Name	Test conditions		Value	Unit
V_{RM}	ALL	Reverse stand off voltage	I_R = 200 nA	MIN	33	V
			I_R = 1 µA	MIN	36	
I_{RM}	ALL	Leakage reverse current	V_{RM} = 36 V(1)	MAX	1	µA
			V_{RM} = 36 V, T_J = 150 °C	MAX	5	µA
V_{BR}	ALL	Reverse breakdown voltage	I_R = 1 mA	MIN	38	V
				TYP	41.4	V
V_{CL}	ALL	Peak clamping voltage	I_{PP} = 2 A, t_P = 8 /20 µs	MAX	46	V
				TYP	44	V
R_D	ALL	8/20µs dynamic resistance		TYP	0.5	Ω
αT	ALL	V_{BR} Temperature sensitivity(2)		MAX	17	10^{-4} /°C
V_{CL}	D1	Peak clamping voltage	I_R = 0.3 A, L = 1 H, V_{CC} = 30 V	MAX	46	V
V_F	D2	Forward drop voltage	I_F = 300 mA	MAX	1.1	V

1. Voltage applied at the nodes of each diode
2. V_{BR} @ T_J = V_{BR} @25 °C x (1+ αT x (T_J - 25))

3 System related electromagnetic compatibility ratings

Figure 4. Surge Voltage test circuit according to IEC 61000-4-5 with 500 Ω serial resistor

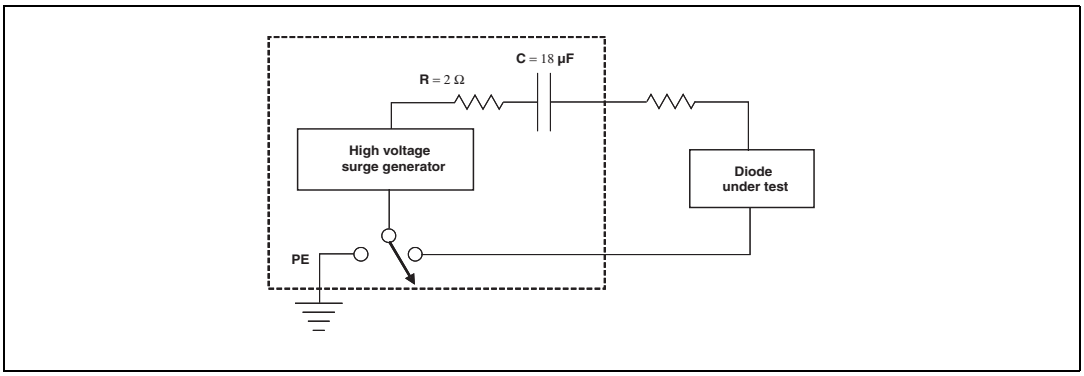

Figure 5. ESD test circuit according to IE 61000-4-2

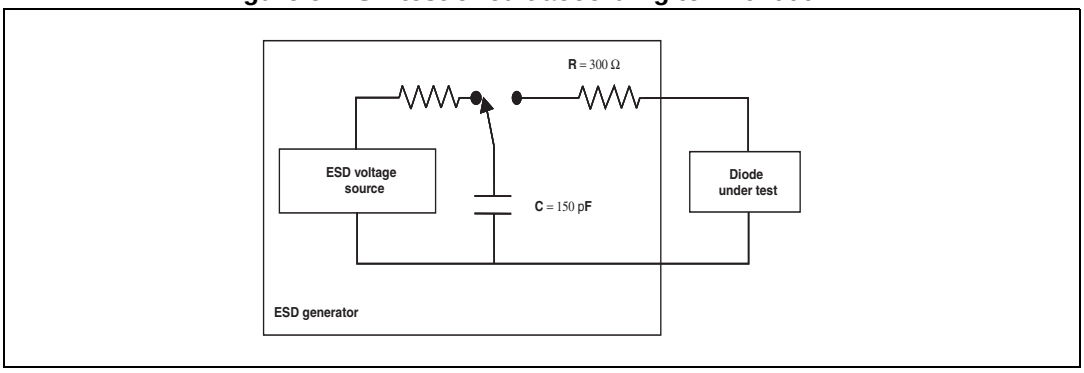

Figure 6. EOS test circuit according to IE 61000-4-5

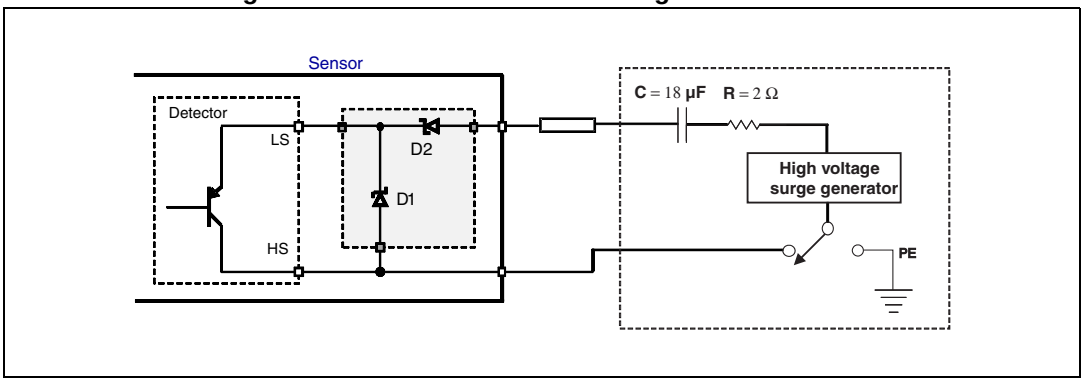

4 Evaluation of the clamping voltage

V_{BR} (T_J) = V_{BR} (25) x (1+ αT (T_J – 25))

$V_{CL\ MAX}$ (8/20 µs) = $V_{BR\ MAX}$ + R_D x I_{PP}

5 Application considerations

5.1 Demagnetization of an inductive load driven by the switch protection diode.

The turn off energy EOFF that could be dissipated in the D1 diode is calculated as shown in AN587 and AN1351 application notes:

$E_{OFF} = V_{BR} \times L / / (R_S)^2 \times [V_{CC} + (V_{CC} - V_{BR}) \times \ln (V_{BR} / (V_{BR} - V_{CC}))]$

$t_{OFF} = L \times \ln (V_{BR} / (V_{BR} - V_{CC})) / R_S$

$P_{OFF} = E_{OFF} / t_{OFF}$

With L = 1 H; I = 0.3 A; V_{BR} = 39 V; V_{CC} = 30 V, R_S = 100 Ω the stress withstood by D_1 becomes:

E_{OFF} = 65 mJ; t_{OFF} = 15 ms; P_{OFF} = 4.3 W

In a single pulse mode operation, the junction temperature can be fairly estimated:

$T_J = T_{amb} + [Z_{TH} (t_{OFF}) \times P_{OFF}]$

In a repetitive operation with an F repetitive rate,

$P_{AV} = E_{OFF} \times F$

$T_{J_AV} = T_{amb} + P_{AV} \times R_{TH_JA}$

And during the demagnetization t_{OFF}, $T_{J_PK} < T_{J_AV} + P_{OFF} \times Z_{TH} (t_{OFF})$

Z_{TH} is the transient thermal impedance of each diode for a pulse having a duration t_{OFF}.

Figure 7. Electrical diagram for inductive load demagnetization

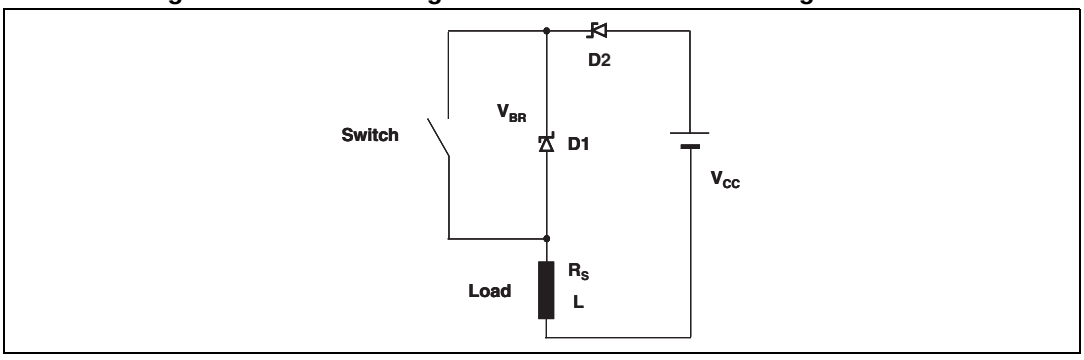

5.2 Life time considerations

Life time of the product is calculated to exceed 10 years. The key parameters to consider are the ambient temperature (T_{amb} < 100 °C), the power supply voltage (V_{CC} < 30 V), and the current in the reverse blocking diode (I_F = 0.1 A switching at 0.5 Hz with 50% duty cycle, the stand-by current being less than 1.5 mA).

For higher current or higher switching frequency operation, the life time should be calculated considering the peak and average junction temperature.

6 Package information

- Epoxy meets UL94,V0
- Lead-free package

In order to meet environmental requirements, ST offers these devices in different grades of ECOPACK® packages, depending on their level of environmental compliance. ECOPACK® specifications, grade definitions and product status are available at: *www.st.com.* ECOPACK® is an ST trademark.

Figure 8. µQFN-2L dimensions (definitions)

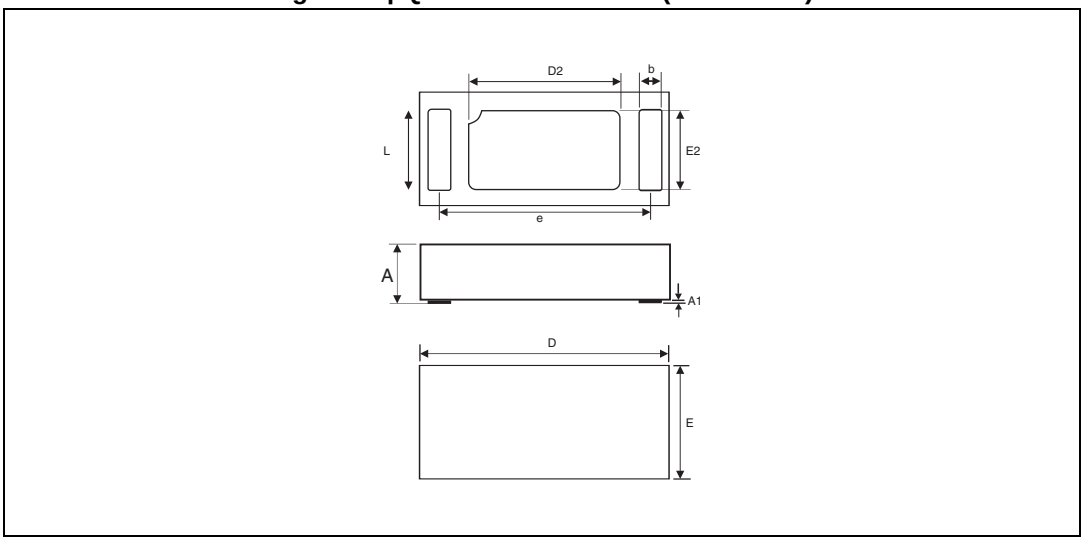

Table 6. µQFN-2L dimensions (values)

Ref.	Dimensions					
	Millimeters			Inches		
	Min.	Typ.	Max.	Min.	Typ.	Max.
A	0.70	0.75	0.80	0.027	0.029	0.031
A1	0.00	0.02	0.05	0.00	0.001	0.002
b	0.25	0.30	0.35	0.010	0.011	0.014
D	-	3.30	-	-	0.13	-
D2	1.85	2.00	2.10	0.073	0.079	0.082
E	-	1.50	-	-	0.06	-
E2	0.90	1.05	1.16	0.035	0.041	0.046
e	-	2.8	-	-	0.110	-
L	0.97	1.07	1.18	0.038	0.042	0.046

Figure 9. Footprint (dimensions in mm)

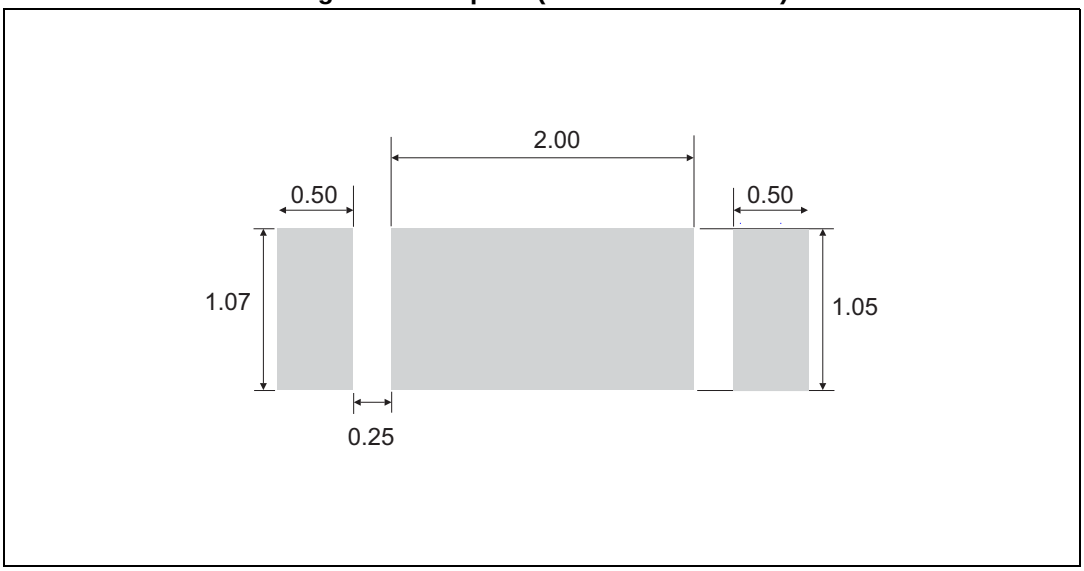

7 Recommendation on PCB assembly

7.1 Stencil opening design

1. General recommendation on stencil opening design
   a) Stencil opening dimensions: L (Length), W (Width), T (Thickness).

Figure 10. Stencil opening dimensions

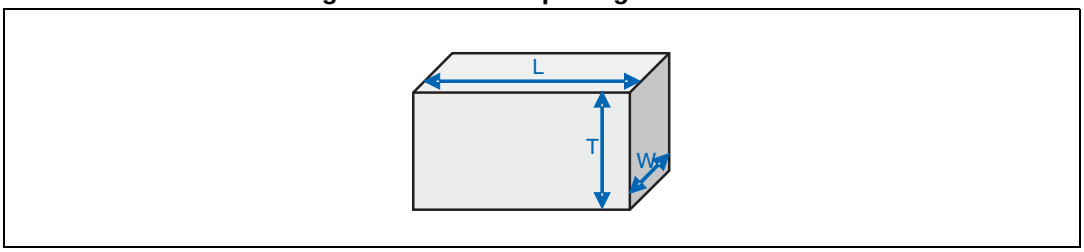

   b) General design rule
   Stencil thickness (T) = 75 ~ 125 µm

$$\text{Aspect Ratio} = \frac{W}{T} \geq 1{,}5$$

$$\text{Aspect Area} = \frac{L \times W}{2T(L + W)} \geq 0{,}66$$

2. Reference design
   a) Stencil opening thickness: 100 µm
   b) Stencil opening for central exposed pad: Opening to footprint ratio is 50%.
   c) Stencil opening for leads: Opening to footprint ratio is 90%.

7.2 Solder paste

1. Halide-free flux qualification ROL0 according to ANSI/J-STD-004.
2. “No clean” solder paste is recommended.
3. Offers a high tack force to resist component movement during high speed.
4. Solder paste with fine particles: powder particle size is 20-45 µm.

7.3 Placement

1. Manual positioning is not recommended.
2. It is recommended to use the lead recognition capabilities of the placement system, not the outline centering.
3. Standard tolerance of ± 0.05 mm is recommended.
4. 3.5 N placement force is recommended. Too much placement force can lead to squeezed out solder paste and cause solder joints to short. Too low placement force can lead to insufficient contact between package and solder paste that could cause open solder joints or badly centered packages.
5. To improve the package placement accuracy, a bottom side optical control should be performed with a high resolution tool.
6. For assembly, a perfect supporting of the PCB (all the more on flexible PCB) is recommended during solder paste printing, pick and place and reflow soldering by using optimized tools.

7.4 PCB design preference

1. To control the solder paste amount, the closed via is recommended instead of open vias.
2. The position of tracks and open vias in the solder area should be well balanced. The symmetrical layout is recommended, in case any tilt phenomena caused by asymmetrical solder paste amount due to the solder flow away.

7.5 Reflow profile

Figure 11. ST ECOPACK® recommended soldering reflow profile for PCB mounting

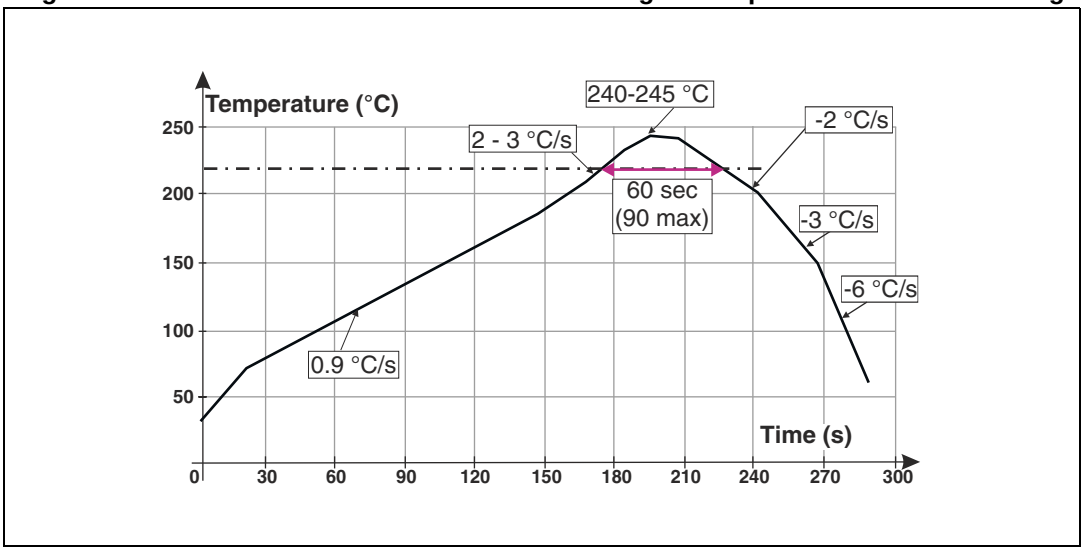

Note: Minimize air convection currents in the reflow oven to avoid component movement.

Compliant with J-STD-020D soldering profile

8 Ordering information

Figure 12. Ordering information scheme

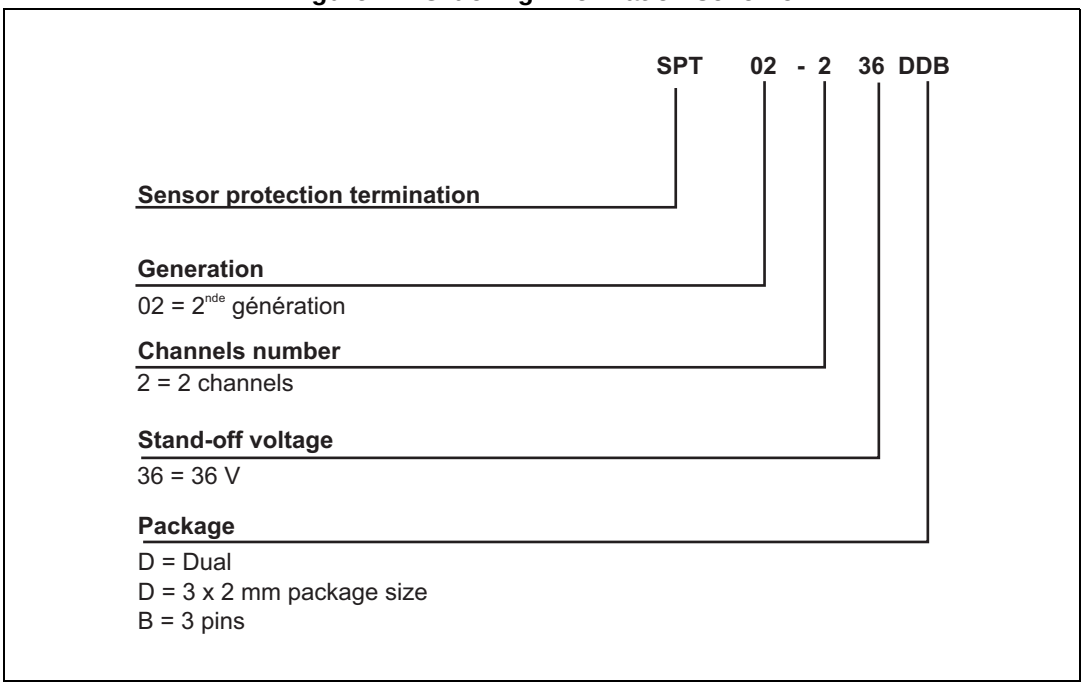

Table 7. Ordering information

Order code	Marking	Package	Weight	Packing
SPT02-236DDB	S2	µQFN-2L with exposed pad	15.55 mg	Tape and reel

9 Revision history

Table 8. Document revision history

Date	Revision	Changes
06-May-2013	1	First issue
21-Mar-2014	2	Updated *Table 2*, *Table 6* and *Figure 9*.

Please Read Carefully:

Information in this document is provided solely in connection with ST products. STMicroelectronics NV and its subsidiaries (“ST”) reserve the right to make changes, corrections, modifications or improvements, to this document, and the products and services described herein at any time, without notice.

All ST products are sold pursuant to ST’s terms and conditions of sale.

Purchasers are solely responsible for the choice, selection and use of the ST products and services described herein, and ST assumes no liability whatsoever relating to the choice, selection or use of the ST products and services described herein.

No license, express or implied, by estoppel or otherwise, to any intellectual property rights is granted under this document. If any part of this document refers to any third party products or services it shall not be deemed a license grant by ST for the use of such third party products or services, or any intellectual property contained therein or considered as a warranty covering the use in any manner whatsoever of such third party products or services or any intellectual property contained therein.

UNLESS OTHERWISE SET FORTH IN ST’S TERMS AND CONDITIONS OF SALE ST DISCLAIMS ANY EXPRESS OR IMPLIED WARRANTY WITH RESPECT TO THE USE AND/OR SALE OF ST PRODUCTS INCLUDING WITHOUT LIMITATION IMPLIED WARRANTIES OF MERCHANTABILITY, FITNESS FOR A PARTICULAR PURPOSE (AND THEIR EQUIVALENTS UNDER THE LAWS OF ANY JURISDICTION), OR INFRINGEMENT OF ANY PATENT, COPYRIGHT OR OTHER INTELLECTUAL PROPERTY RIGHT.

ST PRODUCTS ARE NOT DESIGNED OR AUTHORIZED FOR USE IN: (A) SAFETY CRITICAL APPLICATIONS SUCH AS LIFE SUPPORTING, ACTIVE IMPLANTED DEVICES OR SYSTEMS WITH PRODUCT FUNCTIONAL SAFETY REQUIREMENTS; (B) AERONAUTIC APPLICATIONS; (C) AUTOMOTIVE APPLICATIONS OR ENVIRONMENTS, AND/OR (D) AEROSPACE APPLICATIONS OR ENVIRONMENTS. WHERE ST PRODUCTS ARE NOT DESIGNED FOR SUCH USE, THE PURCHASER SHALL USE PRODUCTS AT PURCHASER’S SOLE RISK, EVEN IF ST HAS BEEN INFORMED IN WRITING OF SUCH USAGE, UNLESS A PRODUCT IS EXPRESSLY DESIGNATED BY ST AS BEING INTENDED FOR “AUTOMOTIVE, AUTOMOTIVE SAFETY OR MEDICAL” INDUSTRY DOMAINS ACCORDING TO ST PRODUCT DESIGN SPECIFICATIONS. PRODUCTS FORMALLY ESCC, QML OR JAN QUALIFIED ARE DEEMED SUITABLE FOR USE IN AEROSPACE BY THE CORRESPONDING GOVERNMENTAL AGENCY.

Resale of ST products with provisions different from the statements and/or technical features set forth in this document shall immediately void any warranty granted by ST for the ST product or service described herein and shall not create or extend in any manner whatsoever, any liability of ST.

ST and the ST logo are trademarks or registered trademarks of ST in various countries.
Information in this document supersedes and replaces all information previously supplied.
The ST logo is a registered trademark of STMicroelectronics. All other names are the property of their respective owners.

© 2014 STMicroelectronics - All rights reserved

STMicroelectronics group of companies

Australia - Belgium - Brazil - Canada - China - Czech Republic - Finland - France - Germany - Hong Kong - India - Israel - Italy - Japan - Malaysia - Malta - Morocco - Philippines - Singapore - Spain - Sweden - Switzerland - United Kingdom - United States of America

www.st.com