SPS-9340RWG / SPS-9340BRWG / SPS-9340ARWG (RoHS Compliant)

3.3V / 1550 nm / 3.2Gb/s Digital Diagnostic SFP LC SINGLE-MODE TRANSCEIVER

FEATURES

- Multirate up to 3.2 Gbps
- Hot-Pluggable SFP Footprint LC Optical Transceiver
- Small Form-Factor Pluggable (SFP) MSA compatible
- SFF-8472 Digital Diagnostic Function
- 1550 nm DFB LD Transmitter
- AC/AC Coupling according to MSA
- Single +3.3 V Power Supply
- RoHS Compliant
- 0 to 70°C Operation: SPS-9340RWG
- -10 to 85°C Operation: SPS-9340BRWG
- -40 to 85°C Operation: SPS-9340ARWG
- Class 1 Laser International Safety Standard IEC-60825 Compliant

APPLICATIONS

- 10GBASE LX-4
- Serial ATA / ATA2
- SONET OC-48 / SDH STM-16
- SONET OC-12 / SDH STM-4
- SONET OC-3 / SDH STM-1
- Gigabit Ethernet / 1X/2X Fibre Channel

DESCRIPTION

The SPS-9340RWG series single mode transceivers is small form factor pluggable module for bi-directional serial optical data communications such as 10GBASE LX-4, Serial ATA/ATA2, SONET OC-48 / SDH STM-16, Gigabit Ethernet 1000BASE-LX and 1x/2x Fibre Channel. It is with the SFP 20-pin connector to allow hot plug capability. Digital diagnostic functions are available via an I^2C. This module is designed for single mode fiber and operates at a nominal wavelength of 1550 nm. A guaranteed minimum optical link budget of 18 dB is offered which can correspond to a link distance of over 40 km (assuming worst case fiber loss of 0.3 dB/km). The transmitter section uses a multiple quantum well 1550 nm DFB laser and is a class 1 laser compliant according to International Safety Standard IEC-60825. The receiver section uses an integrated InGaAs detector preamplifier (IDP) mounted in an optical header and a limiting post-amplifier IC.

LASER SAFETY

This single mode transceiver is a Class 1 laser product. It complies with IEC-60825 and FDA 21 CFR 1040.10 and 1040.11. The transceiver must be operated within the specified temperature and voltage limits. The optical ports of the module shall be terminated with an optical connector or with a dust plug.

ORDER INFORMATION

P/No.	Bit Rate (Mb/s)	SONET /SDH	Distance (km)	Wavelength (nm)	Package	Temp. (°C)	TX Power (dBm)	RX Sens. (dBm)	RoHS Compliant
SPS-9340RWG	Multirate*		40	1550 DFB	LC SFP with DMI	0 to 70	3 to -2	-20	Yes
SPS-9340BRWG	Multirate*		40	1550 DFB	LC SFP with DMI	-10 to 85	3 to -2	-20	Yes
SPS-9340ARWG	Multirate*		40	1550 DFB	LC SFP with DMI	-40 to 85	3 to -2	-20	Yes

Multirate*: 3.185Gb/s, 3.125Gb/s, 2.67 Gb/s / OC-48 / 2X FC / GbE / 1X FC / OC-12 / OC-3

Absolute Maximum Ratings

Parameter	Symbol	Min	Max	Units	Notes
Storage Temperature	Tstg	-40	85	°C	
Operating Case Temperature	Topr	0	70	°C	SPS-9340RWG
		-10	85		SPS-9340BRWG
		-40	85		SPS-9340ARWG
Power Supply Voltage	Vcc	-0.5	3.6	V	

Recommended Operating Conditions

Parameter	Symbol	Min	Typ	Max	Units / Notes
Power Supply Voltage	Vcc	3.1	3.3	3.5	V
Operating Case Temperature	Topr	0		70	°C / SPS-9340RWG
		-10		85	°C / SPS-9340BRWG
		-40		85	°C / SPS-9340ARWG
Power Supply Current	$I_{CC\ (TX+RX)}$		200	300	mA
Data Rate		125	2488	2670	Mb/s

OPTOWAY TECHNOLOGY INC. No.38, Kuang Fu S. Road, Hu Kou, Hsin Chu Industrial Park, Hsin Chu, Taiwan 303
Tel: 886-3-5979798 Fax: 886-3-5979737
E-mail: sales@optoway.com.tw http: // www.optoway.com.tw

Transmitter Specifications (0^oC < Topr < 70^oC, 3.1V < Vcc < 3.5V)						
Parameter	**Symbol**	**Min**	**Typ**	**Max**	**Units**	**Notes**
Optical						
Optical Transmit Power	Po	-2	---	3	dBm	1
Output Center Wavelength	λ	1480	1550	1580	nm	
Output Spectrum Width	Δλ	---	---	1	nm	-20 dB Width
Side Mode Suppression Ratio	SMSR	30			dB	
Extinction Ratio	E_R	6.0	---	---	dB	
Output Eye	Compliant with IEEE 802.3-2008 10GBASE-LX4					
Optical Rise Time	t_r			120	ps	20 % to 80% Values
Optical Fall Time	t_f			120	ps	20 % to 80% Values
Relative Intensity Noise	RIN			-120	dB/Hz	
Electrical						
Data Input Current – Low	I_{IL}	-350			μA	
Data Input Current – High	I_{IH}			350	μA	
Differential Input Voltage	V_{IH} - V_{IL}	0.5		2.4	V	Peak-to-Peak
TX Disable Input Voltage – Low	$T_{DIS, L}$	0		0.5	V	2
TX Disable Input Voltage – High	$T_{DIS, H}$	2.0		Vcc	V	2
TX Disable Assert Time	T_{ASSERT}			10	μs	
TX Disable Deassert Time	$T_{DEASSERT}$			1	ms	
TX Fault Output Voltage -- Low	T_{FaultL}	0		0.5	V	3
TX Fault Output Voltage -- High	T_{FaultH}	2.0		Vcc+0.3	V	3

1. Output power is power coupled into a 9/125 μm single mode fiber.
2. There is an internal 4.7K to 10K ohm pull-up resistor to VccTX.
3. Open collector compatible, 4.7K to 10K ohm pull-up to Vcc (Host Supply Voltage).

Receiver Specifications (0^oC < Topr < 70^oC, 3.1V < Vcc < 3.5V)						
Parameter	**Symbol**	**Min**	**Typ**	**Max**	**Units**	**Notes**
Optical						
Sensitivity @ 3.125Gb/s	Sens1	-3		-18	dBm	4
Sensitivity @ OC-48	Sens1	-3		-18	dBm	5
Sensitivity @2X Fibre Channal	Sens2	-3		-19	dBm	4
Sensitivity @Gigabit Ethernet	Sens3	-3		-20	dBm	4
Signal Detect -- Asserted	Pa	---		-18	dBm	Transition: low to high
Signal Detect -- Deasserted	Pd	-33	---	---	dBm	Transition: high to low
Signal detect -- Hysteresis		1.0	---		dB	
Wavelength of Operation		1100	---	1600	nm	
Electrical						
Differential Output Voltage	$V_{OH} – V_{OL}$	0.6		2.0	V	
Output LOS Voltage -- Low	V_{OL}	0		0.5	V	6
Output LOS Voltage -- High	V_{OH}	2.0		Vcc+0.3	V	6
LOS Assert Time	$T_{-loss-on}$			100	μs	
LOS Deassert Time	$T_{-loss-off}$			100	μs	

4. Measured at 2^7-1 PRBS at BER 1E-12 @1300nm.
5. Measured at 2^{23}-1 PRBS at BER 1E-10 @ 1300 nm.
6. Open collector compatible, 4.7K to 10K ohm pull-up to Vcc (Host Supply Voltage).

CONNECTION DIAGRAM

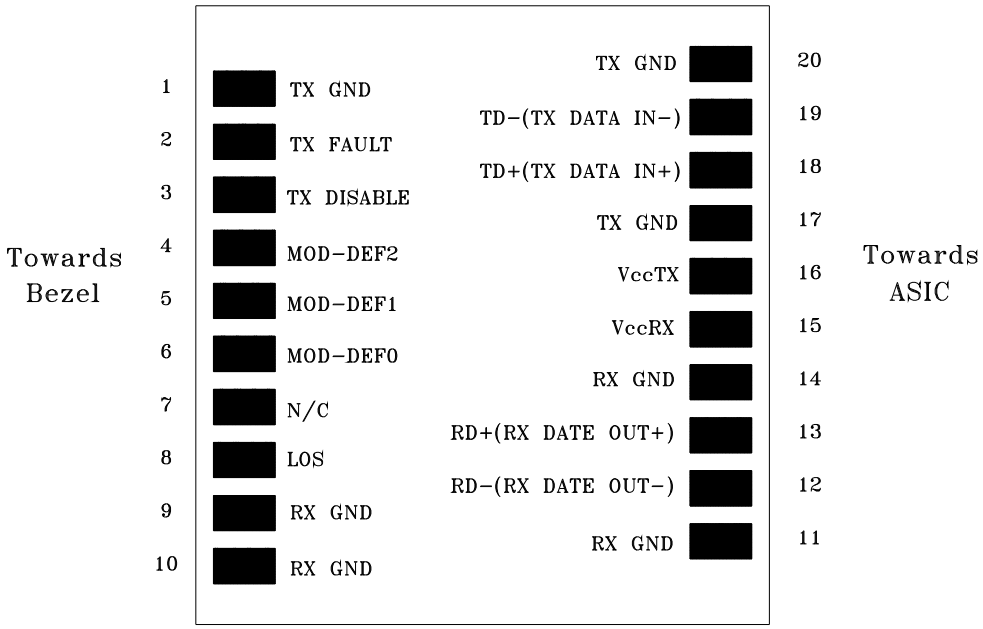

PIN	Signal Name	Description	PIN	Signal Name	Description
1	TX GND	Transmitter Ground	11	RX GND	Receiver Ground
2	TX Fault	Transmitter Fault Indication	12	RX DATA OUT-	Inverse Receiver Data Out
3	TX Disable	Transmitter Disable (Module disables on high or open)	13	RX DATA OUT+	Receiver Data Out
4	MOD-DFE2	Modulation Definition 2 – Two wires serial ID Interface	14	RX GND	Receiver Ground
5	MOD-DEF1	Modulation Definition 1 – Two wires serial ID Interface	15	Vcc RX	Receiver Power – 3.3V±5%
6	MOD-DEF0	Modulation Definition 0 – Ground in Module	16	Vcc TX	Transmitter Power – 3.3V±5%
7	N/C	Not Connected	17	TX GND	Transmitter Ground
8	LOS	Loss of Signal	18	TX DATA IN+	Transmitter Data In
9	RX GND	Receiver Ground	19	TX DATA IN-	Inverse Transmitter Data In
10	RX GND	Receiver Ground	20	TX GND	Transmitter Ground

MODULE DEFINITION

Module Definition	MOD-DEF2 PIN 4	MOD-DEF1 PIN 5	MOD-DEF0 PIN 6	Interpretation by Host
4	SDA	SCL	LV-TTL Low	Serial module definition protocol

Module Definition 4 specifies a serial definition protocol. For this definition, upon power up, MOD-DEF(1:2) appear as no connector (NC) and MOD-DEF(0) is TTL LOW. When the host system detects this condition, it activates the serial protocol. The protocol uses the 2-wire serial CMOS E^2PROM protocol of the ATMEL AT24C01A/02/04 family of components.

RECOMMENDED CIRCUIT SCHEMATIC

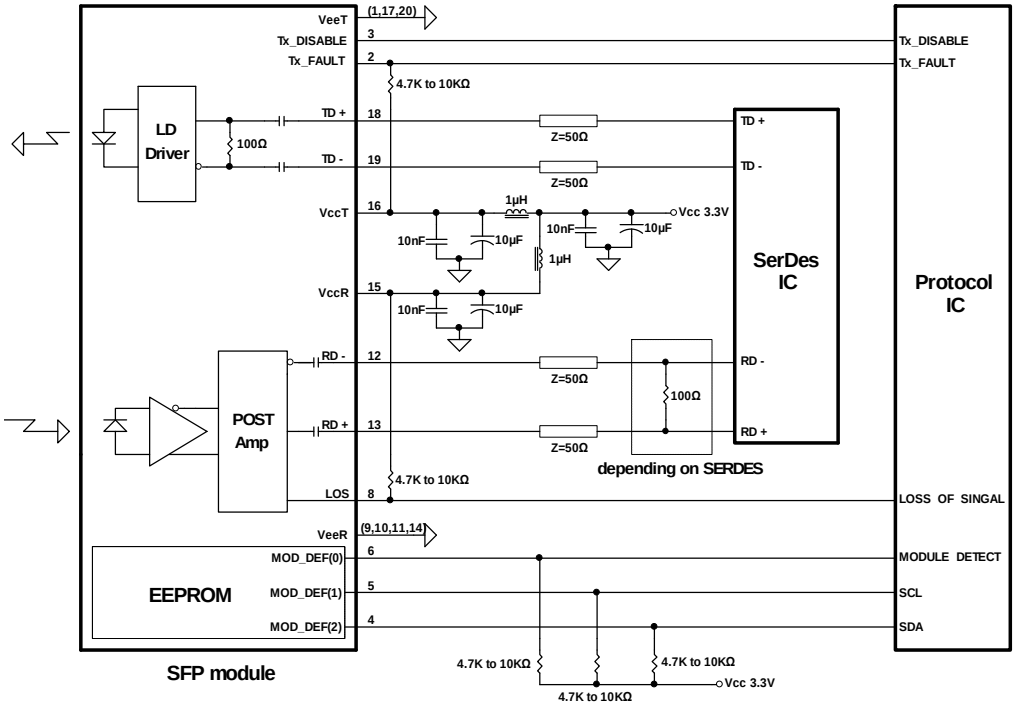

PACKAGE DIAGRAM

Units in mm

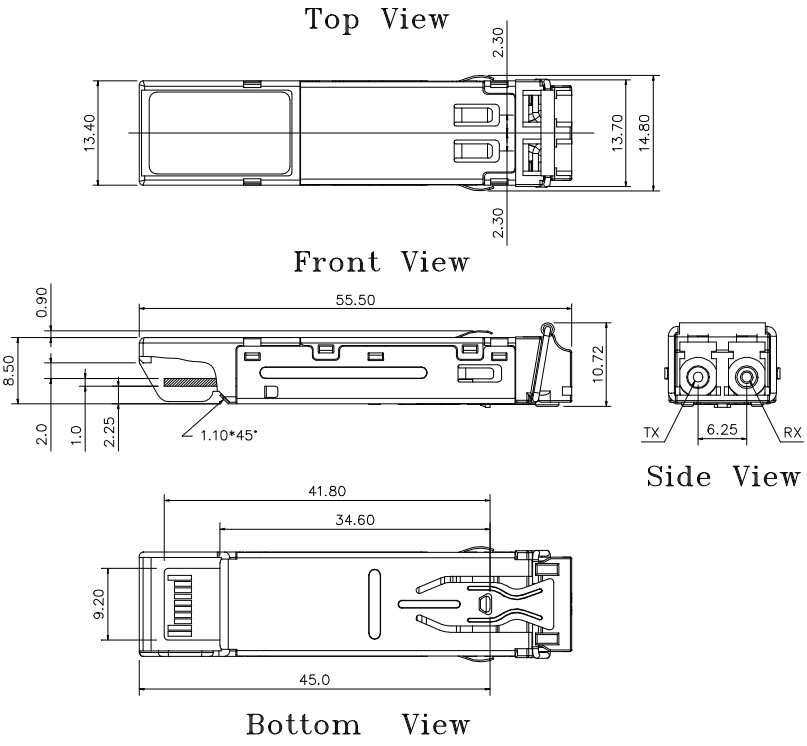

Note: Specifications subject to change without notice.

REVISION HISTORY

Version	Subject	Release Date
1.0	Initial datasheet	2008/1/1
2.0	Update transmitter eye mask definition and rise/fall time	2009/1/1