SPS-7350G / SPS-7350BG / SPS-7350AG (RoHS Compliant)

3.3V / 1550 nm / 1.25 Gbps LC SFP SINGLE-MODE TRANSCEIVER

FEATURES

- Hot-Pluggable SFP Footprint LC Optical Transceiver
- Small Form-Factor Pluggable (SFP) MSA compatible
- Compliant with IEEE 802.3z 1000BASE-XD
- Compliant with Fibre Channel 1x SM-LC-L FC-PI
- AC/AC Coupling according to MSA
- 1550 nm DFB LD Transmitter
- Distance up to 50 km
- Single +3.3 V Power Supply
- RoHS Compliant
- 0 to 70°C Operation: SPS-7350G
- -10 to 85°C Operation: SPS-7350BG
- -40 to 85°C Operation: SPS-7350AG
- Class 1 Laser International Safety Standard IEC-60825 Compliant

APPLICATIONS

- Gigabit Ethernet Switches and Routers
- Fibre Channel Switch Infrastructure
- XDSL Applications
- Metro Edge Switching

DESCRIPTION

The SPS-7350G series single mode transceivers is small form factor pluggable module for bi-directional serial optical data communications such as Gigabit Ethernet 1000BASE-XD and Fibre Channel 1x SM-LC-L FC-PI. It is with the SFP 20-pin connector to allow hot plug capability. This module is designed for single mode fiber and operates at a nominal wavelength of 1550 nm. The transmitter section uses a multiple quantum well laser and is a class 1 laser compliant according to International Safety Standard IEC-60825. The receiver section uses an integrated InGaAs detector preamplifier (IDP) mounted in an optical header and a limiting post-amplifier IC.

LASER SAFETY

This single mode transceiver is a Class 1 laser product. It complies with IEC-60825 and FDA 21 CFR 1040.10 and 1040.11. The transceiver must be operated within the specified temperature and voltage limits. The optical ports of the module shall be terminated with an optical connector or with a dust plug.

ORDER INFORMATION

P/No.	Bit Rate (Gb/s)	1000 BASE	Distance (km)	Wavelength (nm)	Package	Temp. (°C)	TX Power (dBm)	RX Sens. (dBm)	RoHS Compliant
SPS-7350G	1.25	XD	50	1550 DFB	LC SFP	0 to 70	0 to -5	-24	Yes
SPS-7350BG	1.25	XD	50	1550 DFB	LC SFP	-10 to 85	0 to -5	-24	Yes
SPS-7350AG	1.25	XD	50	1550 DFB	LC SFP	-40 to 85	0 to -5	-24	Yes

Absolute Maximum Ratings

Parameter	Symbol	Min	Max	Units	Notes
Storage Temperature	Tstg	-40	85	°C	
Operating Case Temperature	Topr	0 -10 -40	70 85 85	°C	SPS-7350G SPS-7350BG SPS-7350AG
Power Supply Voltage	Vcc	-0.5	3.6	V	

Recommended Operating Conditions

Parameter	Symbol	Min	Typ	Max	Units / Notes
Power Supply Voltage	Vcc	3.1	3.3	3.5	V
Operating Case Temperature	Topr	0 -10 -40		70 85 85	°C / SPS-7350G °C / SPS-7350BG °C / SPS-7350AG
Power Supply Current	$I_{CC (TX+RX)}$		200	300	mA
Data Rate		100	1250		Mb/s

OPTOWAY TECHNOLOGY INC. No.38, Kuang Fu S. Road, Hu Kou, Hsin Chu Industrial Park, Hsin Chu, Taiwan 303
Tel: 886-3-5979798 Fax: 886-3-5979737
E-mail: sales@optoway.com.tw http: // www.optoway.com.tw 1/1/2008 V2.0

Transmitter Specifications (0^oC < Topr < 70^oC, 3.1V < Vcc < 3.5V)						
Parameter	**Symbol**	**Min**	**Typ**	**Max**	**Units**	**Notes**
Optical						
Optical Transmit Power	Po	-5	---	0	dBm	1
Output Center Wavelength	λ	1480		1580	nm	
Output Spectrum Width	Δλ	---	---	1	nm	-20 dB width
Side Mode Suppression Ratio	SMSR	30			dB	
Extinction Ratio	E_R	9	---	---	dB	
Optical Rise Time	t_r			260	ps	20 % to 80% Values
Optical Fall Time	t_f			260	ps	20 % to 80% Values
Relative Intensity Noise	RIN			-120	dB/Hz	
Electrical						
Data Input Current – Low	I_{IL}	-350			μA	
Data Input Current – High	I_{IH}			350	μA	
Differential Input Voltage	V_{IH} - V_{IL}	0.5		2.4	V	Peak-to-Peak
TX Disable Input Voltage – Low	$T_{DIS, L}$	0		0.5	V	2
TX Disable Input Voltage – High	$T_{DIS, H}$	2.0		Vcc	V	2
TX Disable Assert Time	T_{ASSERT}			10	μs	
TX Disable Deassert Time	$T_{DEASSERT}$			1	ms	
TX Fault Output Voltage -- Low	T_{FaultL}	0		0.5	V	3
TX Fault Output Voltage -- High	T_{FaultH}	2.0		Vcc+0.3	V	3

1. Output power is power coupled into a 9/125 μm single mode fiber.
2. There is an internal 4.7K to 10K ohm pull-up resistor to VccTX.
3. Open collector compatible, 4.7K to 10K ohm pull-up to Vcc (Host Supply Voltage).

Receiver Specifications (0^oC < Topr < 70^oC, 3.1V < Vcc < 3.5V)						
Parameter	**Symbol**	**Min**	**Typ**	**Max**	**Units**	**Notes**
Optical						
Sensitivity	Sens			-24	dBm	4
Maximum Input Power	Pin	-3			dBm	4
Signal Detect -- Asserted	Pa	---		-24	dBm	Transition: low to high
Signal Detect -- Deasserted	Pd	-36	---	---	dBm	Transition: high to low
Signal detect -- Hysteresis		1.0	---		dB	
Wavelength of Operation		1100	---	1600	nm	
Electrical						
Differential Output Voltage	V_{OH} – V_{OL}	0.6		2.0	V	
Output LOS Voltage -- Low	V_{OL}	0		0.5	V	5
Output LOS Voltage – High	V_{OH}	2.0		Vcc+0.3	V	5

4. Measured at 2^7-1 PRBS at BER 1E-12 @ 1550 nm.
5. Open collector compatible, 4.7K to 10K ohm pull-up to Vcc (Host Supply Voltage).

CONNECTION DIAGRAM

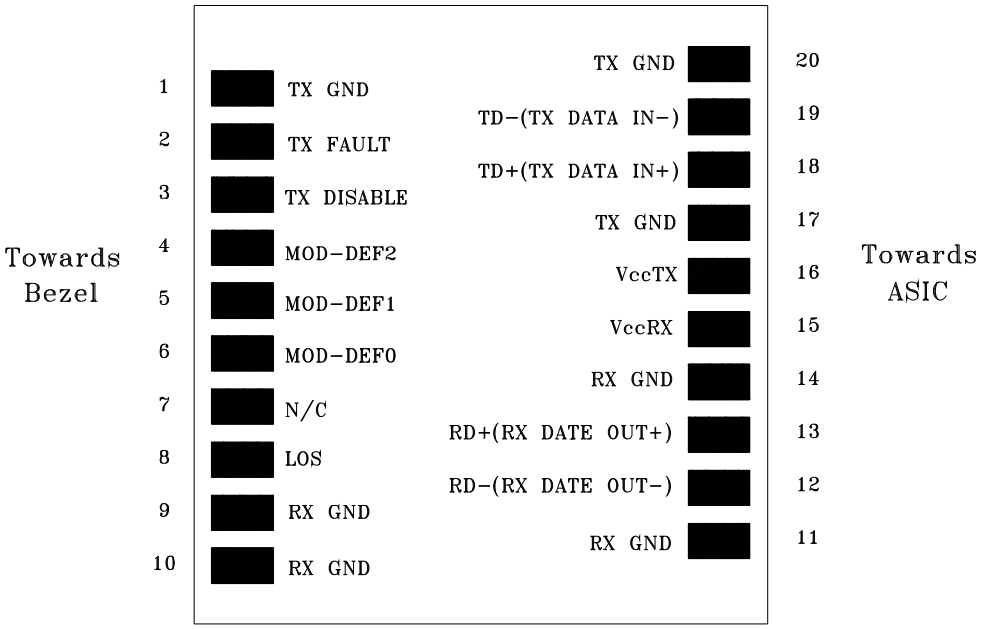

PIN	Signal Name	Description	PIN	Signal Name	Description
1	TX GND	Transmitter Ground	11	RX GND	Receiver Ground
2	TX Fault	Transmitter Fault Indication	12	RX DATA OUT-	Inverse Receiver Data Out
3	TX Disable	Transmitter Disable (Module disables on high or open)	13	RX DATA OUT+	Receiver Data Out
4	MOD-DFE2	Modulation Definition 2 – Two wires serial ID Interface	14	RX GND	Receiver Ground
5	MOD-DEF1	Modulation Definition 1 – Two wires serial ID Interface	15	Vcc RX	Receiver Power – 3.3V±5%
6	MOD-DEF0	Modulation Definition 0 – Ground in Module	16	Vcc TX	Transmitter Power – 3.3V±5%
7	N/C	Not Connected	17	TX GND	Transmitter Ground
8	LOS	Loss of Signal	18	TX DATA IN+	Transmitter Data In
9	RX GND	Receiver Ground	19	TX DATA IN-	Inverse Transmitter Data In
10	RX GND	Receiver Ground	20	TX GND	Transmitter Ground

Module Definition

Module Definition	MOD-DEF2 PIN 4	MOD-DEF1 PIN 5	MOD-DEF0 PIN 6	Interpretation by Host
4	SDA	SCL	LV-TTL Low	Serial module definition protocol

Module Definition 4 specifies a serial definition protocol. For this definition, upon power up, MOD-DEF(1:2) appear as no connector (NC) and MOD-DEF(0) is TTL LOW. When the host system detects this condition, it activates the serial protocol. The protocol uses the 2-wire serial CMOS E^2PROM protocol of the ATMEL AT24C01A/02/04 family of components.

RECOMMENDED CIRCUIT SCHEMATIC

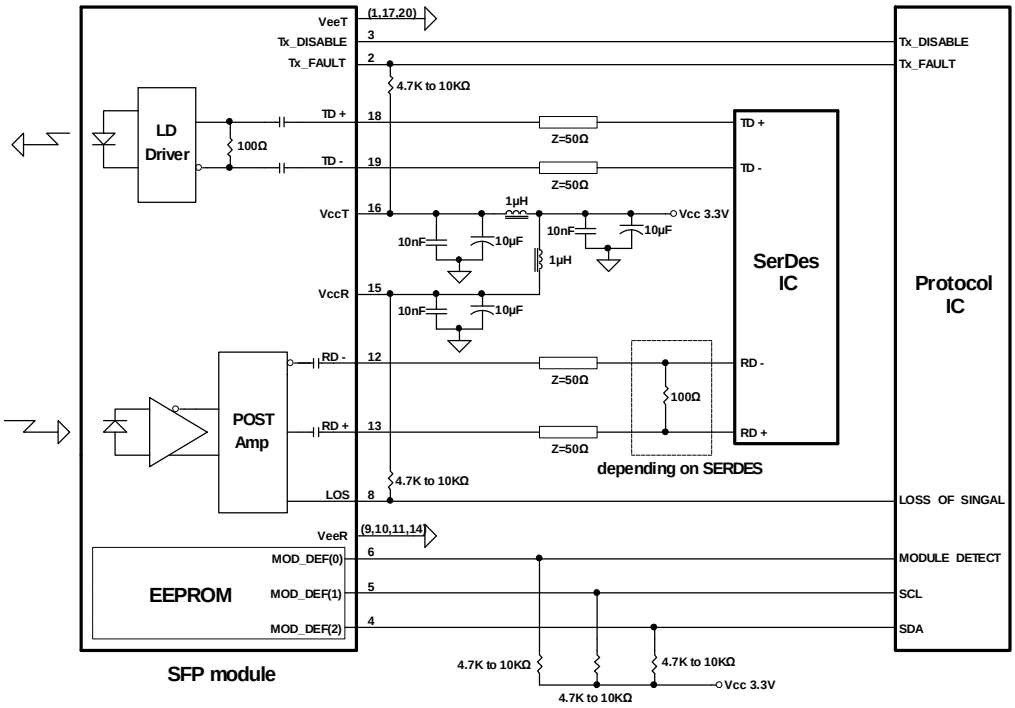

PACKAGE DIAGRAM

Units in mm

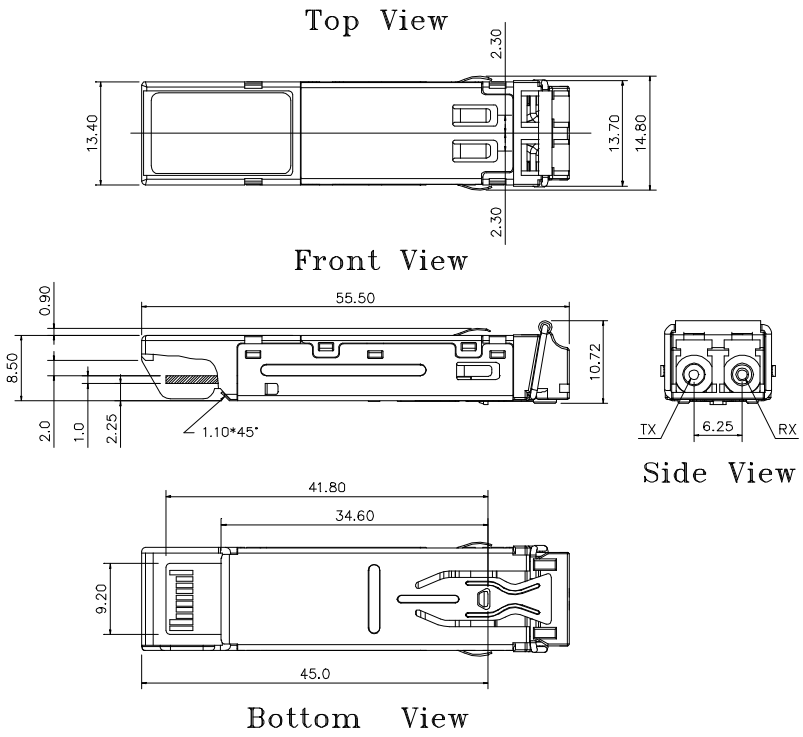

Note: Specifications subject to change without notice.

Revision History

Version	Subject	Release Date
1.0	Initial datasheet	2005/12/1
2.0	Revise package diagram for high port density use	2008/1/1