SPS-2340MWG / SPS-2340BMWG / SPS-2340AMWG (RoHS Compliant)

40km / 1550 nm / 10G Multirate Digital Diagnostic SFP+ LC SINGLE-MODE TRANSCEIVER

FEATURES

- Support 9.95 Gbps to 11.1Gbps
- Complaint with SFP+ MSA
- Compliant to IEEE 802.3ae 10GBASE-ER
- Compliant with OC-192 IR-2 / SDH STM S-64.2b
- SFF-8472 Digital Diagnostic Function
- Temperature-stabilized 1550 nm EML Transmitter
- Distance up to 40 km at SM Fiber
- AC/AC Coupling according to MSA
- Single +3.3 V Power Supply
- Low Power consumption (max. 1.5W)
- RoHS 6/6 Compliant
- 0 to 70°C Operating: SPS-2340MWG
- -5 to 85°C Operating: SPS-2340BMWG
- -40 to 85°C Operating: SPS-2340AMWG
- Class 1 Laser International Safety Standard IEC-60825 Compliant

APPLICATIONS

- SONET OC-192 IR-2
  SDH STM S-64.2b
  SONET OC-192 IR-3
  SDH STM S-64.3b
  ITU-T G.709
- 10GBASE-ER / EW
- 40 km 10G Fibre Channel

DESCRIPTION

The SPS-2340MWG series single mode transceiver is small form factor pluggable module for bi-directional serial optical data communications such as SONET OC-192 / SDH STM-64, 10G Ethernet 10GBASE-ER/EW and 10G Fibre Channel. It is with the SFP+ 20-pin connector to allow hot plug capability. Digital diagnostic functions are available via an I^2C. This module is designed for single mode fiber and operates at a nominal wavelength of 1550 nm. The transmitter section uses a temperature-stabilized 1550 nm electrical-modulated laser (EML) and is a class 1 laser compliant according to International Safety Standard IEC-60825. The receiver section uses an integrated InGaAs detector preamplifier (IDP) mounted in an optical header and a limiting post-amplifier IC.

LASER SAFETY

This single mode transceiver is a Class 1 laser product. It complies with IEC-60825 and FDA 21 CFR 1040.10 and 1040.11. The transceiver must be operated within the specified temperature and voltage limits. The optical ports of the module shall be terminated with an optical connector or with a dust plug.

ORDER INFORMATION

P/No.	Bit Rate (Gb/s)	10G	Distance (km)	Wavelength (nm)	Package	Temp. (°C)	RoHS Compliant
SPS-2340MWG	9.95 to 11.3	Multirate*	40	1550 EML	SFP+ with DMI	0 to 70	Yes
SPS-2340BMWG	9.95 to 11.3	Multirate*	40	1550 EML	SFP+ with DMI	-5 to 85	Yes
SPS-2340AMWG	9.95 to 11.3	Multirate*	40	1550 EML	SFP+ with DMI	-40 to 85	Yes

*: multirate for SONET OC-192 IR2, OC-192 IR-3, 10GBASE-ER/EW, 10G Fibre Channel, ITU-T G.709, 10GBASE-ER/EW + FEC

Absolute Maximum Ratings					
Parameter	**Symbol**	**Min**	**Max**	**Units**	**Notes**
Storage Temperature	Tstg	-40	85	°C	
Relative Humidity	RH	5	85	%	Non-condensing
Operating Case Temperature	Topr	0	70	°C	SPS-2340MWG
		-5	85		SPS-2340BMWG
		-40	85		SPS-2340AMWG
Power Supply Voltage	Vcc	-0.5	3.6	V	
Receiver Input Optical Power	Mip		3	dBm	Average power

OPTOWAY TECHNOLOGY INC. No.38, Kuang Fu S. Road, Hu Kou, Hsin Chu Industrial Park, Hsin Chu, Taiwan 303
Tel: 886-3-5979798 Fax: 886-3-5979737
E-mail: sales@optoway.com.tw http: // www.optoway.com.tw 7/1/2011 V3.0

Recommended Operating Conditions					
Parameter	**Symbol**	**Min**	**Typ**	**Max**	**Units / Notes**
Power Supply Voltage	Vcc	3.135	3.3	3.465	V
Operating Case Temperature	Topr	0		70	°C / SPS-2340MWG
		-5		85	°C / SPS-2340BMWG
		-40		85	°C / SPS-2340AMWG
Relative Humidity	RH	5	85	%	Non-condensing
Power Supply Current	$I_{CC\ (TX+RX)}$		320	500	mA / SPS-2340MWG
			320	650	mA / SPS-2340A(B)MWG
Data Rate			9.95 / 10.3	11.3	Gb/s

Transmitter Optical Specifications (0°C < Topr < 70°C, 3.13V < Vcc < 3.47V)						
Parameter	**Symbol**	**Min**	**Typ**	**Max**	**Units**	**Notes**
Average Launch Power	$Po_{,\ Avg}$	-1		+2	dBm	1
Output Center Wavelength	λc	1530		1565	nm	
Output Spectrum Width	σ_λ			1	nm	-20 dB width
Side Mode Suppression Ratio	SMSR	30			dB	
Extinction Ratio	ER	8.2				
Relative Intensity Noise	RIN			-128	dB/Hz	
Average Launch Power of OFF Transmitter				-30	dBm	

1. Output power is power coupled into a 9/125 μm single-mode fiber.

Receiver Optical Specifications (0°C < Topr < 70°C, 3.13V < Vcc < 3.47V)						
Parameter	**Symbol**	**Min**	**Typ**	**Max**	**Units**	**Notes**
S Sensitivity @ 9.95 to 10.7 Gb/s	Sen1			-16	dBm	2
Receiver Overload	P_{MAX}	-1	---		dBm	
LOS -- Deasserted	LOS_D	---	---	-18	dBm	Transition: low to high
LOS -- Asserted	LOS_A	-28	---	---	dBm	Transition: high to low
Wavelength of Operation	λc	1530		1565	nm	

2. Averaged power; BER < 10^{-12} and PRBS 2^{31}-1.

Electrical Characteristics						
Parameter	**Symbol**	**Min**	**Typ**	**Max**	**Units**	**Notes**
High-Speed Signal (CML) Interface Specification						
Input Data Rate			9.95 / 10.3	11.3	Gb/s	
Differential Input Impedance	Rin		100		Ω	
Differential Data Input Amplitude		120		820	mVpp	Internally AC coupled
Output Data Rate			9.95 / 10.3	11.3	Gb/s	
Differential Output Impedance	Rout		100		Ω	
Differential Data Output Amplitude		340		850	mVpp	Internally AC coupled
Low-Speed Signal (LVTTL) Interface Specification						
Input High Voltage		2.0		Vcc+0.3	V	
Input Low Voltage		GND		0.8	V	
Output High Voltage		2.4		Vcc	V	
Output Low Voltage		GND		0.5	V	

CONNECTION DIAGRAM

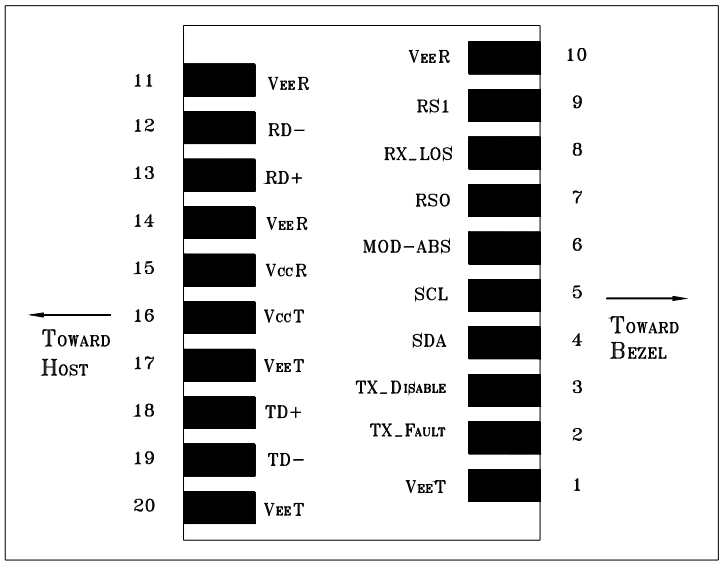

PIN	Signal Name	Description	PIN	Signal Name	Description
1	$V_{EE}T$	Transmitter Signal Ground	11	$V_{EE}R$	Receiver Signal Ground
2	TX_Fault	Transmitter Fault Indication. Logic "1" Output = Laser Fault. Logic "0" Output = Normal Operation	12	RD-	Inverse Receiver Data Out
3	TX_Disable	Logic "1" Input (or no connection) = Laser off, Logic "0" = Laser on.	13	RD+	Receiver Data Out
4	SDA	Modulation Definition 2 – Two wires serial ID Interface	14	$V_{EE}R$	Receiver Signal Ground
5	SDL	Modulation Definition 1 – Two wires serial ID Interface	15	$V_{CC}R$	Receiver Power – 3.3V±5%
6	MOD-ABS	Modulation Definition 0 – Ground in Module	16	$V_{CC}T$	Transmitter Power – 3.3V±5%
7	RS0	RX Rate Select (LVTTL). This pin has an internal 30k pulldown to ground. A signal on this pin will not affect module performance.	17	$V_{EE}T$	Transmitter Signal Ground
8	RX_LOS	Loss of Signal Out (OC).	18	TD+	Transmitter Data In
9	RS1	TX Rate Select (LVTTL). This pin has an internal 30k pulldown to ground. A signal on this pin will not affect module performance.	19	TD-	Inverse Transmitter Data In
10	$V_{EE}R$	Receiver Signal Ground	20	$V_{EE}T$	Transmitter Signal Ground

MODULE DEFINITION

Module Definition	PIN 4	PIN 5	PIN 6	Interpretation by Host
4	SDA	SCL	MOD-ABS	Serial module definition protocol

Module Definition 4 specifies a serial definition protocol. For this definition, upon power up, SDA and SDL appear as no connector (NC) and MOD-ABS is TTL LOW. When the host system detects this condition, it activates the serial protocol. The protocol uses the 2-wire serial CMOS E^2PROM protocol of the ATMEL AT24C01A/02/04 family of components.

RECOMMENDED CIRCUIT SCHEMATIC

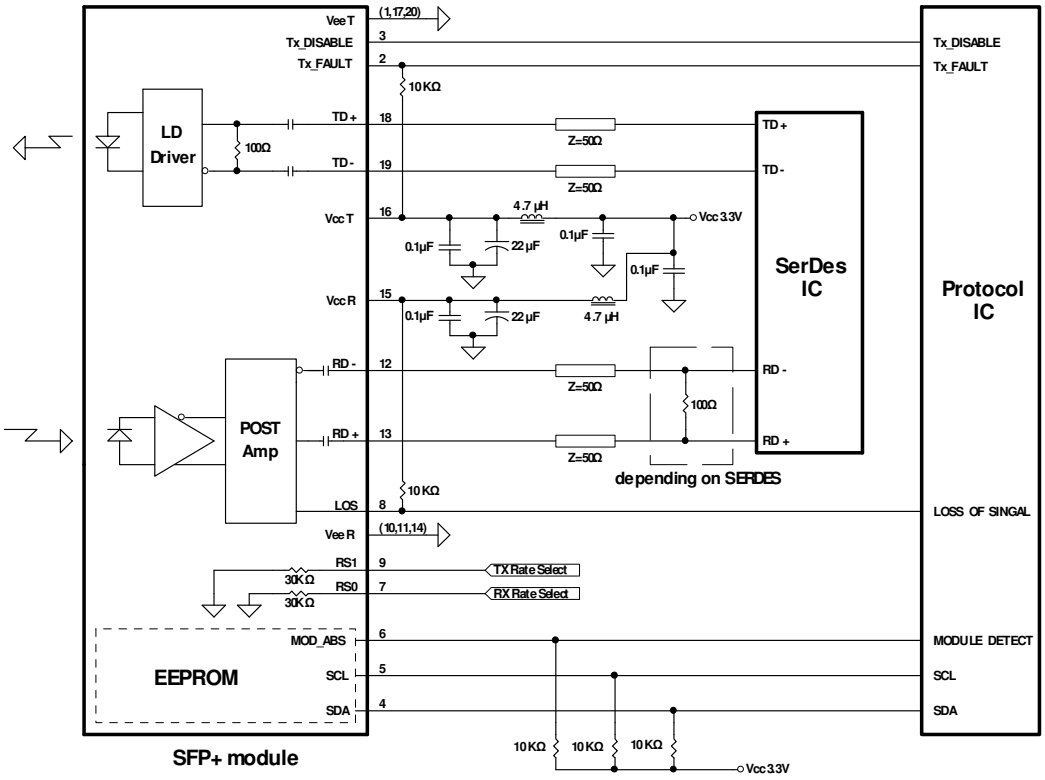

PACKAGE DIAGRAM

Units in mm

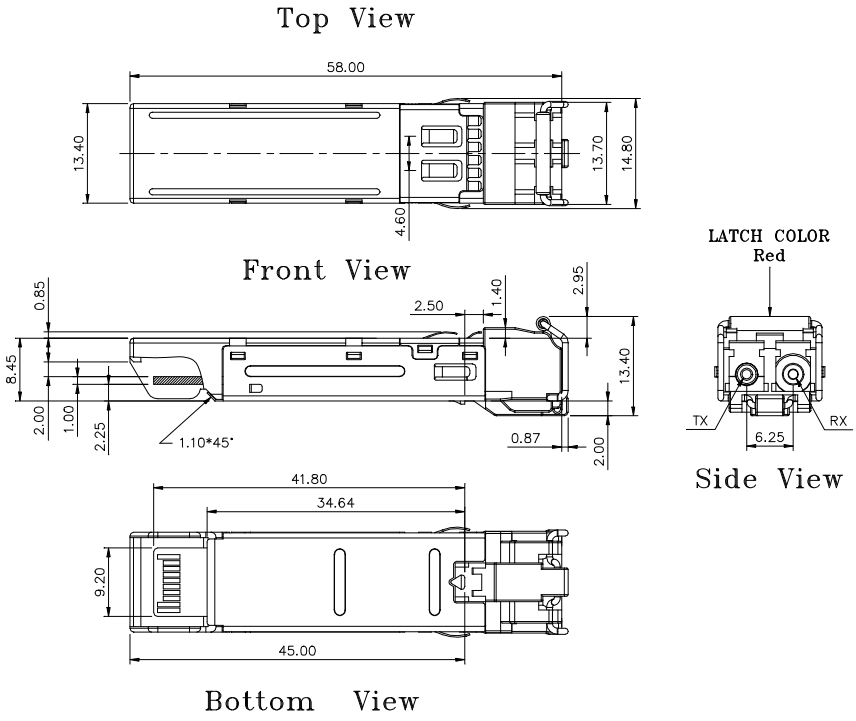

Note: Specifications subject to change without notice.

REVISION HISTORY

Version	Subject	Release Date
1.0	Initial datasheet	2010/4/1
2.0	1) Add SPS-2340BMWG for extended temperature version 2) Add SPS-2340AMWG for industrial temperature version	2010/12/1
3.0	Extended speed to 11.3 Gb/s	2011/7/1