SPM-9100WG (RoHS Compliant)

3.3V / 850 nm / 2.5 Gbps Digital Diagnostic SFP LC SINGLE-MODE TRANSCEIVER

FEATURES

- Hot-Pluggable SFP Footprint LC Optical Transceiver
- Small Form-Factor Pluggable (SFP) MSA compatible
- Compliant with Fiber Channel FC-PH-2 for 200-M5-SN-1 and 200-M6-SN-1
- Compliant with IEEE 802.3z Gigabit Ethernet 1000BASE-SX
- SFF-8472 Digital Diagnostic Function
- Link Distance at 2.5 Gbd
  150 m links with 62.5/125 µm MMF Cables
  300 m links with 50/125 µm MMF Cables
- Link Distance at 1.25 Gbd
  300 m links with 62.5/125 µm MMF Cables
  500 m links with 50/125 µm MMF Cables
- AC/AC Coupling according to MSA
- Single +3.3 V Power Supply
- RoHS Compliant
- -10 to 85°C Operation
- Class 1 Laser International Safety Standard IEC 60825 Compliant

APPLICATIONS

- Gigabit Ethernet Switches and Routers
- Fiber Channel Switch Infrastructure
- XDSL Applications
- Metro Edge Switching

DESCRIPTION

The SPM-9100WG series multi-mode transceivers is small form factor pluggable module for bi-directional serial optical data communications such as Gigabit Ethernet 1000BASE-SX and Fiber Channel FC-PH-2 for 200-M5-SN-1 and 200-M6-SN-1. It is with the SFP 20-pin connector to allow hot plug capability. Digital diagnostic functions are available via an I^2C series bus specified in the SFP MSA SFF-8472. This module is designed for multi-mode fiber and operates at a nominal wavelength of 850 nm. The transmitter section uses a Vertical Cavity Surface Emitted Laser (VCSEL) and is a Class 1 laser compliant according to International Safety Standard IEC 60825. The receiver section uses an integrated GaAs detector preamplifier (IDP) mounted in an optical header and a limiting post-amplifier IC.

LASER SAFETY

This multi-mode transceiver is a Class 1 laser product. It complies with IEC 60825 and FDA 21 CFR 1040.10 and 1040.11. The transceiver must be operated within the specified temperature and voltage limits. The optical ports of the module shall be terminated with an optical connector or with a dust plug.

ORDER INFORMATION

P/No.	Bit Rate (Gb/s)	SONET /SDH	Distance (m)	Wavelength (nm)	Package	Temp. (°C)	TX Power (dBm)	RX Sens. (dBm)	RoHS Compliant
SPM-9100WG	2.5/1.25		150/300**	850	LC SFP with DMI	-10 to 85	-4 to -9.5	-15	Yes

*: 150 meter for 62.5/125 µm MM fiber; 300 meter for 50/125 µm MM Fiber.

Absolute Maximum Ratings					
Parameter	**Symbol**	**Min**	**Max**	**Units**	**Notes**
Storage Temperature	Tstg	-40	85	°C	
Operating Case Temperature	Topr	-10	85	°C	Air flow 1m/sec
Power Supply Voltage	Vcc	-0.5	3.6	V	

Recommended Operating Conditions					
Parameter	**Symbol**	**Min**	**Typ**	**Max**	**Units / Notes**
Power Supply Voltage	Vcc	3.1	3.3	3.5	V
Case Operating Temperature	Topr	-10		85	°C / Air flow 1m/sec
Power Supply Current	$I_{CC\,(TX+RX)}$			250	mA
Data Rate		1000	2500		Mb/s

OPTOWAY TECHNOLOGY INC. No.38, Kuang Fu S. Road, Hu Kou, Hsin Chu Industrial Park, Hsin Chu, Taiwan 303
Tel: 886-3-5979798 Fax: 886-3-5979737
E-mail: sales@optoway.com.tw http: // www.optoway.com.tw

Transmitter Specifications (-10°C < Topr < 85°C, 3.1V < Vcc < 3.5V)						
Parameter	**Symbol**	**Min**	**Typ**	**Max**	**Units**	**Notes**
Optical						
Optical Transmit Power	Po	-9	---	-4	dBm	1
Output Center Wavelength	λ	830		860	nm	
Output Spectrum Width	Δλ	---	---	0.85	nm	RMS (σ)
Optical Modulation Amplitude	OMA	196			μW	2
Extinction Ratio	E_R		9	---	dB	
Optical Rise Time	t_r			160	ps	20 % to 80% Values
Optical Fall Time	t_f			160	ps	20 % to 80% Values
Relative Intensity Noise	RIN			-120	dB/Hz	
Electrical						
Data Input Current – Low	I_{IL}	-350			μA	
Data Input Current – High	I_{IH}			350	μA	
Differential Input Voltage	V_{IH} - V_{IL}	0.5		2.4	V	Peak-to-Peak
TX Disable Input Voltage – Low	$T_{DIS, L}$	0		0.5	V	3
TX Disable Input Voltage – High	$T_{DIS, H}$	2.0		Vcc	V	3
TX Disable Assert Time	T_{ASSERT}			10	μs	
TX Disable Deassert Time	$T_{DEASSERT}$			1	ms	
TX Fault Output Voltage -- Low	T_{FaultL}	0		0.5	V	4
TX Fault Output Voltage -- High	T_{FaultH}	2.0		Vcc+0.3	V	4

1. Output power is power coupled into a 62.5/125 μm MM fiber.
2. An OMA of 196 μW is approximately equal to an average power of -9 dBm assuming an Extinction Ratio of 9 dB.
3. There is an internal 4.7K to 10K ohm pull-up resistor to VccTX.
4. Open collector compatible, 4.7K to 10K ohm pull-up to Vcc (Host Supply Voltage).

Receiver Specifications (-10°C < Topr < 85°C, 3.1V < Vcc < 3.5V)						
Parameter	**Symbol**	**Min**	**Typ**	**Max**	**Units**	**Notes**
Optical						
Sensitivity	Sens			-15	dBm	5
Maximum Input Power	Pin	-3	0		dBm	
Signal Detect -- Asserted	Pa	---		-15	dBm	Transition: low to high
Signal Detect -- Deasserted	Pd	-30	---	---	dBm	Transition: high to low
Signal detect -- Hysteresis		1.0	---		dB	
Wavelength of Operation		700	---	900	nm	
Electrical						
Differential Output Voltage	V_{OH} – V_{OL}	0.6		2.0	V	
Output LOS Voltage -- Low	V_{OL}	0		0.8	V	6
Output LOS Voltage -- High	V_{OH}	2.0		Vcc+0.3	V	6

5. Measured at 2^7-1 PRBS at BER 1E-12.
6. Open collector compatible, 4.7K to 10K ohm pull-up to Vcc (Host Supply Voltage).

CONNECTION DIAGRAM

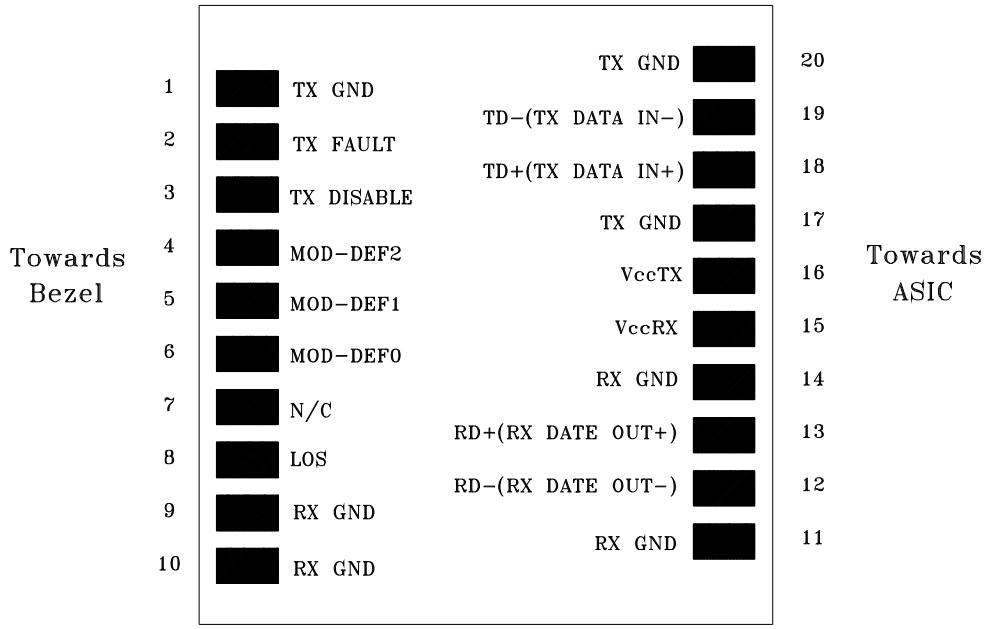

PIN	Signal Name	Description	PIN	Signal Name	Description
1	TX GND	Transmitter Ground	11	RX GND	Receiver Ground
2	TX Fault	Transmitter Fault Indication	12	RX DATA OUT-	Inverse Receiver Data Out
3	TX Disable	Transmitter Disable (Module disables on high or open)	13	RX DATA OUT+	Receiver Data Out
4	MOD-DFE2	Modulation Definition 2 – Two wires serial ID Interface	14	RX GND	Receiver Ground
5	MOD-DEF1	Modulation Definition 1 – Two wires serial ID Interface	15	Vcc RX	Receiver Power – 3.3V±5%
6	MOD-DEF0	Modulation Definition 0 – Ground in Module	16	Vcc TX	Transmitter Power – 3.3V±5%
7	N/C	Not Connected	17	TX GND	Transmitter Ground
8	LOS	Loss of Signal	18	TX DATA IN+	Transmitter Data In
9	RX GND	Receiver Ground	19	TX DATA IN-	Inverse Transmitter Data In
10	RX GND	Receiver Ground	20	TX GND	Transmitter Ground

Module Definition

Module Definition	MOD-DEF2 PIN 4	MOD-DEF1 PIN 5	MOD-DEF0 PIN 6	Interpretation by Host
4	SDA	SCL	LV-TTL Low	Serial module definition protocol

Module Definition 4 specifies a serial definition protocol. For this definition, upon power up, MOD-DEF(1:2) appear as no connector (NC) and MOD-DEF(0) is TTL LOW. When the host system detects this condition, it activates the serial protocol. The protocol uses the 2-wire serial CMOS E^2PROM protocol of the ATMEL AT24C01A/02/04 family of components.

RECOMMENDED CIRCUIT SCHEMATIC

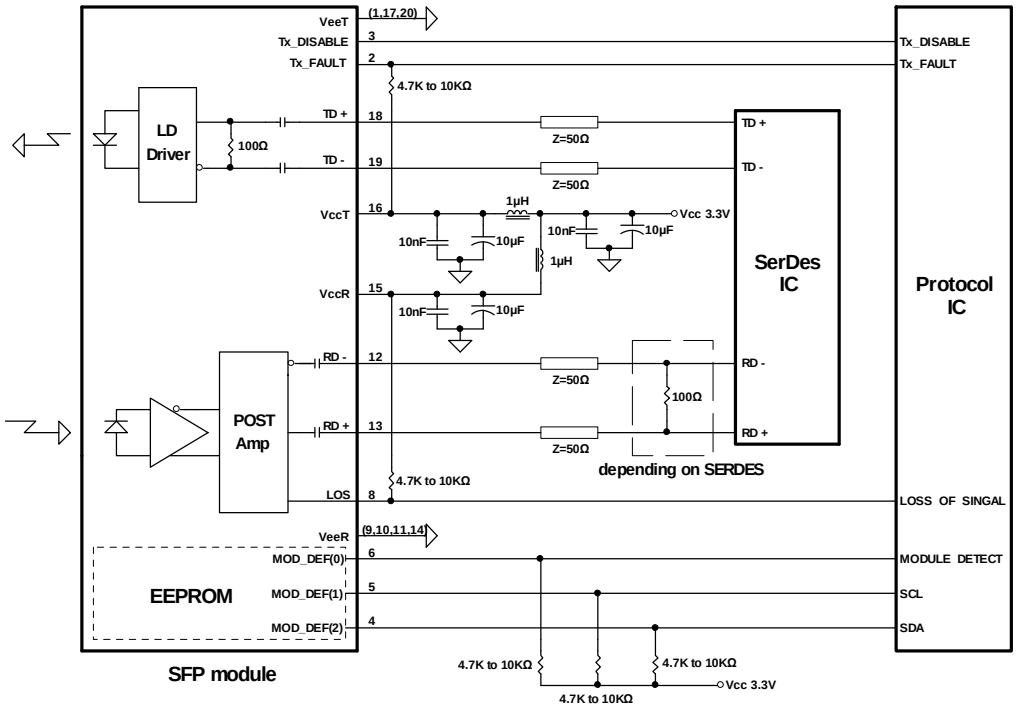

PACKAGE DIAGRAM

Units in mm

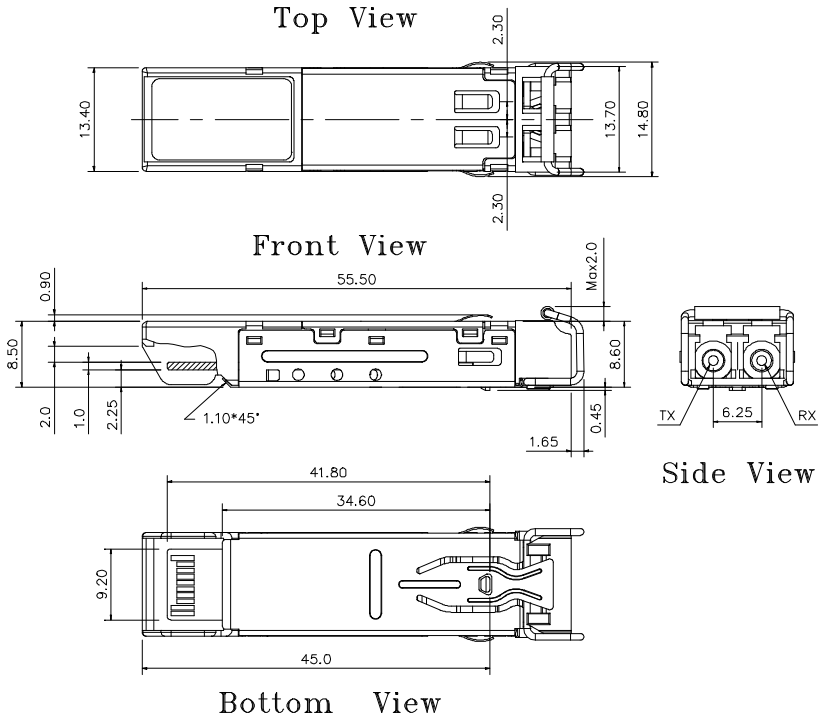

Note: Specifications subject to change without notice.