SPM-6100WG / SPM-6100BWG / SPM-6100AWG (RoHS Compliant)

16G FC / 850 nm Digital Diagnostic LC Multi-Mode SFP+ TRANSCEIVER

FEATURES

- Up to 14.025 Gb/s Bi-directional Data Link
- Complaint to SFP+ MSA
- Compliant with 16G FC 1600-SN
- Compliant with 8G, 4G Fibre Channel
- Compliant with 10G Fibre Channel
- Built-in CDR with Shut-off Control
- Link Distance at 14.025 Gbd
  35 m links with 50/125 µm MMF Cables
  100 m links with OM3 MMF Cables
  125 m links with OM4 MMF Cables
- SFF-8472 Digital Diagnostic Function
- Single +3.3 V Power Supply
- RoHS 6/6 Compliant
- 0 to 70°C Operation: SPM-6100WG
- -5 to 85°C Operation: SPM-6100BWG
- -40 to 85°C Operation: SPM-6100AWG
- Class 1 Laser International Safety Standard IEC 60825 Compliant
- Enhanced EWRAP, OWRAP operational features

APPLICATIONS

- Multi-rate 16x/8x/4x Fiber Channel
- 10G FCoE

DESCRIPTION

The SPM-6100WG series multi-mode transceivers is SFP+ module for bi-directional serial optical data communications such as 16x/8x/4x Fibre Channel. It is with the SFP+ 20-pin connector to allow hot plug capability. Digital diagnostic functions are available via an I^2C. This module is designed for multi-mode fiber and operates at a nominal wavelength of 850 nm. The transmitter section uses a Vertical Cavity Surface Emitted Laser (VCSEL) and is a Class 1 laser compliant according to International Safety Standard IEC 60825. The receiver section uses an integrated GaAs detector preamplifier (IDP) mounted in an optical header and a rate selection clock data recovery (CDR) IC.

LASER SAFETY

This multi-mode transceiver is a Class 1 laser product. It complies with IEC 60825 and FDA 21 CFR 1040.10 and 1040.11. The transceiver must be operated within the specified temperature and voltage limits. The optical ports of the module shall be terminated with an optical connector or with a dust plug.

ORDER INFORMATION

P/No.	Bit Rate (Gb/s)	FC	Distance (m)	Wavelength (nm)	Package	Temp. (°C)	RoHS Compliant
SPM-6100WG	14.025	16G / 8G / 4G	35/100/125*	850 VCSEL	SFP+ with DMI	0 to 70	Yes
SPM-6100BWG	14.025	16G / 8G / 4G	35/100/125*	850 VCSEL	SFP+ with DMI	-5 to 85	Yes
SPM-6100AWG	14.025	16G / 8G / 4G	35/100/125*	850 VCSEL	SFP+ with DMI	-40 to 85	Yes

*: 35m for OM2 MMF , 100m for OM3 MMF and 125 m for OM4 MMF. All tested at 14.025 Gb/s.

OPTOWAY TECHNOLOGY INC. No.38, Kuang Fu S. Road, Hu Kou, Hsin Chu Industrial Park, Hsin Chu, Taiwan 303
Tel: 886-3-5979798 Fax: 886-3-5979737
E-mail: sales@optoway.com.tw http: // www.optoway.com.tw 2011/12/1 V2.0

Absolute Maximum Ratings					
Parameter	**Symbol**	**Min**	**Max**	**Units**	**Notes**
Storage Temperature	Tstg	-40	85	°C	
Operating Case Temperature	Topr	0	70	°C	SPM-6100WG
		-5	85		SPM-6100BWG
		-40	85		SPM-6100AWG
Operating Relative Humidity	RH	0	85	%	Non condensing
Power Supply Voltage	Vcc	0	4	V	

Recommended Operating Conditions					
Parameter	**Symbol**	**Min**	**Typ**	**Max**	**Units / Notes**
Power Supply Voltage	Vcc	3.14	3.3	3.46	V
Operating Case Temperature	Topr	0		70	°C / SPM-6100WG
		-5		85	°C / SPM-6100BWG
		-40		85	°C / SPM-6100AWG
Power Supply Current	$I_{CC\ (TX+RX)}$			290	mA / 1
Data Rate		4.25	14.025		Gb/s

1. With established link.

Transmitter Optical Specifications (0^oC < Topr < 70^oC, 3.13V < Vcc < 3.47V)						
Parameter	**Symbol**	**Min**	**Typ**	**Max**	**Units**	**Notes**
Average Launch Power	$Po_{,\ Avg}$	-7.8			dBm	1 / Average
Output Center Wavelength	λc	840	850	860	nm	
Output Spectrum Width	σ_λ			0.59	nm	RMS (σ)
Optical Modulation Amplitude @4.25 Gb/s	OMA	247			μW	
Optical Modulation Amplitude @8.5 Gb/s	OMA	302			μW	
Optical Modulation Amplitude @14.025 Gb/s	OMA	331			μW	
Vertical Eye Closure Penalty @14.025 Gb/s	CEVPQ			2.56	dB	
Relative Intensity Noise	RIN			-128	dB/Hz	

1. Max Po: Class 1 Laser Safety limit per CDRH and IEC/EN 60825. Output power is power coupled into a 50/125 μm multi-mode fiber.

Receiver Optical Specifications (0^oC < Topr < 70^oC, 3.13V < Vcc < 3.47V)						
Parameter	**Symbol**	**Min**	**Typ**	**Max**	**Units**	**Notes**
Receiver OMA Sensitivity @4.25 Gb/s	RxSENS			61	μW	2
Receiver OMA Sensitivity @8.5 Gb/s	RxSENS			76	μW	2
Receiver OMA Sensitivity @14.025 Gb/s	RxSENS			89	μW	2
Stress Receiver OMA Sensitivity @14.025 Gb/s	Sens		---	-7.7	dBm	2
Receiver Overload	P_{MAX}	0	---		dBm	
LOS -- Deasserted	LOS_D	---	---	-13	dBm	Transition: low to high
LOS -- Asserted	LOS_A	-24	---	---	dBm	Transition: high to low
Wavelength of Operation	λc	770		860	nm	
Optical Return Loss	ORL			-12	dB	

2. Measured with worst ER; BER < 10^{-12} and PRBS 2^{31}-1.

Electrical Characteristics						
Parameter	**Symbol**	**Min**	**Typ**	**Max**	**Units**	**Notes**
High-Speed Signal (CML) Interface Specification						
Input Data Rate		4.25	14.025		Gb/s	
Differential Input Impedance	Rin		100		Ω	
Differential Data Input Amplitude		150		700	mVpp	Internally AC coupled
Output Data Rate		4.25	14.025		Gb/s	
Differential Output Impedance	Rout		100		Ω	
Differential Data Output Amplitude		350	600	700	mVpp	Internally AC coupled
Low-Speed Signal (LVTTL) Interface Specification						
Input High Voltage		2.0		Vcc+0.3	V	
Input Low Voltage		GND		0.8	V	
Output High Voltage		2.4		Vcc	V	
Output Low Voltage		GND		0.5	V	

LINK LENGTH

Parameter	Symbol	Min	Typ	Max	Units	Note
Fiber Length on 50/125 μm MMF	L			150 50 35	m	1 2 3
Fiber Length on 50/125 μm high-bandwidth (OM3) MMF	L			380 150 100	m	1 2 3

Note: 1. At 4.25 Gb/s Fibre Channel data rate.
2. At 8.5 Gb/s Fibre Channel data rate.
3. At 14.025 Gb/s Fibre Channel data rate.

CONNECTION DIAGRAM

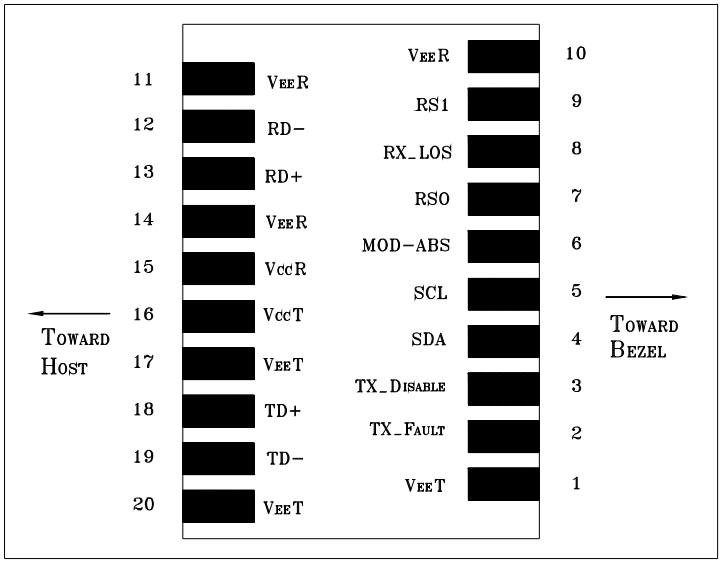

PIN	Signal Name	Description	PIN	Signal Name	Description
1	$V_{EE}T$	Transmitter Signal Ground	11	$V_{EE}R$	Receiver Signal Ground
2	TX_Fault	Transmitter Fault Indication. Logic "1" Output = Laser Fault. Logic "0" Output = Normal Operation	12	RD-	Inverse Receiver Data Out
3	TX_Disable	Logic "1" Input (or no connection) = TX off, Logic "0" = TX on.	13	RD+	Receiver Data Out
4	SDA	Modulation Definition 2 – Two wires serial ID Interface	14	$V_{EE}R$	Receiver Signal Ground
5	SDL	Modulation Definition 1 – Two wires serial ID Interface	15	$V_{CC}R$	Receiver Power – 3.3V±5%
6	MOD-ABS	Modulation Absent, connected to $V_{EE}T$ or $V_{EE}R$ in the module.	16	$V_{CC}T$	Transmitter Power – 3.3V±5%
7	RS0	RX Rate Select: This pin has an internal 30k pulldown to ground. A signal on this pin will not affect module performance.	17	$V_{EE}T$	Transmitter Signal Ground
8	RX_LOS	Loss of Signal Out (OC).	18	TD+	Transmitter Data In
9	RS1	TX Rate Select. This pin has an internal 30k pulldown to ground. A signal on this pin will not affect module performance.	19	TD-	Inverse Transmitter Data In
10	$V_{EE}R$	Receiver Signal Ground	20	$V_{EE}T$	Transmitter Signal Ground

MODULE DEFINITION

Module Definition	PIN 4	PIN 5	PIN 6	Interpretation by Host
4	SDA	SCL	MOD-ABS	Serial module definition protocol

Module Definition 4 specifies a serial definition protocol. For this definition, upon power up, SDA and SDL appear as no connector (NC) and MOD-ABS is TTL LOW. When the host system detects this condition, it activates the serial protocol. The protocol uses the 2-wire serial CMOS E^2PROM protocol of the ATMEL AT24C01A/02/04 family of components.

RECOMMENDED CIRCUIT SCHEMATIC

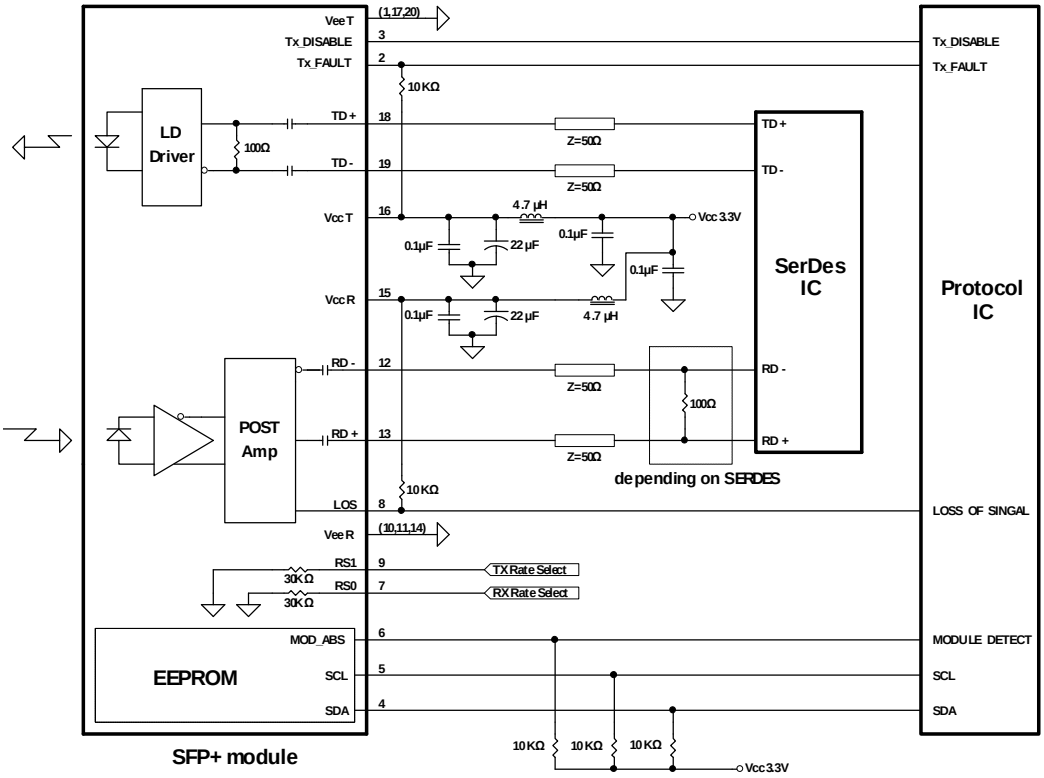

PACKAGE DIAGRAM

Units in mm

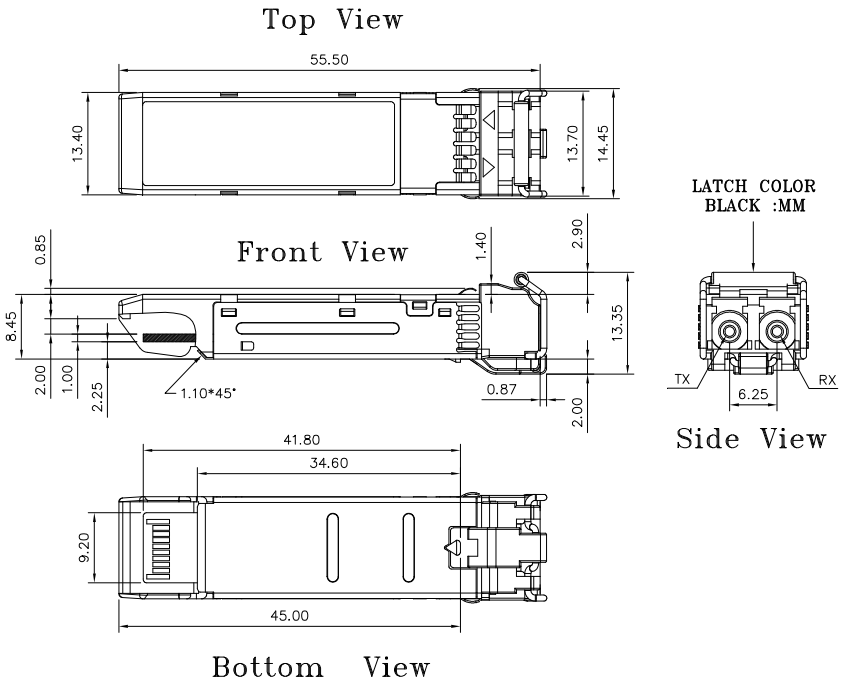

Note: Specifications subject to change without notice.

WRAP OPERATION FUNCTIONS - SOFT CONTROL (Address A2h, Byte 111).

To assist with local host or remote diagnostic and optimization sequences, electrical and optical wrap functions can be enabled. Optical wrap (OWRAP) takes the received optical signal through CDRs and retransmits it optically out. Electrical wrap (EWRAP) takes the received electrical signal through CDRs and retransmits it electrically out. Optional forward functions can be transmitted outbound the wrapped information via i2c control.

Byte	Bit	Name	Description
111	4-7	Reserved	Reserved.
	3	OWRAP Forward Enable Bit	When set in combination with OWRAP Enable, OWRAP Forward routes incoming SFP+ Rx optical data to both the Tx optical output and the Rx electrical output. Enabling sets bit 2 and clears all other bits in byte 111.
	2	OWRAP Enable Bit	When set, OWRAP routes incoming SFP+ Rx optical data to the Tx optical output. Enabling clears all other bits in byte 111.
	1	EWRAP Forward Enable Bit	When set in combination with EWRAP Enable, EWRAP Forward routes incoming SFP+ Tx electrical data to both Rx electrical output and Tx optical output. Enabling sets bit 0 and clears all other bits in byte 111.
	0	EWRAP Enable Bit	When set, EWRAP Enable routes incoming SFP+ Tx electrical data to the Rx electrical output. Enabling clears all other bits in byte 111.

OWRAP FORWARD ENABLE MODE (I2C CONTROLLED)

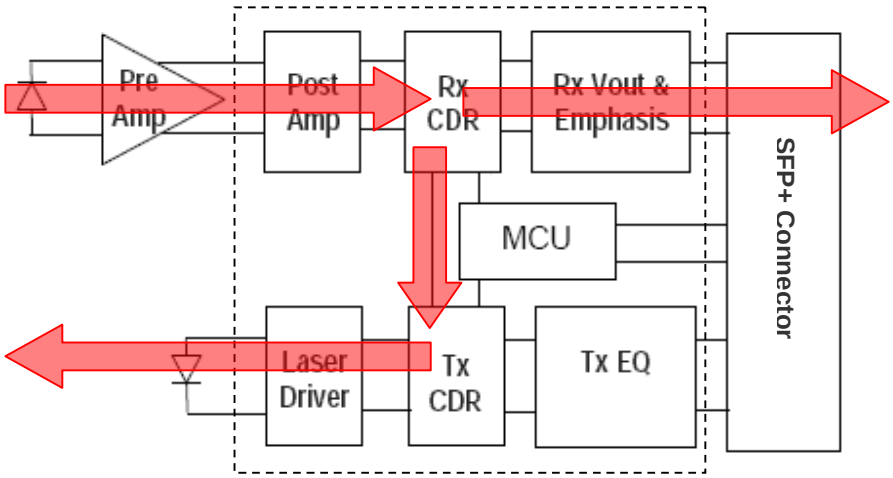

OWRAP ENABLE MODE (I2C CONTROLLED)

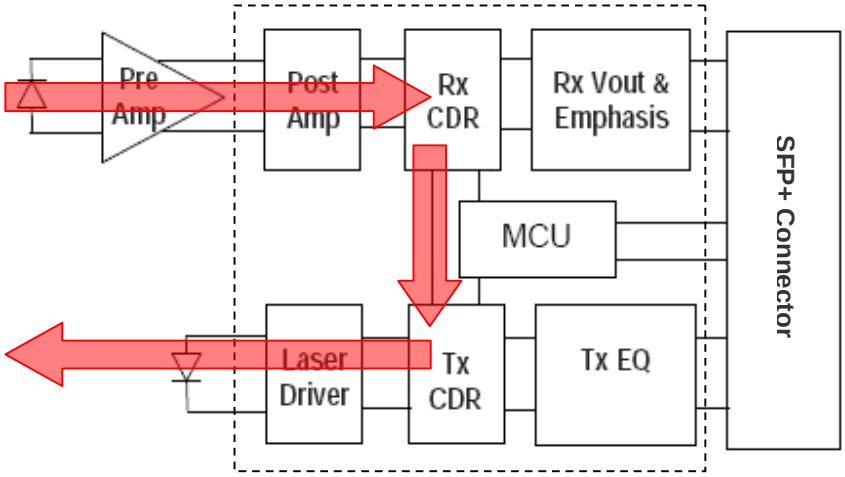

EWRAP FORWARD ENABLE MODE (I2C CONTROLLED)

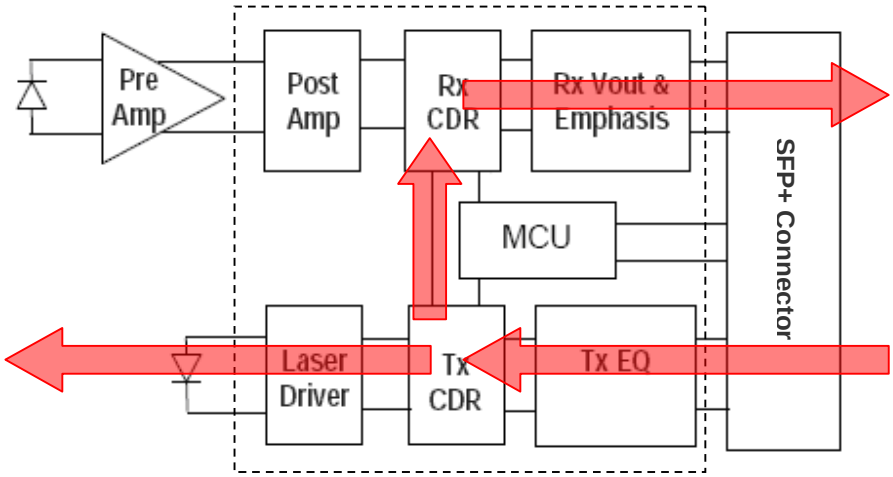

EWRAP ENABLE MODE (I2C CONTROLLED)

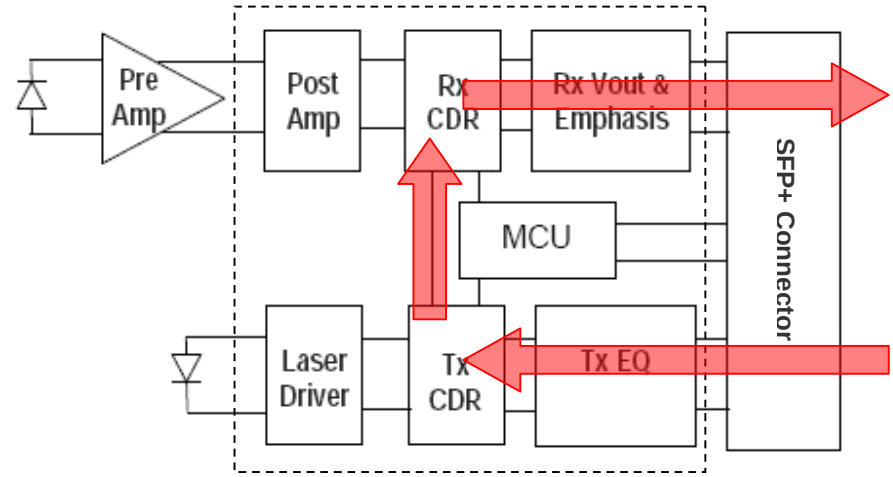

EEPROM Series ID Memory Contents (Address A0h)

Addr.	Hex	ASCII	Note	Addr.	Hex	ASCII	Note	Addr.	Hex	ASCII	Note	Addr.	Hex	ASCII	Note
0	03		SFP+	32	20			64	00		Uncooled Tx,	96	00		Vendor
1	04			33	20			65	1A		Txdis, Txfault, LOS enable	97	00		specific EEPROM
2	07		LC	34	20			66	00		Up bit rate	98	00		
3	10		10G Base-SR	35	20			67	00		Low bit rate	99	00		
4	00			36	00		NA	68			Serial number:	100	00		
5	00			37	00		Vendor IEEE	69			each piece with	101	00		
6	00			38	0E		OUI	70			different serial	102	00		
7	60		Short (S) and Intermediate (I) Distance	39	FA			71			number	103	00		
8	40		Shortwave Laser w/o OFC (SN)	40	53	S	Part Number	72				104	00		
9	0C		Multimode (M6, M5, M5E)	41	50	P		73				105	00		
10	F0		1600/1200/ 800/400 Mbytes/sec	42	4D	M		74				106	00		
11	06		64B/66B	43	2D	-		75				107	00		
12	8C		14.025Gbps	44	36	6		76				108	00		
13	00			45	31	1		77				109	00		
14	00			46	30	0		78				110	00		
15	00			47	30	0		79				111	00		
16	04		OM2 50/125um MMF, 35m	48	57	W		80				112	00		
17	02		OM1 62.5/125um MMF, 15m	49	47	G		81				113	00		
18	00			50	20			82				114	00		
19	0A		OM3 50/125um MMF, 100m	51	20			83				115	00		
20	4F	O	Vendor name	52	20			84			Date Code	116	00		
21	50	P		53	20			85				117	00		
22	54	T		54	20			86				118	00		
23	4F	O		55	20			87				119	00		
24	57	W		56	30	0	Revision,	88				120	00		
25	41	A		57	30	0	depended on	89				121	00		
26	59	Y		58	30	0	version	90				122	00		
27	20			59	31	1		91				123	00		
28	20			60	03		850 nm	92	68		Monitoring	124	00		
29	20			61	52			93	F0		Soft Control and Monitoring	125	00		
30	20			62	00		Reserved	94	05		SFF-8472V11.0	126	00		
31	20			63			Checksum 0-62	95			Checksum 64-94	127	00		

EEPROM Series ID Memory Contents (Address A2h)

Addr.	Hex	Note	Addr.	Hex	Note	Addr.	Hex	Note	Addr.	Hex	Note
0	4B	Temp. High Alarm (75°C)	32	31	Rx Power High Alarm (1dBm)	64	00	For External Cal.	96		Real Time Temp. MSB
1	00		33	2D		65	00	For External Cal.	97		Real Time Temp. LSB
2	FB	Temp. Low Alarm(-5°C)	34	02	Rx Power Low Alarm (-12.5dBm)	66	00	For External Cal.	98		Real Time Vcc MSB
3	00		35	32		67	00	For External Cal.	99		Real Time Vcc LSB
4	49	Temp. High Warming(73°C)	36	27	Rx Power High Warming (0dBm)	68	3F	For External Cal.	100		Real Time Tx Bias MSB
5	00		37	10		69	80	For External Cal.	101		Real Time Tx Bias LSB
6	00	Temp. Low Warming (0°C)	38	03	Rx Power Low Warming(-10.5dBm)	70	00	For External Cal.	102		Real Time Tx Pwr MSB
7	00		39	7B		71	00	For External Cal.	103		Real Time Tx Pwr LSB
8	8C	Voltage High Alarm (3.6V)	40	00	Reserved	72	00	For External Cal.	104		Real Time Rx Pwr MSB
9	A0		41	00	Reserved	73	00	For External Cal.	105		Real Time Rx Pwr LSB
10	75	Voltage Low Alarm(3.0V)	42	00	Reserved	74	00	For External Cal.	106		Reserved
11	30		43	00	Reserved	75	00	For External Cal.	107		Reserved
12	88	Voltage High Warming(3.5V)	44	00	Reserved	76	01	For External Cal.	108		Reserved
13	B8		45	00	Reserved	77	00	For External Cal.	109		Reserved
14	79	voltage Low Warming (3.1V)	46	00	Reserved	78	00	For External Cal.	110		Tx Dis, Tx Fault, Rx Los
15	18		47	00	Reserved	79	00	For External Cal.	111		OWRAP, EWRAP
16	27	Tx Bias High Alarm(20mA)	48	00	Reserved	80	01	For External Cal.	112		Alarm Flag
17	10		49	00	Reserved	81	00	For External Cal.	113		Alarm Flag/Reserved
18	01	Tx BiasLow Alarm(1mA)	50	00	Reserved	82	00	For External Cal.	114		Reserved
19	F4		51	00	Reserved	83	00	For External Cal.	115		Reserved
20	1D	Tx Bias High Warming(15mA)	52	00	Reserved	84	01	For External Cal.	116		Warming Flag
21	4C		53	00	Reserved	85	00	For External Cal.	117		Warming Flag/Reserved
22	03	Tx Bias Low Warming(2mA)	54	00	Reserved	86	00	For External Cal.	118		Reserved
23	E8		55	00	Reserved	87	00	For External Cal.	119		Reserved
24	27	Tx Power High Alarm (0dBm)	56	00	For External Cal.	88	01	For External Cal.	120		Vendor Specific
25	10		57	00	For External Cal.	89	00	For External Cal.	121		
26	05	Tx Power Low Alarm(-8.8dBm)	58	00	For External Cal.	90	00	For External Cal.	122		
27	26		59	00	For External Cal.	91	00	For External Cal.	123		
28	1F	Tx Power High Warming(-1dBm)	60	00	For External Cal.	92	00	For External Cal.	124		
29	07		61	00	For External Cal.	93	00	For External Cal.	125		
30	06	Tx Power Low Warming (-7.8dBm)	62	00	For External Cal.	94	00	For External Cal.	126		
31	7C		63	00	For External Cal.	95		Check Sum	127		

Note: Address 128 – 247: customer R/W eeprom. Address 248 – 255: Vendor Specific.

Note: Specifications subject to change without notice.

REVISION HISTORY

Version	Subject	Release Date
1.0	Initial datasheet	2011/7/1
2.0	Add auto rate selection for transmitter and receiver	2011/12/1