Low-side Switch ICs [Surface-mount 4-circuits] SPF5009 (under development)

Features

- DMOS 4ch output
- Allows ON/OFF using C-MOS logic level
- Built-in over current and thermal protection circuit and diagnostic function to detect open load
- Built-in output status signals (over current, over heat and open load)

Absolute Maximum Ratings

(Ta=25°C)

Parameter	Symbol	Ratings	Unit	Conditions
Power supply voltage	V_B	40	V	
Output terminal voltage (DC)	V_{OUT}	50	V	
Output terminal voltage (pulse)	V_{OUT}	Output clamping (max 70V)	V	
Output current (DC)	I_{OUT}	±2.9	A	
Output current (pulse)	I_{OUT}	Over current protection starting current	A	
Input terminal voltage	$V_{(IN, SEL, B/U)}$	–0.5 to +6.5	V	
Diag output source current	V_{DIAG}	6.5	V	
Diag output voltage	I_{DIAG}	5	mA	
Power Dissipation	P_D	2.8	W	
Storage temperature	Tstg	–40 to +150	°C	
Channel temperature	Tch	150	°C	
Output avalanche capability	E_{AV}	80	mJ	Single pulse

Electrical Characteristics

(V_B =14V, Ta= 25°C unless otherwise specified)

Parameter	Symbol	Ratings			Unit	Conditions
		min	typ	max		
Power supply voltage	$V_{B\ (opr)}$	5.5		40	V	
Quiescent circuit current	I_q		9	12	mA	V_B=14V, V_{IN}=0V
Operating circuit current	I_d		12	15	mA	V_B=14V, V_{IN}=5V (all inputs)
Input voltage (1 to 4, SEL, B/U)	$V_{IN\ (H)}$	3.5		6.5	V	V_B=14V, V_O=1A
	$V_{IN\ (L)}$	–0.5		1.5	V	V_B=14V
Input current (single circuit) (1 to 4, SEL, B/U)	$I_{IN\ (H)}$			200	μA	V_B=14V, V_{IN}=5V
	$I_{IN\ (L)}$			30	μA	V_B=14V, V_{IN}=0V
Output ON resistance	$R_{DS\ (ON)}$			0.18	Ω	V_B=14V, I_O=1A
Output clamp voltage	$V_{OUT\ (clamp)}$	60	65	70	V	V_B=14V, I_O=1A
Output leak current	I_{OH}			50	μA	V_B=14V, V_O=50V
Forward voltage of output stage diode	V_F			1.5	V	I_F=1A
Output moniter threshold voltage	$V_{th}M$			2	V	V_B=14V
DIAG output voltage	$V_{DIAG\ (H)}$	6.4		6.5	V	V_B=14V, V_{DIAG}=6.5V
	$V_{DIAG\ (L)}$			0.5	V	V_B=14V, I_{DIAG}=5mA
DIAG output leak current	I_{DH}			10	μA	V_B=14V, V_{DIAG}=6.5V
Thermal shutdown operating temperature	T_{TSD}	151	165		°C	V_B=14V
Overcurrent protection starting current	I_S	3.0			A	V_B=14V
Output transfer time	T_{ON}			12	μs	V_B=14V, R_L=14Ω, I_O=1A
	T_{OFF}			8	μs	V_B=14V, R_L=14Ω, I_O=1A
Output rise time	T_r			5	μs	V_B=14V, R_L=14Ω, I_O=1A
Output fall time	T_f			10	μs	V_B=14V, R_L=14Ω, I_O=1A
DIAG output transfer time	t_{DON}			12	μs	V_B=14V, R_L=14Ω, I_O=1A
	t_{DOFF}			8	μs	V_B=14V, R_L=14Ω, I_O=1A

External Dimensions (unit: mm)

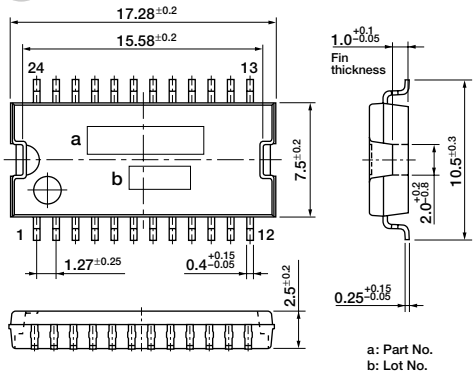

Equivalent Circuit Diagram

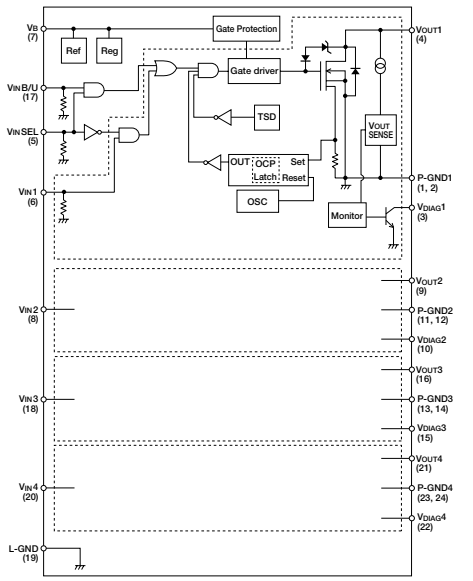

Circuit Example

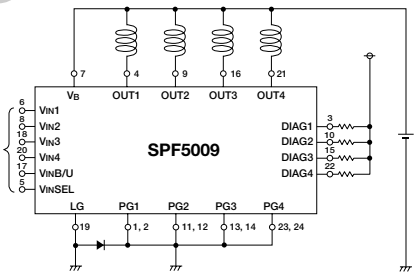

Timing Chart

