TECHNICAL DATA
DATASHEET 5023, Rev -

Programmable DC Solid State Power Controller Module

Description:

These Solid State Power Controller (SSPC) Modules are designed to operate without any heatsink requirements. They are microcontroller-based Solid State Relays rated up to 30A designed to be used in high reliability 28V DC applications. These modules have integrated current sensing with no derating over the full operating temperature range. These modules are the electronic equivalent to electromechanical circuit breakers with isolated control and status. This series is supplied in 6 SSPC families, with each family being programmable over a 5:1 current range.

SPDP05D28ER: Programmable from 1A to 5A

SPDP10D28ER: Programmable from 2A to 10A

SPDP15D28ER: Programmable from 3A to 15A

SPDP20D28ER: Programmable from 4A to 20A

SPDP25D28ER: Programmable from 5A to 25A

SPDP30D28ER: Programmable from 6A to 30A

Compliant Documents & Standards:

MIL-STD-1275B, Notice1	Characteristics of 28 Volt DC Electrical Systems in Military Vehicles-4/20/04
MIL-STD-704F	Aircraft Electrical Power Characteristics 12 March 2004
MIL-STD-217F, Notice 2	Reliability Prediction of Electronic Equipment 28 Feb 1995

Module Features:

- No additional heat sinking or external cooling required!
- Extremely Low Power, No Derating Over the Full Temperature Range
- Low Weight (20 gms)
- Same Pin Out as Industry Standard SSPCs in a Smaller Outline
- Epoxy Shell Construction
- Solid State Reliability
- High Power Density

Electrical Features (SPDPxxD28ER Series):

- 28VDC Input with Very Low Voltage Drop; 64mV, typ. @15A for SPDP25D28ER
- True I^2t Protection up to 10X rating with Nuisance Trip Suppression
- Instant Trip Protection (50 μsec typ) for Loads Above 10X rating
- Unlimited Interrupt Capability; Repetitive Fault Handling Capability
- Thermal Memory
- Internally Generated Isolated Supply to Drive the Switch
- Low Bias Supply Current: 25 mA typ @ 5V DC
- High Control Circuit Isolation: 750V DC Control to Power Circuit
- Soft Turn-On to Reduce EMC Issues
- EMI Tolerant
- Module Reset with a Low Level Signal; Reset Circuit is Trip-Free
- TTL/CMOS Compatible, Optically Isolated, Input and Outputs
- Schmitt-Trigger Control Input for Noise Immunity

Table 1 - Electrical Characteristics (at 25 °C and V_{bias} = 5.0V DC unless otherwise specified)

Control & Status (TTL/CMOS Compatible)	
BIAS (Vcc)	5.0V DC Nominal, 6.5V DC Absolute Maximum 4.5V to 5.5 VDC
BIAS (Vcc) Current	25 mA typ 30 mA, max
GATE Status, Load Status Signals	V_{oh}=3.7V, min, at I_{oh}=-20mA V_{ol}=0.4V, max, at I_{ol}=20mA
CONTROL Signal V_{T+} (Positive-going input threshold voltage) V_{T-} (Negative-going input threshold voltage) ΔV_T Hysteresis (V_T+ V_T−)	 2.0V, min, 3.5V, max 1.2V, min, 2.3V, max 0.6V, min, 1.4V, max
Reset	Cycle CONTROL Signal

Power	
Input Voltage – Continuous – Transient	0 to 40V DC, 55V DC Absolute Maximum +600V or –600V Spike (≤ 10 µs)
Power Dissipation	See Table 5
Current	See Table 5 See Figure 1, Trip Curve
Max Voltage Drop	See Table 5
Max current without tripping	110% min

Trip time	See Figure 1, Trip Curve
Output Rise Time (turn ON)	110 µsec typ
Output Fall Time under normal turn-off	110 usec typ
Output Fall Time under Fault	50 usec typ
Min Load Requirement	Nil

Protection	
Short Circuit Protection	Unlimited
Instant Trip	800%, min; 1200%, max

Table 2 - Physical Characteristics

Temperature	
Operating Temperature	T_A = -55 °C to +100 °C
Storage Temperature	T_A = -55 °C to +125 °C

Environmental	
Altitude	Up to 30,000 ft Can be installed in an unpressurized area
Case Dimensions	1.825”L x 1.25”W x 0.38”H
Operating Orientation	Any
Weight	20 grams typ
MTBF (Estimate: MIL STD 217F)	1.1 Mhrs at 25°C Full load

Figure 1 - Trip Curve

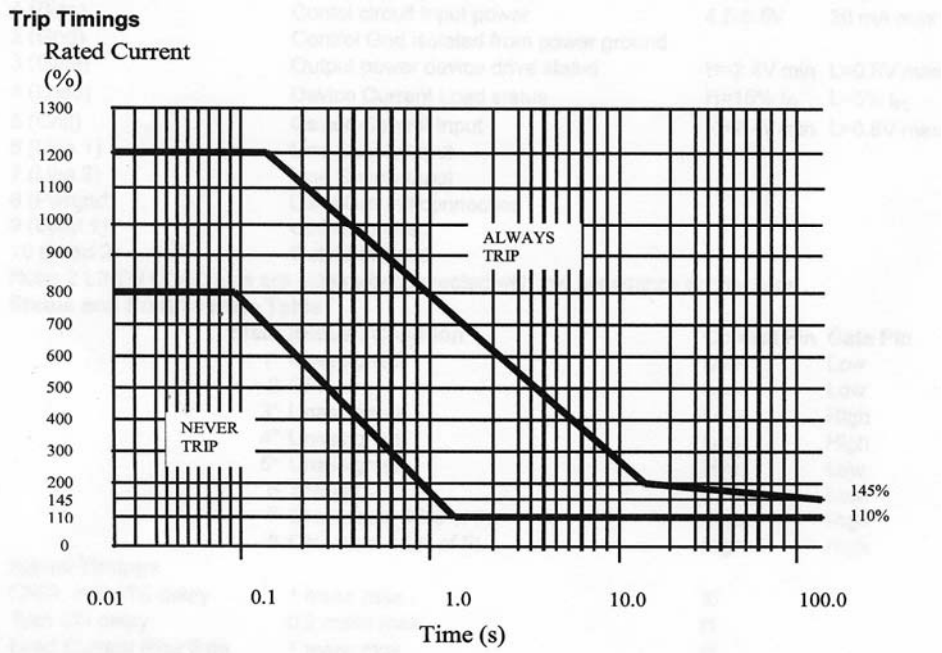

Figure 2 - Timing Diagram

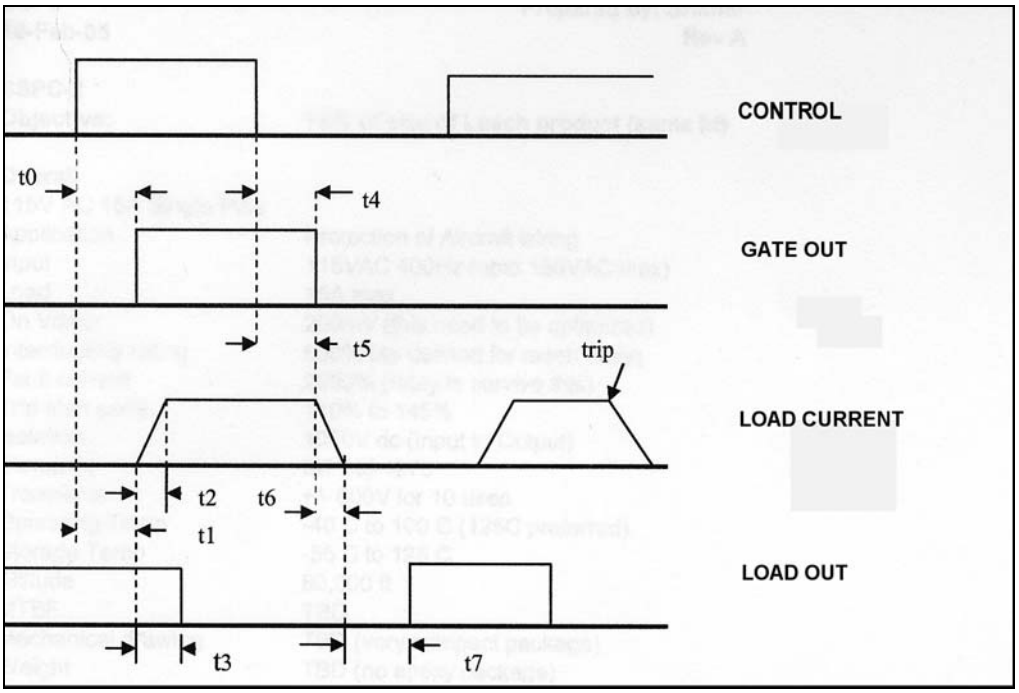

Table 3 - Signal Timing – (-55 °C to 100 °C @ LINE = 28V DC)

Parameter	Symbol	Min	Max	Units
CONTROL to GATE Status Delay for Turn On	t0		1	ms
Turn ON Delay	t1		200	µs
Load Current Rise Time	t2	50	200	µs
Turn ON to LOAD Status Delay	t3		1	ms
CONTROL to GATE Status Delay for Turn Off	t4		1	ms
Turn OFF Delay	t5		200	µs
Load Current Fall Time	t6	50	200	µs
Turn OFF to LOAD Delay	t7		1	ms

Note: Current Fall Time from trip dependent on magnitude of overload

Figure 3 - Mechanical Dimensions

All dimensions are in inches

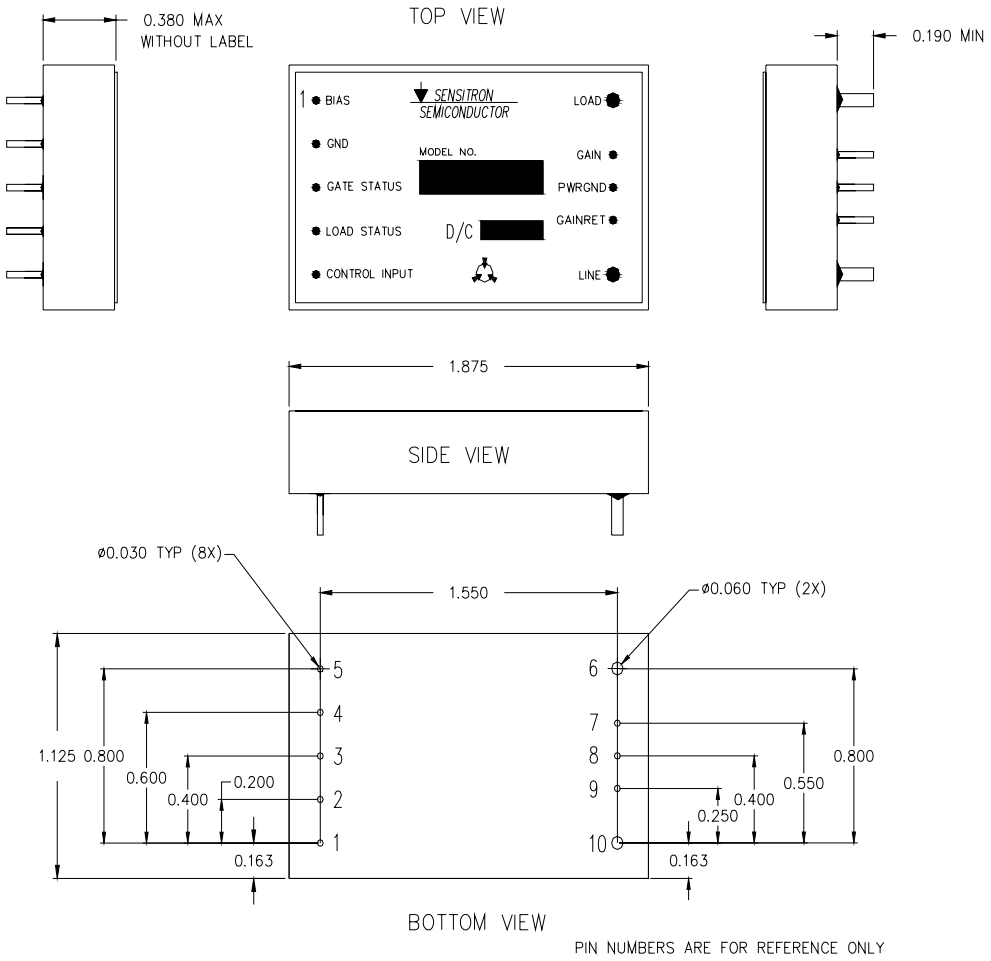

Table 4 - Pin Definitions

Pin Number	Pin Name	Function
1	BIAS	+5V DC Supply
2	GND	5V Return
3	GATE Status	Switch Status
4	LOAD Status	Load Current Detection
5	CONTROL Input	On/Off Control
6	LINE	+28V DC Supply
7	GAINRET	Internally connected to LOAD (pin 10)
8	PWRGND	28V Return
9	GAIN	Gain Adjust
10	LOAD	Load Connection

Table 5 – Individual Model Ratings

SPDP05D28ER

	SPDP05D28ER Set for 1.0 Amp Rating	SPDP05D28ER Set for 2.5 Amp Rating	SPDP05D28ER Set for 5 Amp Rating
Current Rating @ 100°C	1.0A	2.5A	5A
Power Dissipation (including Control Power)	0.18W typ @ 0.6A 25°C 0.19W max @ 1A 25°C 0.19W max @ 1A 100°C	0.21W typ @ 1.5A 25°C 0.27W max @ 2.5A 25°C 0.28W max @ 2.5A 100°C	0.31W typ @ 3A 25°C 0.54W max @ 5A 25°C 0.59W max @ 5A 100°C
Max Voltage Drop	9mV typ @ 0.6A 25°C 15mV max @ 1A 25°C 17mV max @ 1A 100°C	22mV typ @ 1.5A 25°C 36mV max @ 2.5A 25°C 42mV max @ 2.5A 100°C	44mV typ @ 3A 25°C 73mV max @ 5A 25°C 83mV max @ 5A 100°C

SPDP10D28ER

	SPDP10D28ER Set for 2.0 Amp Rating	SPDP10D28ER Set for 5 Amp Rating	SPDP10D28ER Set for 10 Amp Rating
Current Rating @ 100°C	2.0A	5A	10A
Power Dissipation (including Control Power)	0.19W typ @ 1.2A 25°C 0.21W max @ 2A 25°C 0.22W max @ 2A 100°C	0.26W typ @ 3A 25°C 0.41W max @ 5A 25°C 0.47W max @ 5A 100°C	0.52W typ @ 6A 25°C 1.13W max @ 10A 25°C 1.34W max @ 10A 100°C
Max Voltage Drop	11mV typ @ 1.2A 25°C 19mV max @ 2A 25°C 23mV max @ 2A 100°C	29mV typ @ 3A 25°C 48mV max @ 5A 25°C 58mV max @ 5A 100°C	57mV typ @ 6A 25°C 95mV max @ 10A 25°C 117mV max @ 10A 100°C

SPDP15D28ER

	SPDP15D28ER Set for 3.0 Amp Rating	SPDP15D28ER Set for 7.5 Amp Rating	SPDP15D28ER Set for 15 Amp Rating
Current Rating @ 100°C	3.0A	7.5A	15A
Power Dissipation (including Control Power)	0.20W typ @ 1.8A 25°C 0.24W max @ 3A 25°C 0.26W max @ 3A 100°C	0.33W typ @ 4.5A 25°C 0.60W max @ 7.5A 25°C 0.72W max @ 7.5A 100°C	0.78W typ @ 9A 25°C 1.87W max @ 15A 25°C 2.35W max @ 15A 100°C
Max Voltage Drop	14mV typ @ 1.8A 25°C 23mV max @ 3A 25°C 29mV max @ 3A 100°C	34mV typ @ 4.5A 25°C 56mV max @ 7.5A 25°C 73mV max @ 7.5A 100°C	68mV typ @ 9A 25°C 113mV max @ 15A 25°C 145mV max @ 15A 100°C

TECHNICAL DATA
DATASHEET 5023, Rev -

SPDP20D28ER

	SPDP20D28ER Set for 4.0 Amp Rating	**SPDP20D28ER Set for 10 Amp Rating**	**SPDP20D28ER Set for 20 Amp Rating**
Current Rating @ 100°C	4.0A	10A	20A
Power Dissipation (including Control Power)	0.21W typ @ 2.4A 25°C 0.26W max @ 4A 25°C 0.28W max @ 4A 100°C	0.36W typ @ 6A 25°C 0.70W max @ 10A 25°C 0.83W max @ 10A 100°C	0.93W typ @ 12A 25°C 2.28W max @ 20A 25°C 2.80W max @ 20A 100°C
Max Voltage Drop	13mV typ @ 2.4A 25°C 21mV max @ 4A 25°C 26mV max @ 4A 100°C	32mV typ @ 6A 25°C 53mV max @ 10A 25°C 65mV max @ 10A 100°C	63mV typ @ 12A 25°C 105mV max @ 20A 25°C 131mV max @ 20A 100°C

SPDP25D28ER

	SPDP25D28ER Set for 5.0 Amp Rating	**SPDP25D28ER Set for 12.5 Amp Rating**	**SPDP25D28ER Set for 25 Amp Rating**
Current Rating @ 100°C	5.0A	12.5A	25A
Power Dissipation (including Control Power)	0.21W typ @ 3A 25°C 0.28W max @ 5A 25°C 0.31W max @ 5A 100°C	0.41W typ @ 7.5A 25°C 0.84W max @ 12.5A 25°C 1.04W max @ 12.5A 100°C	1.13W typ @ 15A 25°C 2.84W max @ 25A 25°C 3.64W max @ 25A 100°C
Max Voltage Drop	13mV typ @ 3A 25°C 21mV max @ 5A 25°C 28mV max @ 5A 100°C	32mV typ @ 7.5A 25°C 53mV max @ 12.5A 25°C 69mV max @ 12.5A 100°C	64mV typ @ 15A 25°C 107mV max @ 25A 25°C 139mV max @ 25A 100°C

SPDP30D28ER

	SPDP30D28ER Set for 6.0 Amp Rating	**SPDP30D28ER Set for 15 Amp Rating**	**SPDP30D28ER Set for 30 Amp Rating**
Current Rating @ 100°C	6.0A	15A	30A
Power Dissipation (including Control Power)	0.23W typ @ 3.6A 25°C 0.33W max @ 6A 25°C 0.37W max @ 6A 100°C	0.52W typ @ 9A 25°C 1.13W max @ 15A 25°C 1.42W max @ 15A 100°C	1.55W typ @ 18A 25°C 4.01W max @ 30A 25°C 5.16W max @ 30A 100°C
Max Voltage Drop	15mV typ @ 3.6A 25°C 26mV max @ 6A 25°C 33mV max @ 6A 100°C	38mV typ @ 9A 25°C 64mV max @ 15A 25°C 83mV max @ 15A 100°C	77mV typ @ 18A 25°C 123mV max @ 30A 25°C 166mV max @ 30A 100°C

Figure 5 - Electrical Block Diagram

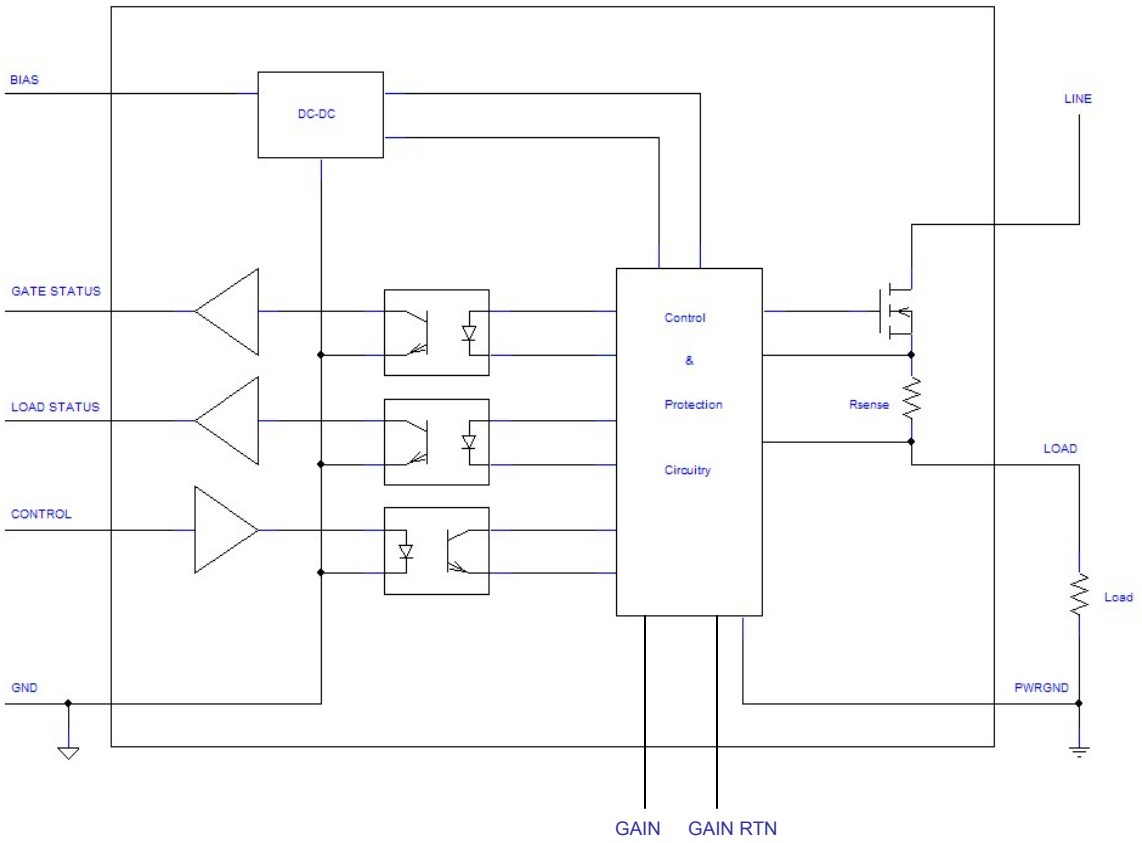

Description

Figure 5 shows the block diagram of the SPDPXXD28ER SSPC Series. It uses a SN74LVC3G14 device for digital I/O. This TTL compatible device has a Schmitt-Trigger input to minimize the effects of noise on the input. Its outputs can each drive more than 10 standard TTL loads. It's also compatible with CMOS inputs and outputs. The SN74LVC3G14 is isolated from the remainder of the module circuitry by three optocouplers.

The block labeled "Control & Protection Circuitry" gets power from the DC-DC converter and is referenced to the output of the SSPC. This block contains an amplifier to gain up the voltage developed across the sense resistor. It also contains a microcontroller with on-board timers, A/D converter, clock generator and independent watchdog timer. The microcontroller implements a precision I^2t protection curve as well as an Instant Trip function to protect the wiring and to protect itself. It performs all of the functions of multiple analog comparators and discrete logic in one high-reliability component.

The "Control & Protection Circuitry" block also has the ability to adjust the current rating of each model of the SPDPXXD28ER Series over a 5:1 range. If the "Gain" terminal is left open, the SSPC will be set for maximum rating which is 25 Amps for the SPDP25D28ER, 10 Amps for the SPDP10D28ER and so on. If the "Gain" terminal is connected directly to the "Gain Return" terminal, the SSPC will be set for 1/5 of the maximum rating. Furthermore, a resistor connected between the "Gain" terminal and the "Gain Return" terminal will set a rating between maximum and 1/5 of maximum. See Figures 10 – 12 for the relationship between rating and resistor value for each model.

The code programmed in the microcontroller acquires the output of the internal A/D converter, squares the result and applies it to a simulated RC circuit. It checks the output of the simulated circuit to determine whether or not to trip (turn off the power Mosfets). Because the microcontroller simulates an analog RC circuit, the SSPC has 'thermal memory'. That is, it trips faster if there had been current flowing prior to the overload than if there hadn't been current flowing. This behavior imitates thermal circuit breakers and better protects the application's wiring since the wiring cannot take as much an overload if current had been flowing prior to the overload.

The watchdog timer operates from its own internal clock so a failure of the main clock will not stop the watchdog timer. The code programmed in the microcontroller will periodically reset the watchdog timer preventing it from timing out. If the code malfunctions for any reason, the watchdog timer is not reset and it times out. When the watchdog timer times out, it resets the microcontroller. Since the code is designed to detect levels and not edges, the output of the module, and therefore the output of the SPDPXXD28ER, immediately reflects the command on its input.

The Power Mosfets used in the SPDPXXD28ER Series have been selected for very low $R_{ds(on)}$ and results in low voltage drop and low power dissipation. In most applications, the SPDPXXD28ER will be operated at 50 – 60% of rated current to provide a safety margin. As can be seen in Table 1, when the SPDP25D28ER is operated at 15 Amps, 60% of rated current, it only dissipates 1.0 Watt at room temperature. No heat sinking is required for this condition. However, if the SPDP25D28ER is to be operated at maximum rating and/or at elevated temperatures, the dissipation can exceed 4 Watts and heat sinking is required. Some heat sinking can be accomplished by adding copper area to the LINE and LOAD pins, a heatsink can be epoxy attached to the surface of the module or a flat copper or aluminum heatsink can be sandwiched between the SPDP25D28ER and the printed circuit board using a thermal pad to maximize heat transfer. Each application should be evaluated at maximum expected constant current. The lower current models in the SPDPXXD28ER Series do not require heat sinking under all conditions.

For overloads, no heat sinking is required provided the SPDPXXD28ER Series is allowed some time to cool down. The SPDPXXD28ER has sufficient thermal mass that the temperature will rise only a few degrees under the worst-case overload. Repetitive overloads should be avoided. When the SPDPXXD28ER reports a trip condition, the controller driving the SPDPXXD28ER should allow no more than four repetitions and then allow thirty seconds to cool down before trying to turn on again.

The SPDPXXD28ER will trip on overloads in the ALWAYS TRIP region shown in Figure 1 and will never trip when in the NEVER TRIP region. The SPDPXXD28ER can be reset by bringing the CONTROL pin to a logic low. When the CONTROL pin is brought back to logic high, the SPDPXXD28ER will turn back on. If the overload is still present, the SPDPXXD28ER will trip again. Cycling the 5 Volt BIAS power will also reset the SPDPXXD28ER. If the CONTROL pin is at logic high when the BIAS power is cycled, the SPDPXXD28ER will turn back on when the BIAS power is re-applied.

Status Outputs

The LOAD and GATE status outputs of the SPDPXXD28ER show whether or not the load is drawing current and Power Mosfet switch is on. A logic high on the LOAD status output shows that the load draws $\leq$ 5% of rated load and a logic low shows that the load draws $\geq$ 15% of rated current. A load that draws between 5% and 15% of rated current could result in either a high or low logic level on the LOAD status output. Logic high on the GATE output indicates that the Power Mosfet switch is on while a logic low indicates that the switch is off.

As can be seen in Table 6, of the 8 possible states for the combination of CONTROL, LOAD and GATE, only 3 states represent valid SSPC operation. The other 5 states indicate either a failed SSPC or, more likely, a short to ground or a short to the BIAS supply of one of the logic outputs. By comparing the CONTROL input with the LOAD and GATE outputs, the user can determine whether or not the load is supposed to be ON (GATE), whether or not it's drawing current (GATE) and whether or not the LOAD and GATE outputs are valid responses to the CONTROL input.

Table 6 – CONTROL, LOAD & GATE Truth Table

State	CONTROL	LOAD	GATE	Comments
1	L	L	L	SSPC failure or shorted LOAD output to ground
2	L	L	H	SSPC failure
3	L	H	L	Normal OFF condition
4	L	H	H	SSPC failure or shorted GATE output to BIAS supply
5	H	L	L	SSPC failure or shorted GATE output to ground
6	H	L	H	Normal ON condition with load current > 15% rated current
7	H	H	L	Tripped
8	H	H	H	Normal ON condition with load current < 5% rated current

Wire Size

MIL-W-5088L has a chart the shows wire size as a function of wire temperature and current. This chart is for a single copper wire in free air. For an ambient temperature of 70 ^{o}C, the chart allows an 18-gauge wire to handle 25 Amps continuously at a wire temperature of 200 ^{o}C – a wire temperature rise of 130 ^{o}C. For a wire temperature limited to 150 ^{o}C, the chart requires a 16-gauge wire and for a wire temperature of 105 ^{o}C, the chart requires a 14-gauge wire.

Amendment 1 of MIL-W-5088L has a table for copper wire in a bundle, group or harness with condition on the number of wires, percent of total harness capacity, etc. This table shows that a 12 gauge wire is necessary for 200 ^{o}C operation, 10-gauge for 150 ^{o}C and 8-gauge for 105 ^{o}C.

MIL-W-5088L has various figures showing derating for harnesses as a function of the number of current carrying conductors for different altitudes. MIL-W-5088L only specifies wire for DC or RMS AC conditions, not for transient or overload conditions. MIL-W-5088L and its amendment should be consulted to determine minimum wire sizes for other currents and conditions.

For transient or overload conditions, the transient or overload happens so quickly that heat is not transferred from the wire to the surroundings. The heat caused by the I^2R heating of the wire causes the temperature to rise at a linear rate controlled by the heat capacity of the wire. The equation for this linear rise in temperature, with respect to time, can be solved as: I^2t = constant. Every wire has an I^2t rating that's dependent on the temperature rise allowed and the diameter of the wire. If the I^2t rating of the SSPC or circuit breaker is less than the I^2t rating of the wire, then the SSPC or circuit breaker can protect the wire. The maximum I^2t rating for the SPD2P05D28ER is 7.45×10^3 Amp^2-Seconds. Every wire size in the paragraphs above has an I^2t rating that exceeds the SPDP25D28ER I^2t rating for the temperature rises stated. Therefore, to select a wire size, it's simply a matter of determining the maximum temperature rise of the application and deciding whether or not the wire will be in a bundle and use the information above. Similarly, the I^2t ratings for the SPDP12D28ER and SPDP05D28ER are 1.72×10^3 Amp^2-Seconds and 300 Amp^2-Seconds, respectively.

Application Connections

The SPDPXXD28ER Series may be configured as a high-side or low-side switch and may be used in positive or negative supply applications.

Figure 6 – High-Side Switch, Positive Supply

Figure 6 shows the connections as a high-side switch with a positive power supply.

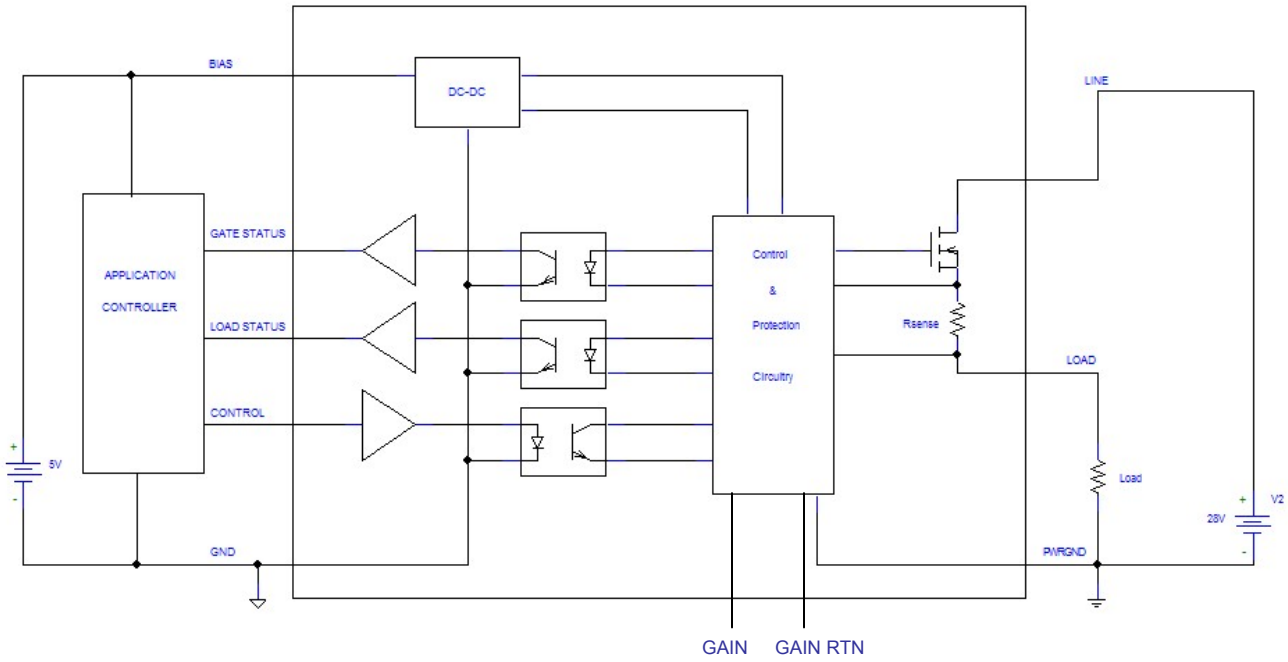

Figure 7 – Low-Side Switch, Positive Supply

Figure 7 shows a low-side switch with a negative power supply. Note that the PWRGND pin is now connected to the LINE pin (see Rise/Fall Time paragraph below for more information on the PWRGND pin).

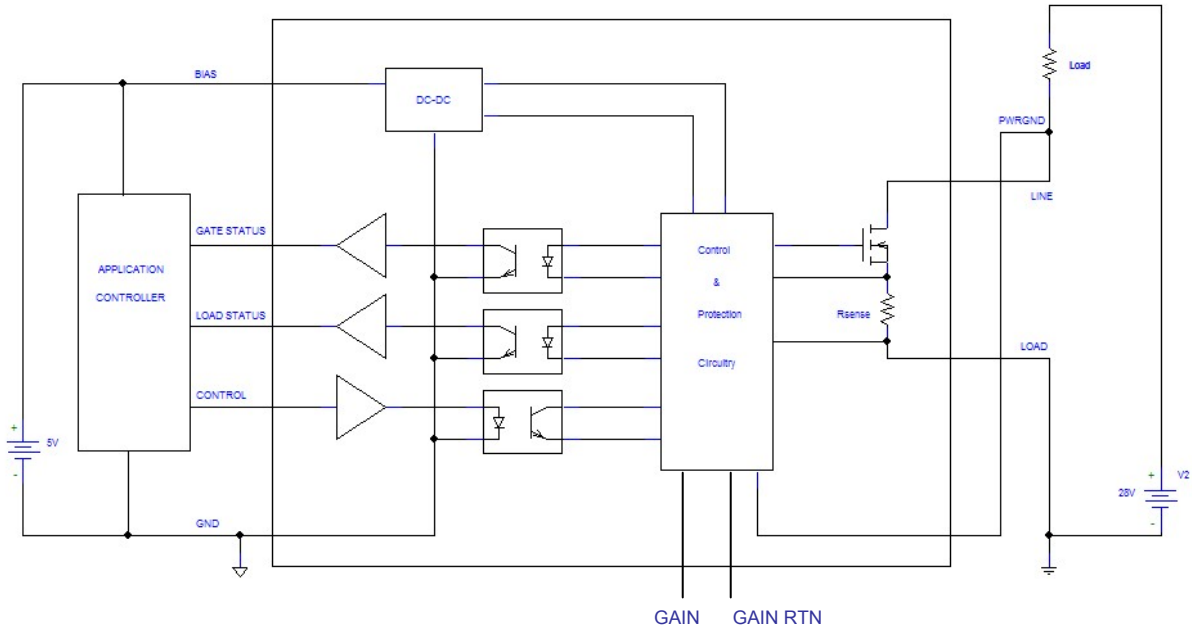

Figures 8 and Figure 9 show negative supply high-side switch and low-side switch implementations. Again, note the connection of the PWRGND pin.

Figure 8 – High Side Switch, Negative Supply

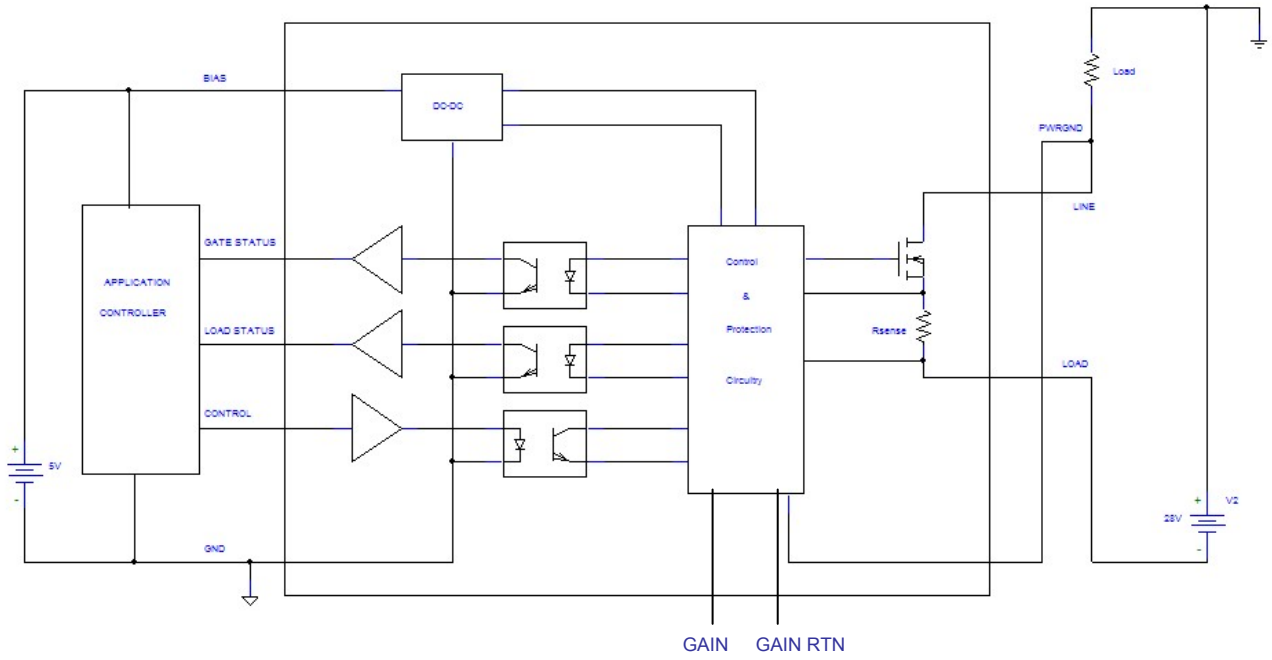

Figure 9 – Low Side Switch, Negative Supply

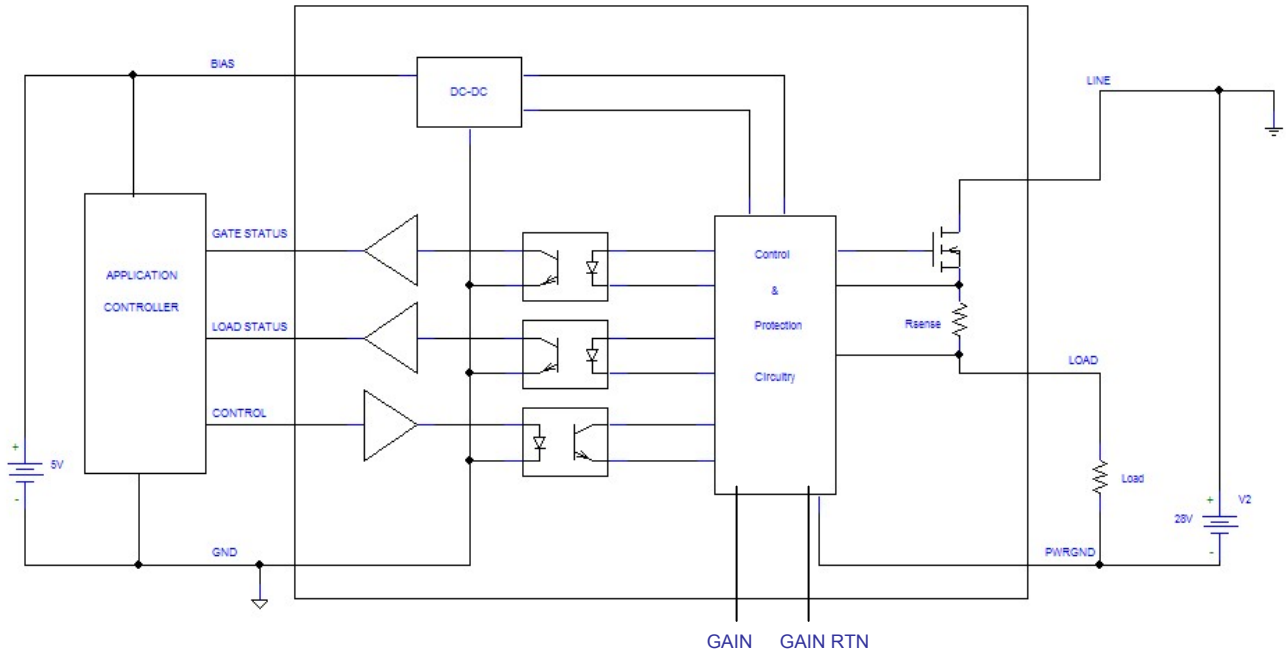

Rise Time & Fall Time

The rise and fall times of the SPDPXXD28ER are pre-set at the factory for a nominal 100μS with a LINE supply of 28VDC (see Table 3 for min/max limits). The rise and fall times will vary linearly with supply voltage. The PWRGND pin is used to control the rise and fall times. If the PWRGND pin is left open, the rise and fall times will be about 50uS. Leaving the PWRGND pin open can be useful when a faster rise or fall time is desirable.
With the PWRGND pin connected as in Figures 6 through 9, the SPDPXXD28ER, when set for a 25 Amp rating, can turn on into a capacitive load of 440uF, min, 880uF, typ, without tripping for any power supply voltage within the ratings. The capacitive load capability is proportional to current rating and can be therefore easily calculated for each model and setting in the SPDPXXD28ER Series.

Wiring and Load Inductance

Wiring inductance can cause voltage transients when the SPDPXXD28ER is switched off due to an overload. Generally, these transients are small but must be considered when long wires are used on either the LINE or LOAD pins or both. A 10 foot length of wire in free air will cause a transient voltage of about 10 Volts when the SPDP25D28ER trips at an Instant Trip level of 250 Amps. At the rated load current of 25 Amps, the voltage transient will be about 1 Volt. If longer wire lengths are used, a transient suppressor may be used at the LINE pin and a power diode may be used at the LOAD pin so that the total voltage between the LINE and LOAD pins is less than 50 Volts.
When powering inductive loads, the negative voltage transient at the LOAD pin can cause the voltage between LINE and LOAD to exceed the SPDPXXD28ER rating of 50 Volts and a power diode from the LOAD pin to ground must be used. The cathode of the power diode is connected to the LOAD pin with the anode connected to ground. The power diode must be able to carry the load current when the SPDPXXD28ER switches off. Voltage transients due to wiring or load inductance are proportional to the operating current. Therefore, transients are less of a problem for the SPDP12D28ER and SPDP05D28ER Models and even the SPDP25D28ER Model when set to a 12.5 Amp rating.

Paralleling

For example, putting two SPDP25D28ERs in parallel will not double the rating to 50 Amps. Due to differences in the $R_{ds(on)}$ of the Power Mosfets in the SSPCs, the current will not share equally. In addition, there are unit-to-unit differences in the trip curves so that two SPDP25D28ERs in parallel may possibly trip at 35 Amps. Also, both SPDP25D28ERs will not trip together; the SPDP25D28ER carrying the higher current will trip first followed by the other SPDP25D28ER. Multiple SPDP25D28ERs may be used in parallel as long as these complexities are appreciated. Due not parallel different models of this series as the current sharing will not be predictable.

Board Layout

The current-carrying power circuit should be kept well away from the control circuit and other low-level circuits in the system. It's unlikely, but possible, that magnetic coupling could affect the control circuit when turning normal loads on and off. However, in the case of an overload, the magnetic coupling could be 10 times greater than with normal loads. Effects of such coupling could cause 'chattering' when turning on and off, oscillation, and the possibility of turning the SPDPXXD28ER back on after an overload. The SPDPXXD28ER Series is a Trip-Free device. Once tripped it will not turn back on until reset and commanded on again. Reset is accomplished by bringing the CONTROL pin low and turning the SSPC back on is accomplished by bringing the CONTROL pin high. Sufficient magnetic coupling between the current-carrying power circuit and the control circuit can negate the Trip-Free characteristic.

MIL-STD-704F and MIL-STD-1275B

These standards cover the characteristics of the electrical systems in Military Aircraft and Vehicles. The SPDPXXD28ER Series meets all of the requirements of MIL-STD-704F including Normal, Emergency, Abnormal and Electric Starting conditions with the Ripple, Distortion Factor and Distortion Spectrum defined in the standard. The SPDPXXD28ER Series also meets all of the requirements of MIL-STD-1275B including operation with Battery and Generator, Generator Only and Battery Only for all of the conditions described in the standard including Cranking, Surges, Spikes and Ripple. In addition, the SPDPXXD28ER Series can withstand ± 600 V spikes for 10μS. This capability is beyond that required by the standards cited above.

Figure 10 – SPDPxxD28ER
Rating vs. "Gain" and "Gain Return" Terminals

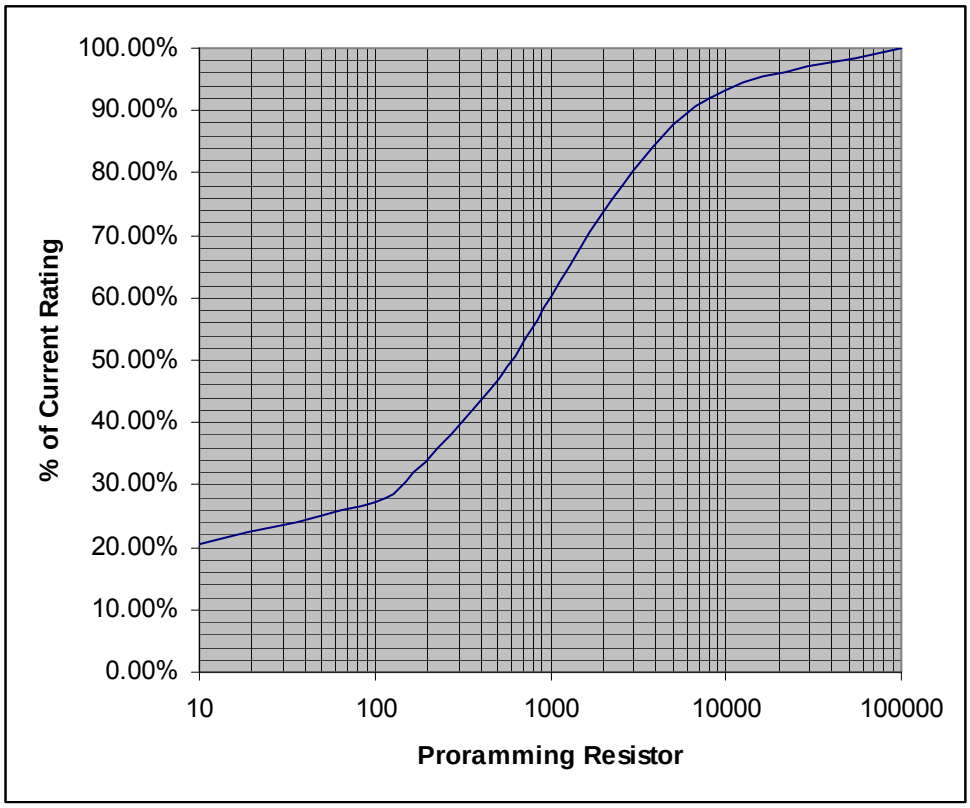

DISCLAIMER:
1- The information given herein, including the specifications and dimensions, is subject to change without prior notice to improve product characteristics. Before ordering, purchasers are advised to contact the Sensitron Semiconductor sales department for the latest version of the datasheet(s).
2- In cases where extremely high reliability is required (such as use in nuclear power control, aerospace and aviation, traffic equipment, medical equipment , and safety equipment) , safety should be ensured by using semiconductor devices that feature assured safety or by means of users' fail-safe precautions or other arrangement .
3- In no event shall Sensitron Semiconductor be liable for any damages that may result from an accident or any other cause during operation of the user's units according to the datasheet(s). Sensitron Semiconductor assumes no responsibility for any intellectual property claims or any other problems that may result from applications of information, products or circuits described in the datasheets.
4- In no event shall Sensitron Semiconductor be liable for any failure in a semiconductor device or any secondary damage resulting from use at a value exceeding the absolute maximum rating.
5- No license is granted by the datasheet(s) under any patents or other rights of any third party or Sensitron Semiconductor.
6- The datasheet(s) may not be reproduced or duplicated, in any form, in whole or part, without the expressed written permission of Sensitron Semiconductor.
7- The products (technologies) described in the datasheet(s) are not to be provided to any party whose purpose in their application will hinder maintenance of international peace and safety nor are they to be applied to that purpose by their direct purchasers or any third party. When exporting these products (technologies), the necessary procedures are to be taken in accordance with related laws and regulations.