Series SPD73 & SPD74

Shielded Surface Mount Inductors

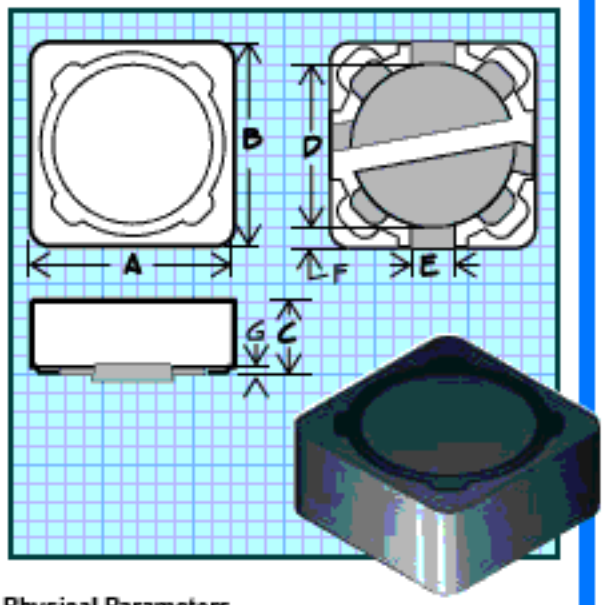

Physical Parameters

	Inches	Millimeters
A	0.287 ± .020	7.3 ± 0.5
B	0.287 ± .020	7.3 ± 0.5
C	0.185 max.	4.7 max. (Series SPD74)
C	0.153 max.	3.9 max.(Series SPD73)
D	0.200 ± 0.020	5.0 ± 0.5
E	0.088 ± 0.020	2.2 ± 0.5
F	0.042 ± 0.020	1.0 ± 0.5
G	0.015 Ref. only	0.38 Ref. only

Mechanical Configuration Units designed for surface mounting; ferrite core and ferrite sleeve

Terminals are Solderable More than 95% new solder coverage when subjected to soldering temperature

Operating temperature range –55°C to +125°C

Application Frequency Range
Values 1.2µH to 10µH to 1.0 MHz Min.
Values above 10µH to 300 KHz Min.

Current Rating at 25°C Ambient The maximum DC current that will cause a 40°C maximum temperature rise and where the inductance will not decrease by more than 10% from its zero DC value

Packaging Tape & reel (16mm):
13" reel, 1000 pieces max.; 7" reel not available

PART NUMBER	INDUCTANCE (µH) ± 20%	TEST FREQUENCY (KHz)	DC RESISTANCE MAXIMUM (Ohms)	CURRENT RATING MAXIMUM (Amps)
SERIES SPD73				
SPD73-122M	1.2	100	0.02	5.30
SPD73-242M	2.4	100	0.032	4.50
SPD73-352M	3.5	100	0.035	4.00
SPD73-472M	4.7	100	0.050	3.50
SPD73-682M	6.8	100	0.065	3.00
SPD73-103M	10	100	0.067	2.50
SPD73-123M	12	1.0	0.080	2.25
SPD73-153M	15	1.0	0.091	2.00
SPD73-183M	18	1.0	0.14	1.80
SPD73-223M	22	1.0	0.19	1.75
SPD73-273M	27	1.0	0.21	1.60
SPD73-333M	33	1.0	0.24	1.35
SPD73-393M	39	1.0	0.32	1.25
SPD73-473M	47	1.0	0.36	1.16
SPD73-563M	56	1.0	0.47	1.10
SPD73-683M	68	1.0	0.52	1.05
SPD73-823M	82	1.0	0.69	0.95
SPD73-104M	100	1.0	0.79	0.85
SPD73-124M	120	1.0	0.84	0.80
SPD73-154M	150	1.0	0.89	0.70
SPD73-184M	180	1.0	1.45	0.62
SPD73-224M	220	1.0	1.65	0.57
SPD73-274M	270	1.0	2.31	0.52
SPD73-334M	330	1.0	2.62	0.50
SPD73-394M	390	1.0	2.94	0.48
SPD73-474M	470	1.0	4.18	0.38
SPD73-564M	560	1.0	4.67	0.35
SPD73-684M	680	1.0	5.73	0.31
SPD73-824M	820	1.0	6.54	0.30
SPD73-105M	1000	1.0	9.44	0.26
SERIES SPD74				
SPD74-122M	1.2	100	0.025	8.0
SPD74-242M	2.4	100	0.03	5.50
SPD74-352M	3.5	100	0.034	5.0
SPD74-472M	4.7	100	0.038	3.70
SPD74-682M	6.8	100	0.042	3.50
SPD74-103M	10	100	0.049	2.50
SPD74-123M	12	1.0	0.058	2.40
SPD74-153M	15	1.0	0.081	2.30
SPD74-183M	18	1.0	0.091	2.15
SPD74-223M	22	1.0	0.11	2.00
SPD74-273M	27	1.0	0.15	1.70
SPD74-333M	33	1.0	0.17	1.50
SPD74-393M	39	1.0	0.23	1.35
SPD74-473M	47	1.0	0.26	1.30
SPD74-563M	56	1.0	0.35	1.20
SPD74-683M	68	1.0	0.38	1.10
SPD74-823M	82	1.0	0.43	1.04
SPD74-104M	100	1.0	0.61	0.86
SPD74-124M	120	1.0	0.66	0.84
SPD74-154M	150	1.0	0.88	0.70
SPD74-184M	180	1.0	0.98	0.68
SPD74-224M	220	1.0	1.17	0.60
SPD74-274M	270	1.0	1.64	0.55
SPD74-334M	330	1.0	1.86	0.50
SPD74-394M	390	1.0	2.85	0.45
SPD74-474M	470	1.0	3.01	0.40
SPD74-564M	560	1.0	3.62	0.37
SPD74-684M	680	1.0	4.63	0.34
SPD74-824M	820	1.0	5.2	0.31
SPD74-105M	1000	1.0	6.0	0.26