Switching Power Supply
Type SPD 10W
DIN rail mounting



- **Universal AC input full range**
- **Installation on DIN rail 7.5 or 15mm**
- **Short circuit protection**
- **Overload protection**
- **High efficiency**
- **LED indicator for DC power ON**
- **LED indication for DC low**
- **Power Ok output**
- **Internal input filter**
- **CE, TUV approved and cULus Listed**

Product Description

The Switching power supplies SPD series are specially designed to be used in all automation application where the installation is on a DIN rail and compact dimensions and performance are a must.

Ordering Key

SP D 24 10 1 B

- **Model**
- **Mounting (D = Din rail)**
- **Output voltage**
- **Output power**
- **Input Type**
- **Optional features**

Input type: 1= single phase

Approvals

Class I, Div 2 — UL 1310 — UL 60950-1

Optional Features

Description	Code
Spring connectors	B

Output Performances

MODEL NO.	INPUT VOLTAGE	OUTPUT WATTAGE	OUTPUT VOLTAGE	OUTPUT CURRENT	EFF. (min.)	EFF. (typ.)
Single Output Models						
SPD05	90~264 VAC	10 WATTS	+ 5 VDC	2000 mA	71%	73%
SPD12	90~264 VAC	10 WATTS	+12 VDC	840 mA	73%	75%
SPD15	90~264 VAC	10 WATTS	+15 VDC	670 mA	74%	76%
SPD24	90~264 VAC	10 WATTS	+24 VDC	420 mA	74%	76%

Output Data

Line regulation		± 1%
Load regulation		± 2%
Minimum load		0
Turn on time (full resistive load)		1000ms
Vi nom, Io nom with 3500µF		1500ms
Transient recovery time		2ms
Ripple and noise		50mVpp
Output voltage accuracy		+ 1%
Temperature coefficient		± 0.03%/°C
Hold up time	**Vi= 115VAC**	25ms
	Vi= 230VAC	100ms
Voltage fall time (I_0nom)		150ms max

Rated continuous loading	
5V Model	2A @ 5VDC/1.7A @ 5.75VDC
12V Model	0.84A@12VDC/0.72A@13.8VDC
15V Model	0.67A @ 15VDC/0.58A @ 17.25VDC
24V Model	0.42A @ 24VDC/0.34A @ 28.8VDC
Reverse voltage	
5V Model	7.5VDC
12V Model	18VDC
15V Model	22VDC
24V Model	35VDC
Capacitor load	3500µF
Voltage rise time at (full resistive load)	500ms
Vi nom, Io nom with 3500µF	150ms

Specifications are subject to change without notice. Pictures are just an example. For special features and/or customization, please ask to our sales network. 18/04/12

CARLO GAVAZZI

Input Data

Rated input voltage		100 - 240VAC
Voltage range		
	AC	90 - 264VAC
	DC	120 - 375VDC
Rated input current		
(Vi : 115VAC, Io nom)	**Typ.**	200mA
	Max.	300mA
Inrush current		
	Vi= 115VAC	10A
	Vi= 230VAC	18A

Power dissipation		
(Vi : 230VAC, Io nom)	**5V Model**	4.0W
	12V Model	3.4W
	15V Model	3.3W
	24V Model	2.8W
Frequency range		47- 63Hz
Leakage current		
	Input-Output	0.25mA
	Input-FG	3.5mA

Controls and Protections

Overload	110 – 145%
Input fuse	T2A/250VAC internal[1)]
Output short circuit	Hiccup mode

Over voltage protection	125-145%
Internal surge voltage protection (IEC 61000-4-5)	Varistor

[1)] Fuse not replaceable by user

General Data (@ nominal line, full load, 25°C)

Ambient temperature	-20°C to 71°C
Derating (>61°C to +71°C)	2.5%/°C
Ambient humidity	20 ~ 95%RH
Storage	-25°C to +85°C
Protection degree	IP20
Cooling	Free air convection
Insulation voltage	
Input-Output	3.000VAC/4242VDC min
Input-FG	1.500VAC/2121VDC min
Insulation resistance I/O	100MΩ min (@ 500VDC)

MTBF (Bellcore issue 6 @ 40°C, GB)	
5V Model	801000 Hours
12V Model	803000 Hours
15V Model	805000 Hours
24V Model	808000 Hours
Case material	Plastic: PC, UL94-V0
Pollution degree	2
Altitude	2000m
Dimensions LxWxD mm(inch)	90(3.60)x22.5(0,89)x114(4.49)
Weight	120g

Norms and Standards

Vibration resistance	meet IEC 60068-2-6 (Mounting by rail: 10-500Hz, 2G, along X, Y, Z each Axis, 60 min for each Axis)
Shock resistance	meet IEC 60068-2-27 (15G, 11ms, 3 Axis, 6 faces, 3 times for each face)
UL / cUL	UL508 listed, UL60950-1, UL1310 Class 2 Power Recognized, ISA 12.12.01 (Class 1, Division 2, Groups A, B, C and D)
TUV	EN 60950-1, CB scheme
CCC	GB4943, GB9254, GB17625.1

CE	EN 61000-6-3, EN 55022 Class B, EN 61000-3-2, EN 61000-3-3, EN 61000-6-2, EN 55024, EN 61000-4-2 Level 4, EN 61000-4-3 Level 3, EN 61000-4-4 Level 4, EN 61000-4-5 L-Level 3, L/N-FG Level 4, EN 61000-4-6 Level 3, EN 61000-4-8 Level 4, EN 61000-4-11, ENV 50204 Level 2, EN 61204-3

Block Diagrams

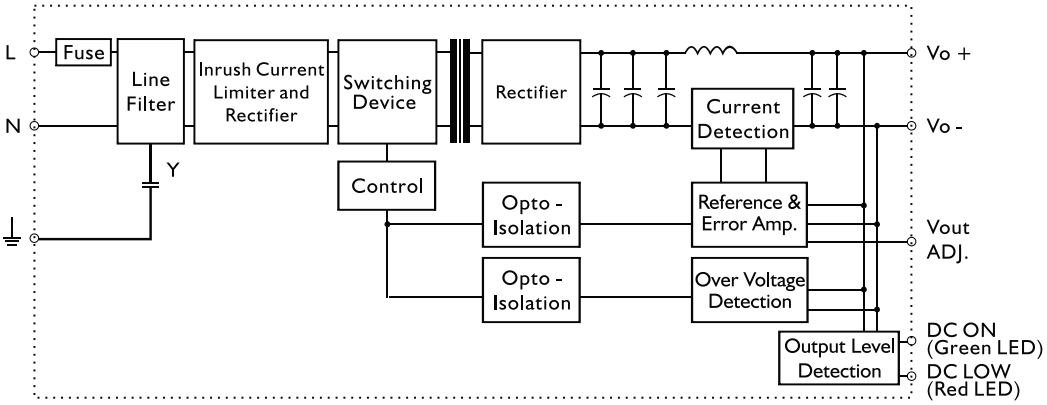

Pin Assignement and Front Controls

Pin No.	Designation	Description
1	V+	Positive output terminal
2	V-	Negative output terminal
3	⏚	Ground terminal to minimise High frequency emissions
4	N	Input terminals (neutral conductor, no polarity at DC input)
5	L	Input terminals (phase conductor, no polarity at DC input)
	ON	Operation indicator LED
	LO	DC LOW indicator LED
	Vout ADJ.	Trimmer-potentiometer for Vout adjustment

Derating Diagram

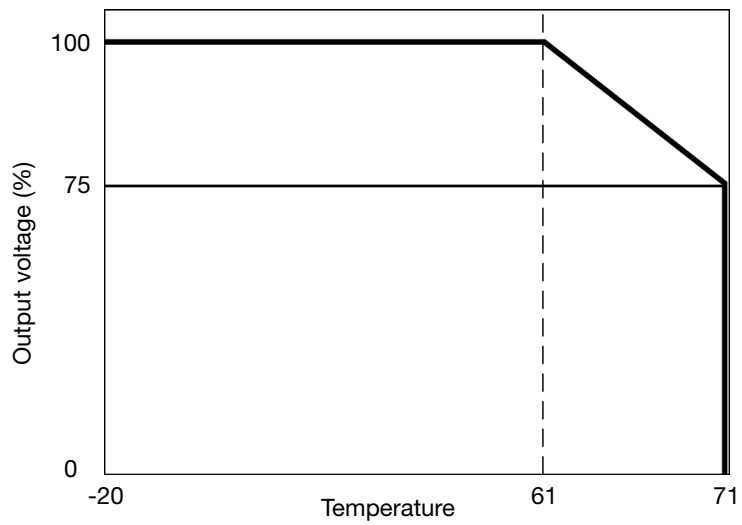

Specifications are subject to change without notice. Pictures are just an example. For special features and/or customization, please ask to our sales network. 18/04/12

Typ. Current Limited Curve

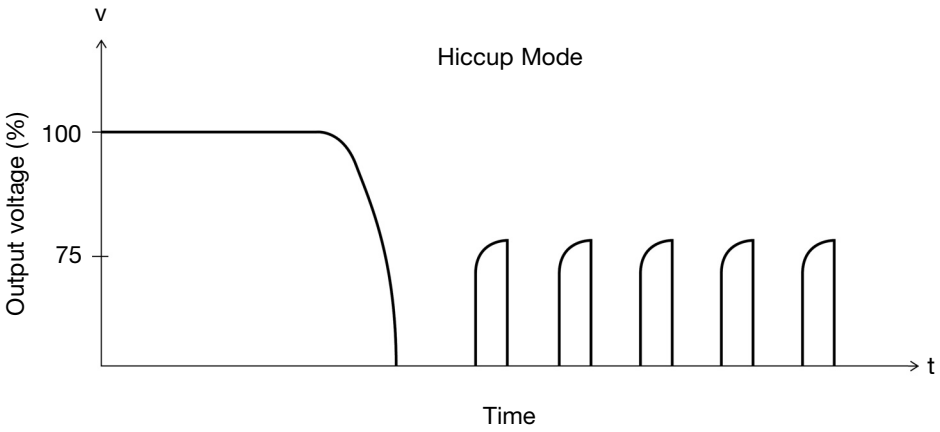

Mechanical Drawings mm (inches)

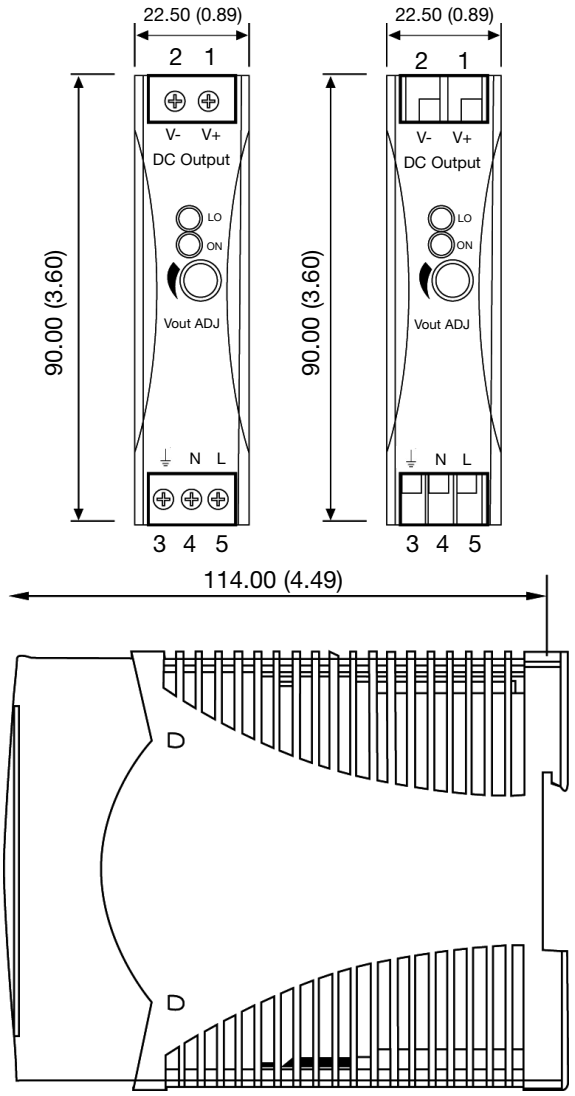

Typ. Efficiency Curve

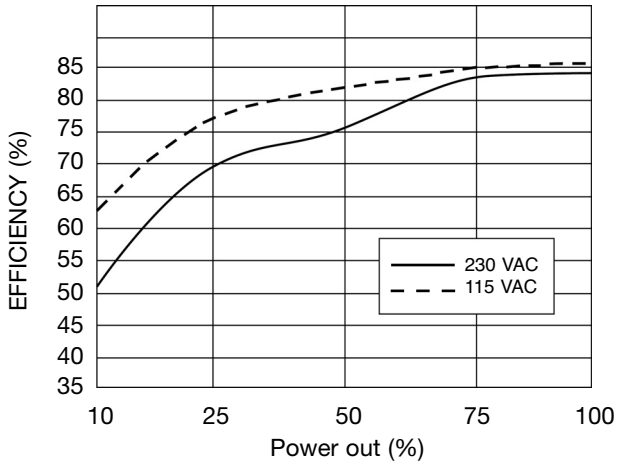

Installation

Ventilation and cooling	Normal convection All sides 25mm free space for cooling is recommended
Connector size range	
Spring terminal	AWG24-14 (0.2~2mm²) flexible/solid cable, 10mm stripping at cable and recommends use copper conductors only, 60/75°C
Screw terminal	AWG26-12 (0.2~2.5mm²) flexible/solid cable, connector can withstand torque at max 0,56Nm (5 lbs-in). 4~5 mm stripping at cable and recommends use copper conductors only, 60/75°C
Max. torque for terminal	
Input terminals	0.56Nm (5.0lb-in)
Output terminals	0.56Nm (5.0lb-in)
General tolerances mm(in.)	
0.00 (0.00) ÷ 30.00 (1.18)	±0.30 (0.01)
30.00 (1.18) ÷ 120.00 (4.72)	±0.50 (0.02)