10kA Surge Protection Device

SPD-10S-277S



EN61643-11 UL1449 TPTC004 IP66

Outdoor Streetlight

Features

- Series connection style
- UL1449 type 4 component assemblies
- Line to Ground & Line to Line protected
- 10kA maximum discharge current(I_{max}), 8/20μs
- Thermally protected
- Double insulation cable wire
- LED status indicator
- IP66 design for indoor or outdoor installations
- 10KV surge protection capability

Applications

- Outdoor and commercial LED Lighting
- Roadway lighting
- Traffic lighting
- Digital signage
- Wall wash lighting
- Parking garage/lot lighting
- Flood lighting
- Tunnel lighting
- Street lighting

Description

SPD-10S-277S thermally protected Surge Protective Device is a self-protected device which is specially designed to be used in outdoor and commercial LED lighting fixtures for transient overvoltage protection. It is constructed with thermally protected varistor technology. Its built-in thermal disconnect function provides additional protection to prevent catastrophic failure and fire hazard even under the extreme circumstances of varistor end-of-life or sustaining over voltage conditions. It also features a built-in LED indicator that notifies when replacement of the module is needed.

Model Encoding

SPD - 10S - 277 S

- Series connection
- 120 ~277VAC
- Maximum discharge current
- Series name

SPECIFICATION

MODEL	**SPD-10S-277S**
OPERATING VOLTAGE	120 ~ 277VAC 50/60Hz
MCOV/U_c Note.1 (MAX. CONTINUOUS OPERATING VOLTAGE)	320VAC
CONTINUOUS CURRENT (max.)	3.5A
MLV Note.2 (MEASURED LIMITING VOLTAGE)	L-N: 1260V L-G: 1260V N-G: 1300V
U_P Note.3 (VOLTAGE PROTECTION LEVEL)	L-N: 1400V L-G/PE: 2400V N-G/PE: 2200V
I_n(NOMINAL DISCHARGE CURRENT) Note.4	5kA, 8/20μs
$I_{max.}$ (MAX. DISCHARGE CURRENT) Note.5	10kA, 8/20μs
OPERATING TEMPERATURE	-40 ~ +85℃
SAFETY STANDARDS Note.6	UL1449(Fourth Edition), EN61643-11, EAC TP TC 004 approved
DIMENSION	46.36*56.76*26 (L*W*H)
PACKING	0.113Kg/Unit ; 0.96Kg/one box(8pcs); 6.5Kg/carton(including 5 boxs)

NOTE: 1. MCOV/U_C: Maximum Continuous Operating Voltage - maximum r.m.s. voltage that could be continuously applied to the SPD.
2. MLV: UL1449 Measured limiting voltage; the highest value of residual voltage measurements during the application of impulses of 8/20μs nominal discharge current (I_n); an average voltage value of 15 impulses.
3. U_P : IEC 61643-11 Voltage protection level; the highest value of residual voltage measurements during the application of impulses of 8/20μs nominal discharge current(In); a rounding voltage value of maximum measurement.
4. Nominal Discharge Current I_n (A): The nominal discharge current is a measure of the SPDs endurance capability; 15 impulses of discharge current uses the 8/20μs current waveform.
5. Maximum Discharge Current I_{max} (A): The maximum discharge current is a measure of the SPDs maximum capability; single impulse of discharge current uses the 8/20μs current waveform. All Devices pass maximum discharge current with possible, safe opening of thermal disconnect.
6. Tested with G/PE connection (Class I application). SPD Protection against L-G/PE, N-G/PE voltage surges cannot be achieved without connecting it to G/PE.

SPECIFICATION

SPECIFICATION	Value	Condition
Temporary Overvoltage (V) TOV UT @ t_T = 5s	403VAC	LV System Fault for TN power Grid
Temporary Overvoltage (V) TOV UT @ t_T = 120 min.	529VAC	LV System Fault for TN power Grid
Power grids	TN	
Backup fuse (A)	20A	Maximum gG Fuse
End of life indication	Yes	Optical Light ON: SPD is functional Light OFF: SPD has reached end-of-life
Max earth leakage current at Uc (μA)	50	
IEC 61643-11 Test Classification	Test Class II and III	
EN 61643-11 Type Classification	Type 2 and 3	
UL 1449 Type	4CA	

Repetitive Surge Capability

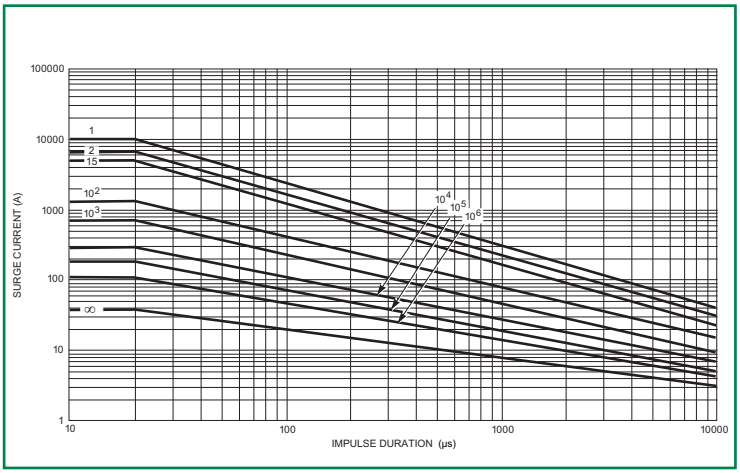

Pulse Rating (8x20μ Sec)	
Strikes	Surge
1	10,000A
2	7,000A
15	5,000A
100	1,500A
1,000	700A

■ Installation Diagram

Series Connection

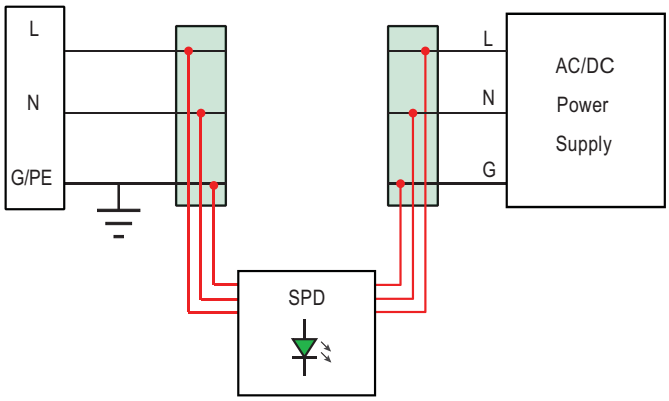

Notes:

1. Green LED light ON: SPD is good
2. Green LED light OFF: SPD needs replacement

■ Mechanical Specification

Unit:mm

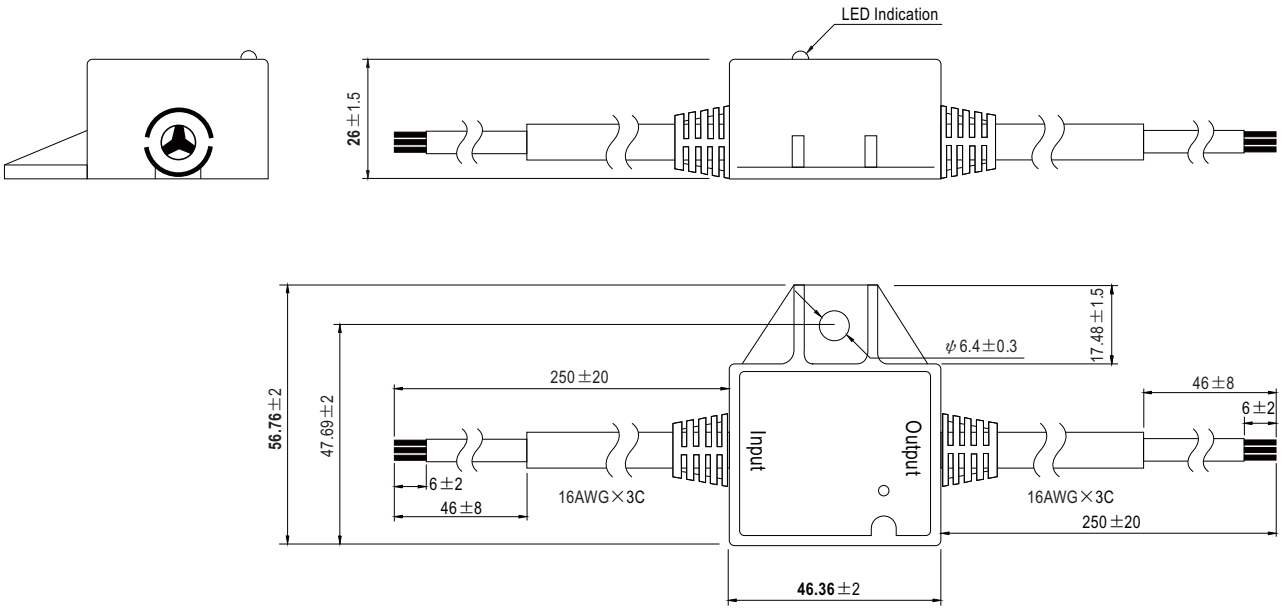

■ INSTALLATION

1. This document provides detailed information on how to install and operate the SPD-10S-277S of Surge Protective Devices(SPDs). Please refer to “Installation Diagram“.
2. The SPD-10S-277S of Surge Protective Devices are installed/connected in series with the line of TN System.
3. Before starting any installation procedures, verify service voltage(AC or DC)with a volt meter to ensure that the correct model has been selected for the supply voltage.
4. DO NOT INSTALL THE SPD IF MEASURED VOLTAGE EXCEEDS UNIT RATINGS.
5. REMOVE POWER FROM ELECTRICAL SYSTEM PRIOR TO INSTALLATION.
6. ENSURE THAT ALL CONNECTIONS ARE CORRECT BEFORE ENERGIZING.
7. Apply power(energize),LED indicator should illuminate. If LED is out, the SPD requires service.